A1

INST-26135

VENTURO

OWNER'S MANUAL

25500-PHX(-LC)

-

PARTS & INSTALLATION MANUAL

25500-PHX(-LC)

Included in this manual:

25500-PHX(-LC)

- Stabilizer with Hydraulic Pullout and Hydraulic Legs
- Available in "Less Crosstube" (-LC) configuration

VENCO VENTURO INDUSTRIES LLC
12110 BEST PLACE | CINCINNATI, OHIO 45241
800-226-2238

VENCO VENTURO INDUSTRIES LLC

This manual also available online at www.venturo.com.

25500-PHX(-LC)

INST-26135 - 10/7/2026 (Rev: A1)

7607100A	SECTION 100: DESCRIPTION & SPECIFICATIONS
25480	INSTALLATION GUIDELINES
26127	INSTALLATION DIMENSIONS - SHORT LEG
26132	INSTALLATION DIMENSIONS - LONG LEG
7607200A	SECTION 200: INSTALLATION
25484-2	RECOMMENDED MOUNTING TO TRUCK FRAME
25447-1	SELECTOR VALVE OVERVIEW
26134	HYDRAULIC MAPPING - 1 OF 2
25449	HYDRAULIC MAPPING - 2 OF 2
25485	DEPARTURE ANGLE, REAR-MOUNTED STABILIZERS
26130	MOUNTING THE LEGS
25443	LESS-CROSSTUBE ASSY - 1 OF 3
25444	LESS-CROSSTUBE ASSY - 2 OF 3
25445	LESS-CROSSTUBE ASSY - 3 OF 3
7607400A	SECTION 400: REPLACEMENT PARTS
26136	REPLACEMENT PARTS DRAWING
26137	REPLACEMENT PARTS LIST
25450	PULLOUT REPLACEMENT PARTS DRAWING
25451	PULLOUT REPLACEMENT PARTS LIST
25216	REPLACEMENT PARTS
12-00073_VNT1	WARRANTY PAGE

SECTION 100

DESCRIPTION

&

SPECIFICATIONS

VENCO VENTURO INDUSTRIES LLC
CINCINNATI, OHIO

STABILIZER INSTALLATION GUIDELINES

Read instructions completely prior to starting installation. If this unit is to be installed on a Venturo crane body, continue to the stabilizer assembly section of this manual.

Prior to mounting the stabilizer crosstube, orient the stabilizer so the longer pullout is on the crane side of the truck.

REAR MOUNTED

Crosstube should be centered at the rear of the truck and tied into the truck frame, body longsills, and crane support. Installer is responsible for proper mounting brackets and hardware that will be needed during this process. If unit is to be mounted on a service body, do not attach crosstube to body sheet metal unless otherwise specified. Allow clearance between crosstube and body for the stabilizer legs to be fully retracted. Consult chassis up-fitter guide prior to installation for proper welding and bolting procedures to chassis.

See the 'RECOMMENDED MOUNTING TO TRUCK FRAME' page

Leg installation (refer to assembly section of manual) legs are adjustable to maintain proper ground penetration of 4” to 6”. The stabilizer is designed to level the truck and not lift the chassis off of the ground. They are designed to work in conjunction with the chassis suspension to stabilize the unit with the bulk of the load being supported by the chassis suspension and tires. Tires must be set at the proper pressure according to the chassis manufacture, stabilizers fully extended, and legs deployed on firm, level ground prior to crane use.

IMPORTANT - When legs are fully retracted in the stowed position, a 15° degree departure angle between the bottom of the rear tire and the lowest point of the stabilizer is recommended.

See the 'DEPARTURE ANGLE' page

For hydraulic stabilizers, the control valve and selector valve are supplied in kit. It is the installer's responsibility to supply necessary hoses and fittings between these valves and stabilizer. Refer to proper hydraulic schematic for your particular stabilizer model.

IMPORTANT - The selector valve is designed to separate the crane and stabilizer hydraulic circuits. This will not allow stabilizer use while in crane mode.

FRONT MOUNTED

Front mounted crosstube will be located on top of the chassis frame and welded to body longsills. Additional shear plates (installer supplied) to be welded to crosstube and bolted to chassis frame. Crosstube to be spaced away from body for leg clearance when fully retracted. See assembly section of manual for pullout and leg installation detail.

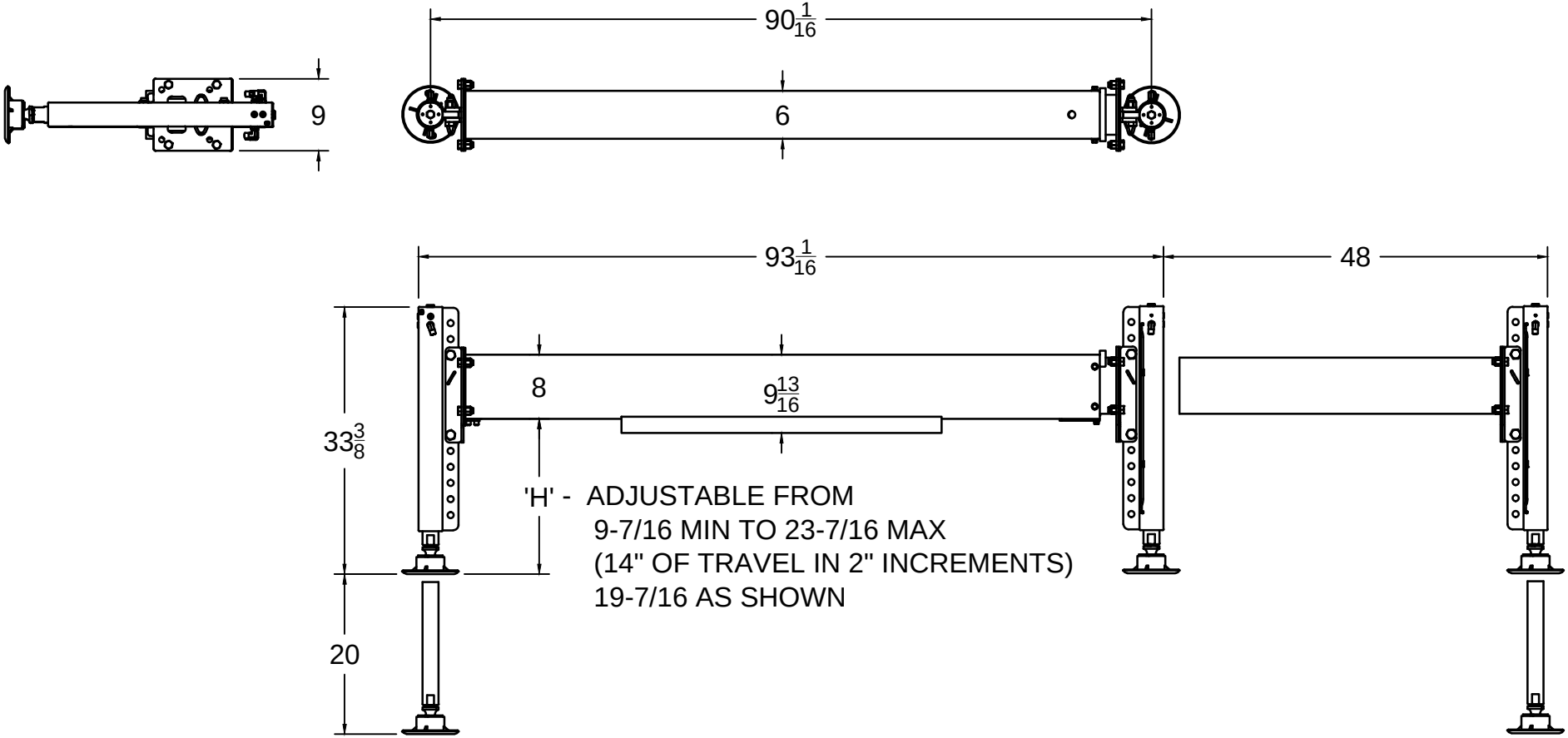

VENTURO®

VENCO VENTURO INDUSTRIES LLC
CINCINNATI, OHIO

TITLE	DATE	SECTION
INSTALLATION DIMENSIONS	08-23-24A	C100
▲ 25500/26100-PHX-SL STABILIZER	SUPERSEDES 12-08-23	26127

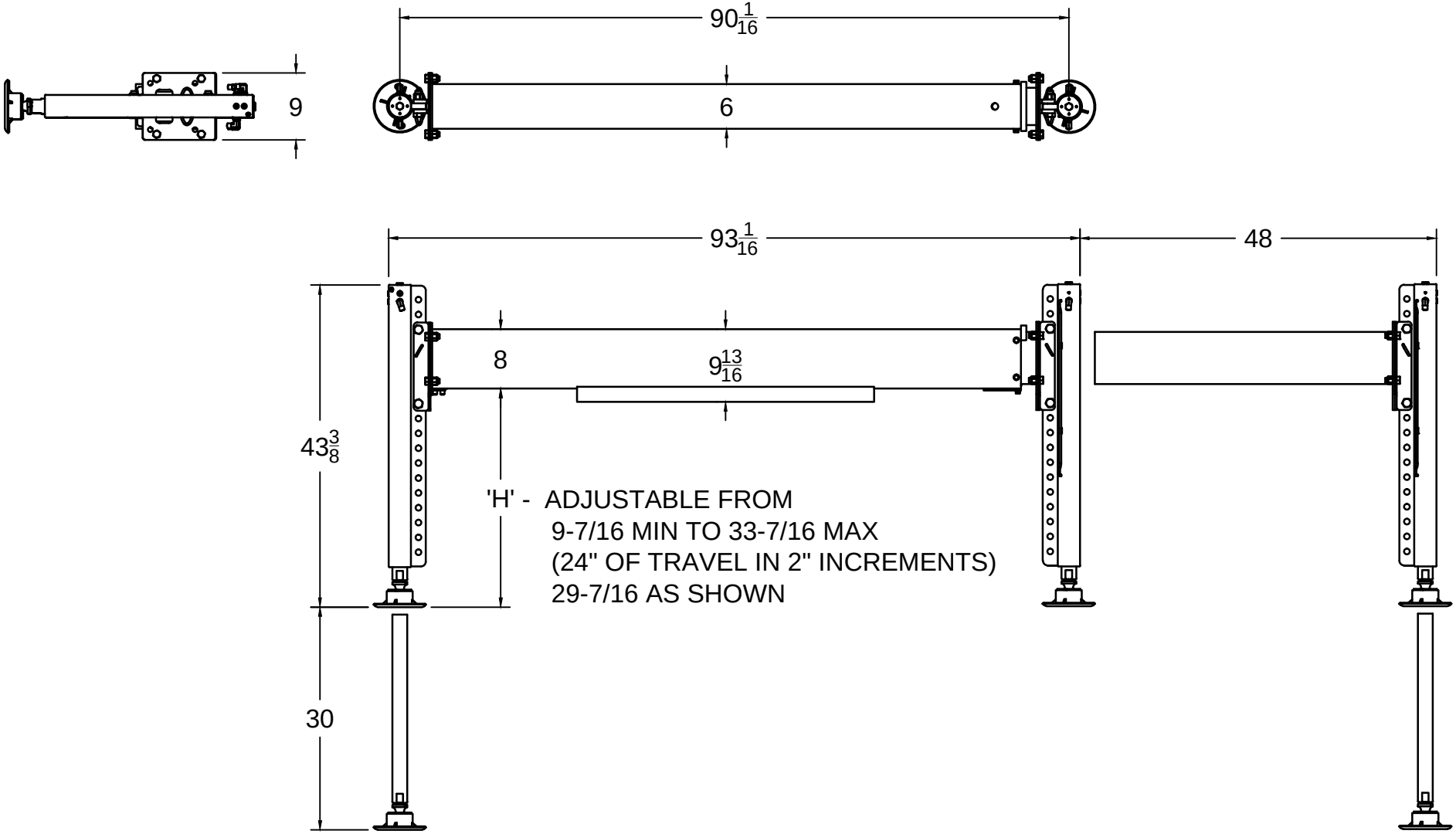

VENTURO® VENCO VENTURO INDUSTRIES LLC CINCINNATI, OHIO	TITLE INSTALLATION DIMENSIONS	DATE 08-23-24A	SECTION C100
	▲ 25500/26100-PHX-LL STABILIZER	SUPERSEDES 01-25-24	26132

SECTION 200

INSTALLATION

VENCO VENTURO INDUSTRIES LLC
CINCINNATI, OHIO

7607200A

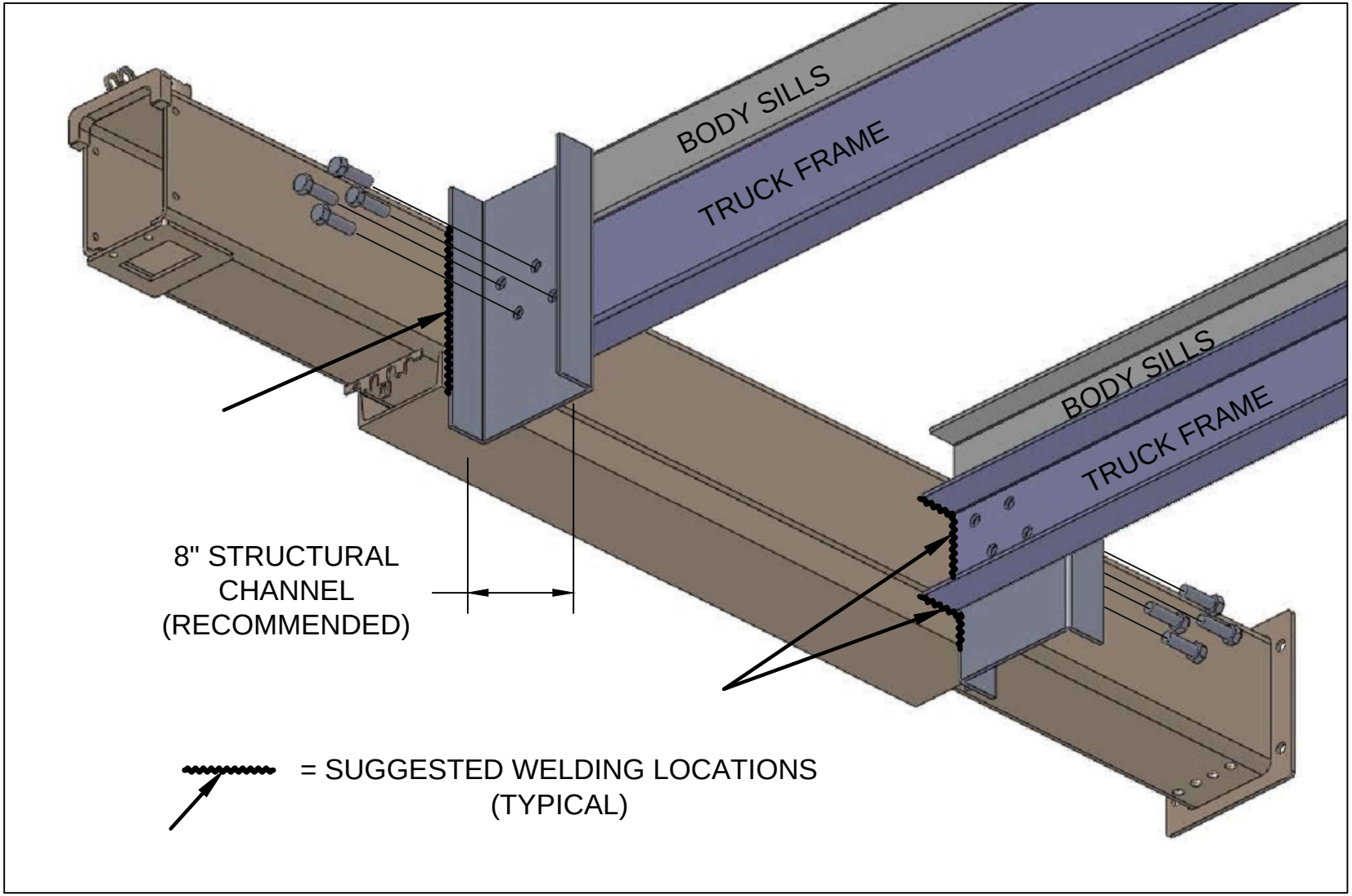

VENTURO® VENCO VENTURO INDUSTRIES LLC CINCINNATI, OHIO	RECOMMENDED MOUNTING TO TRUCK FRAME	DATE 12-08-23A	SECTION C200
	25100/26100 SERIES STABILIZERS	SUPERSEDES 01-20-17	25484-2

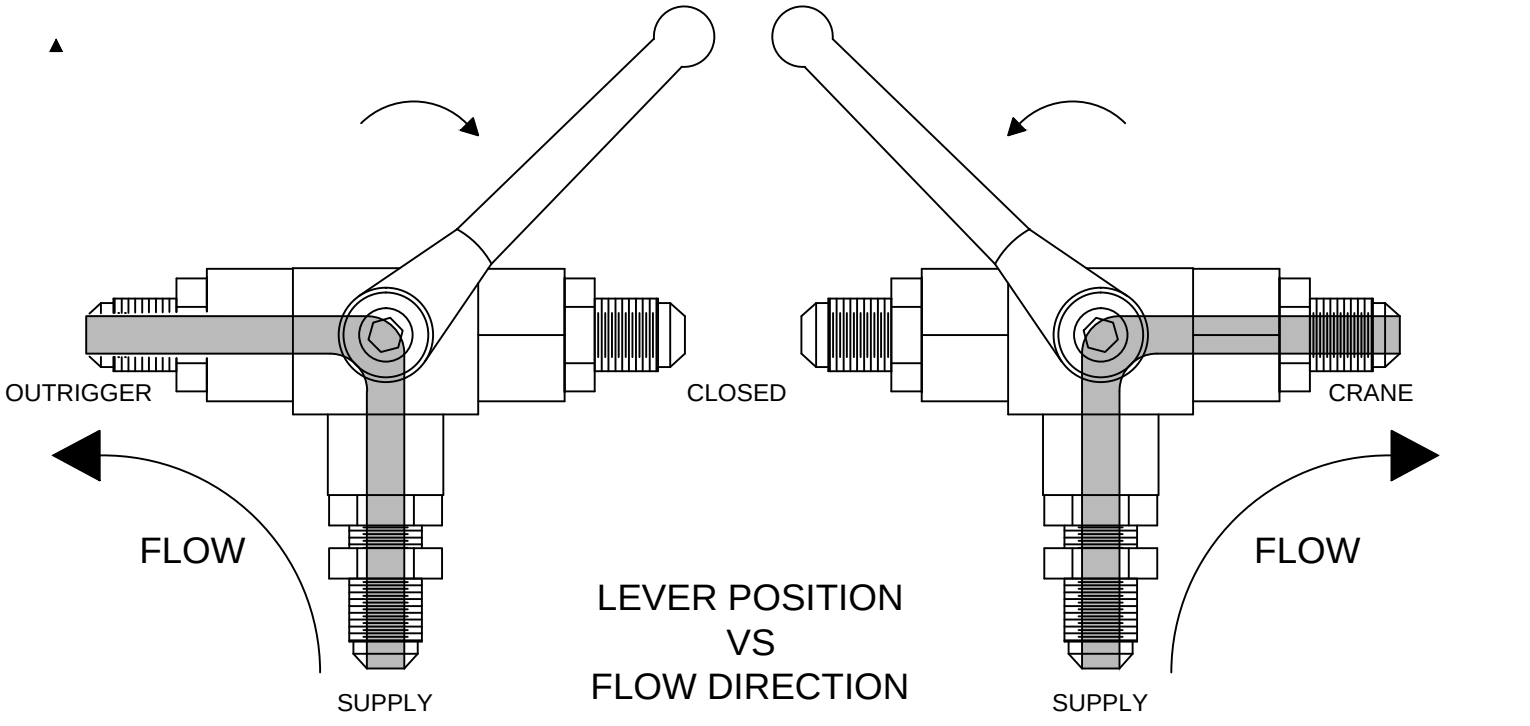

LEVER POSITION
VS
FLOW DIRECTION

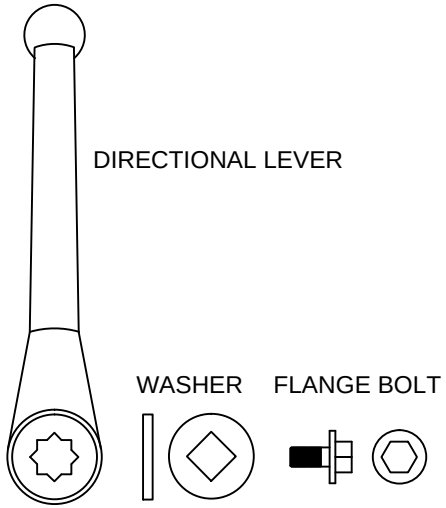

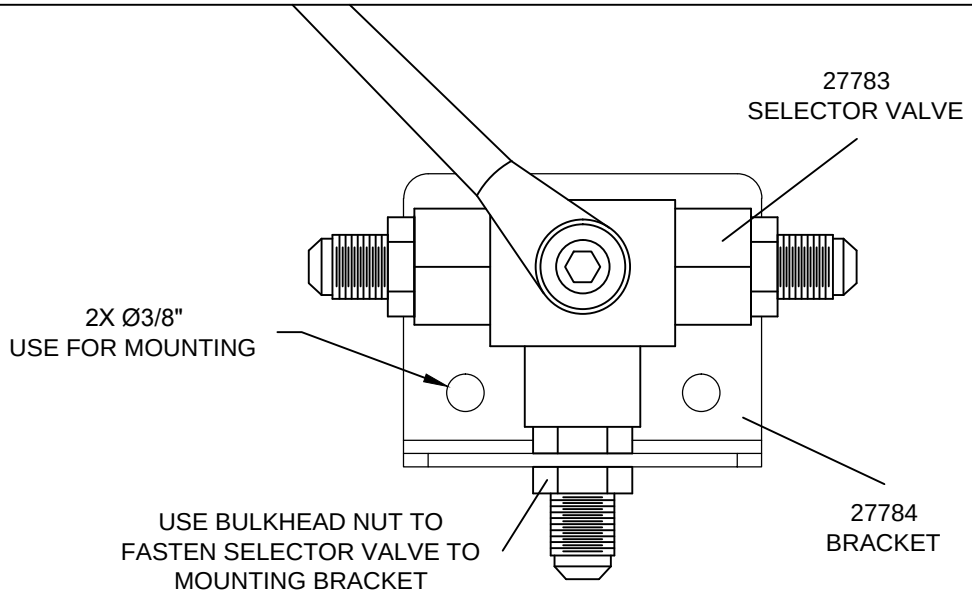

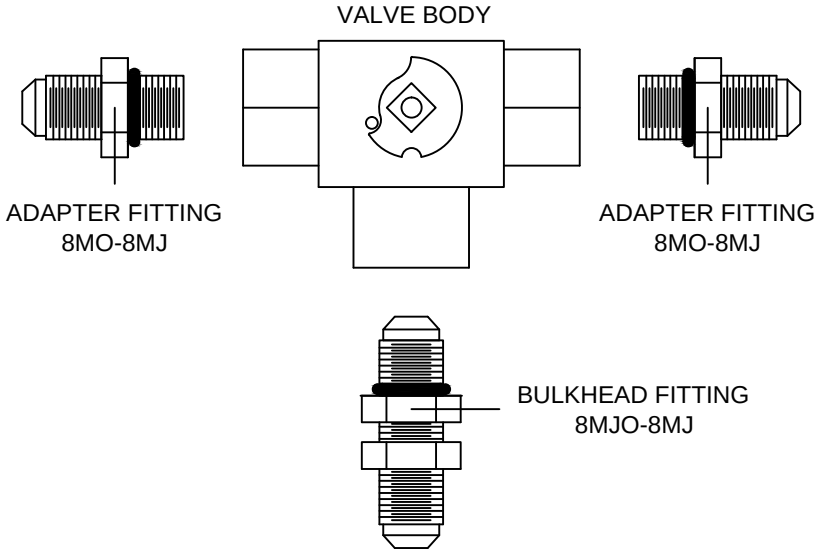

VENTURO® VENCO VENTURO INDUSTRIES LLC CINCINNATI, OHIO	SELECTOR VALVE OVERVIEW	DATE 12-07-23B	SECTION C200
	HYDRAULIC CRANES & STABILIZERS	SUPERSEDES 01-20-17A	25447-1

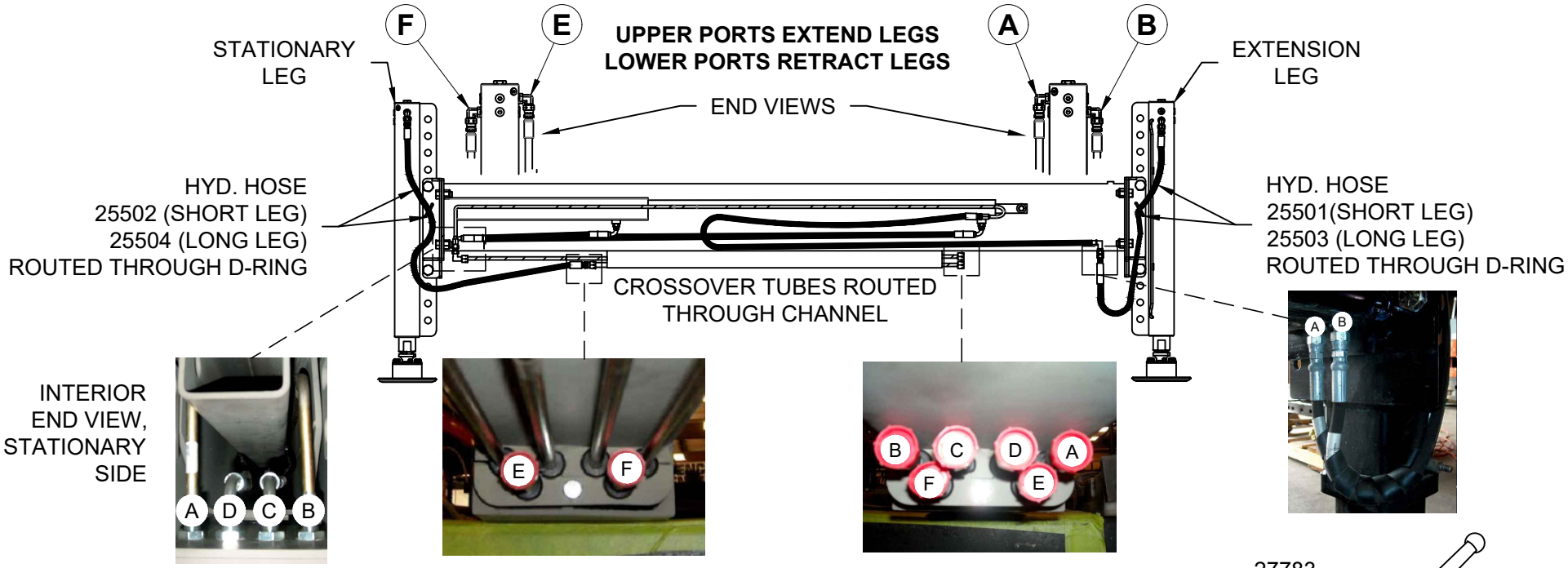

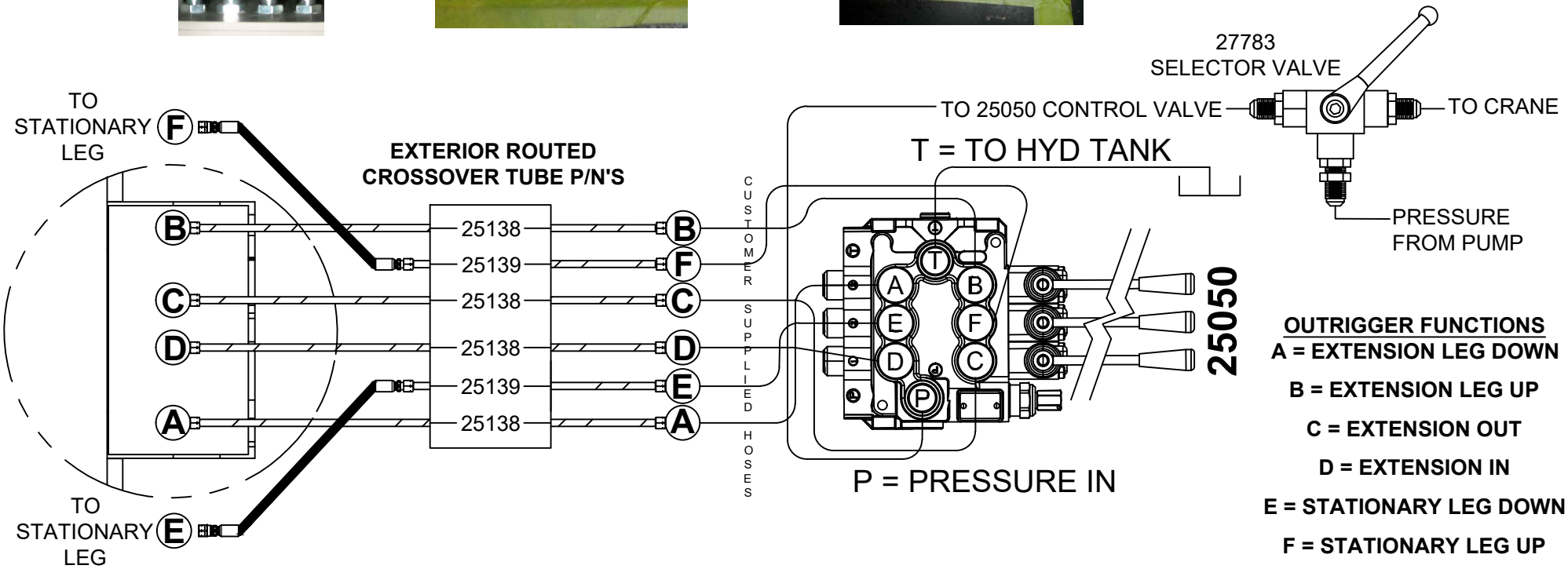

OUTRIGGER FUNCTIONS

A = EXTENSION LEG DOWN

B = EXTENSION LEG UP

C = EXTENSION OUT

D = EXTENSION IN

E = STATIONARY LEG DOWN

F = STATIONARY LEG UP

VENTURO®

VENCO VENTURO LLC
CINCINNATI, OHIO

TITLE	DATE	SECTION
HYDRAULIC MAPPING 1 OF 2	09-29-26	-
25500 PHX -** SERIES STABILIZERS	SUPERSEDES -	26134

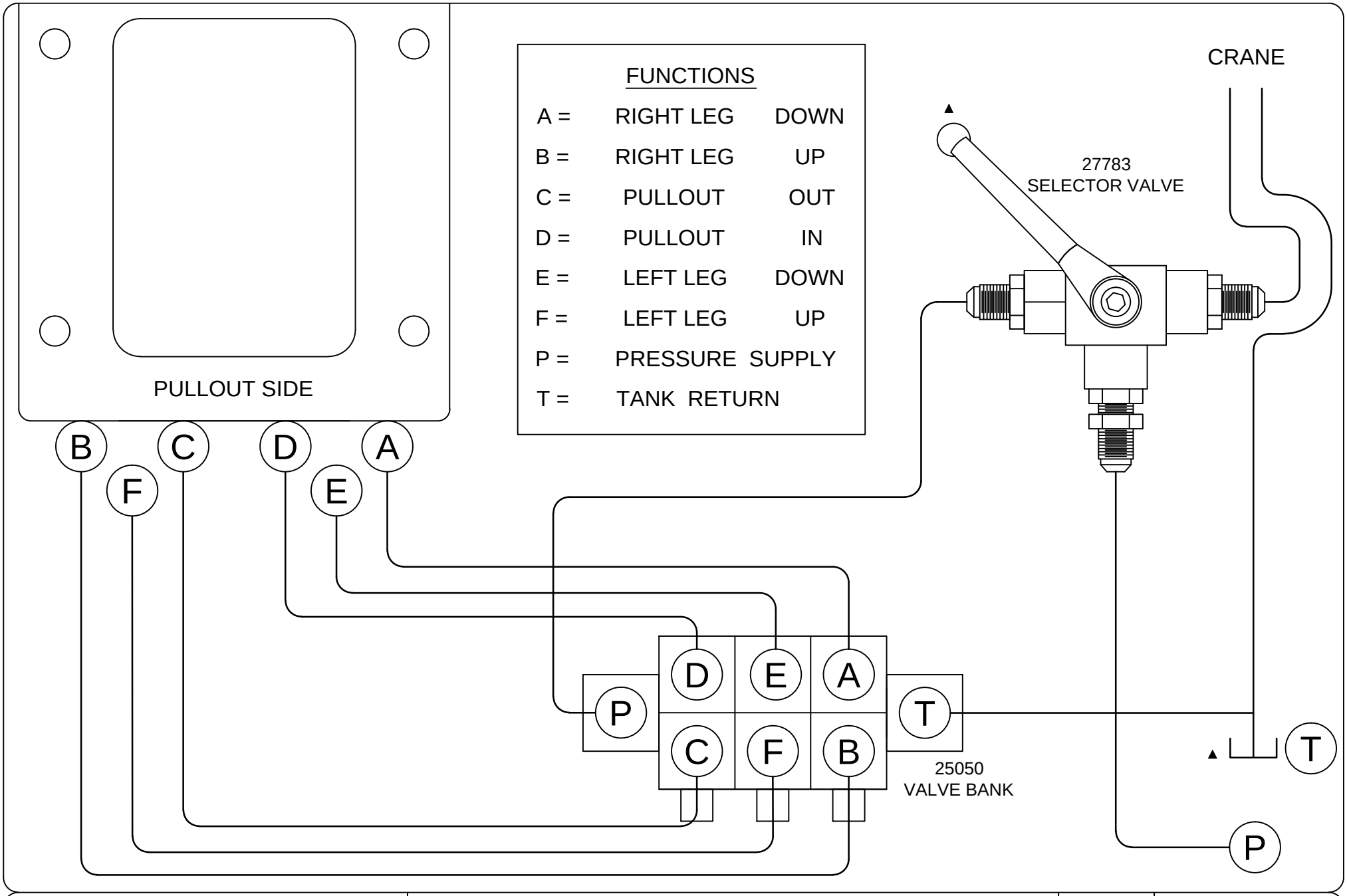

VENTURO® VENCO VENTURO INDUSTRIES LLC CINCINNATI, OHIO	HYDRAULIC MAPPING, 2 OF 2	DATE 12-08-23C	SECTION C200
	25100 / 26100-PHX STABILIZERS	SUPERSEDES 01-23-17B	25449

RECOMMENDED DEPARTURE ANGLE

VENTURO® VENCO VENTURO INDUSTRIES LLC CINCINNATI, OHIO	RECOMMENDED DEPARTURE ANGLE	DATE 08-25-22A	PAGE -
	REAR MOUNTED OUTRIGGERS	SUPERSEDES 01-18-17	25485

MOUNTING THE STABILIZER LEGS - 25500-PHX & 26100-PHX SERIES STABILIZERS

1. Determine the desired vertical mounting position for the stabilizer legs.
2. Use the provided Hardware to attach the Leg Mounting Bar to the Mounting Adapter Plate (between the two bars): ▲

   [4] HEX HEAD CAP SCREW - 3/4-10 x 3", GR. 5, ZINC

   [4] LOCK NUT, NYLON-INSERT FULL-HEIGHT - 3/4-10, GR. 5, ZINC
3. Torque Hex Head Cap Screws to 100 ft-lb.
4. Place 24964 DANGER Decal, [1] on each Leg as shown.

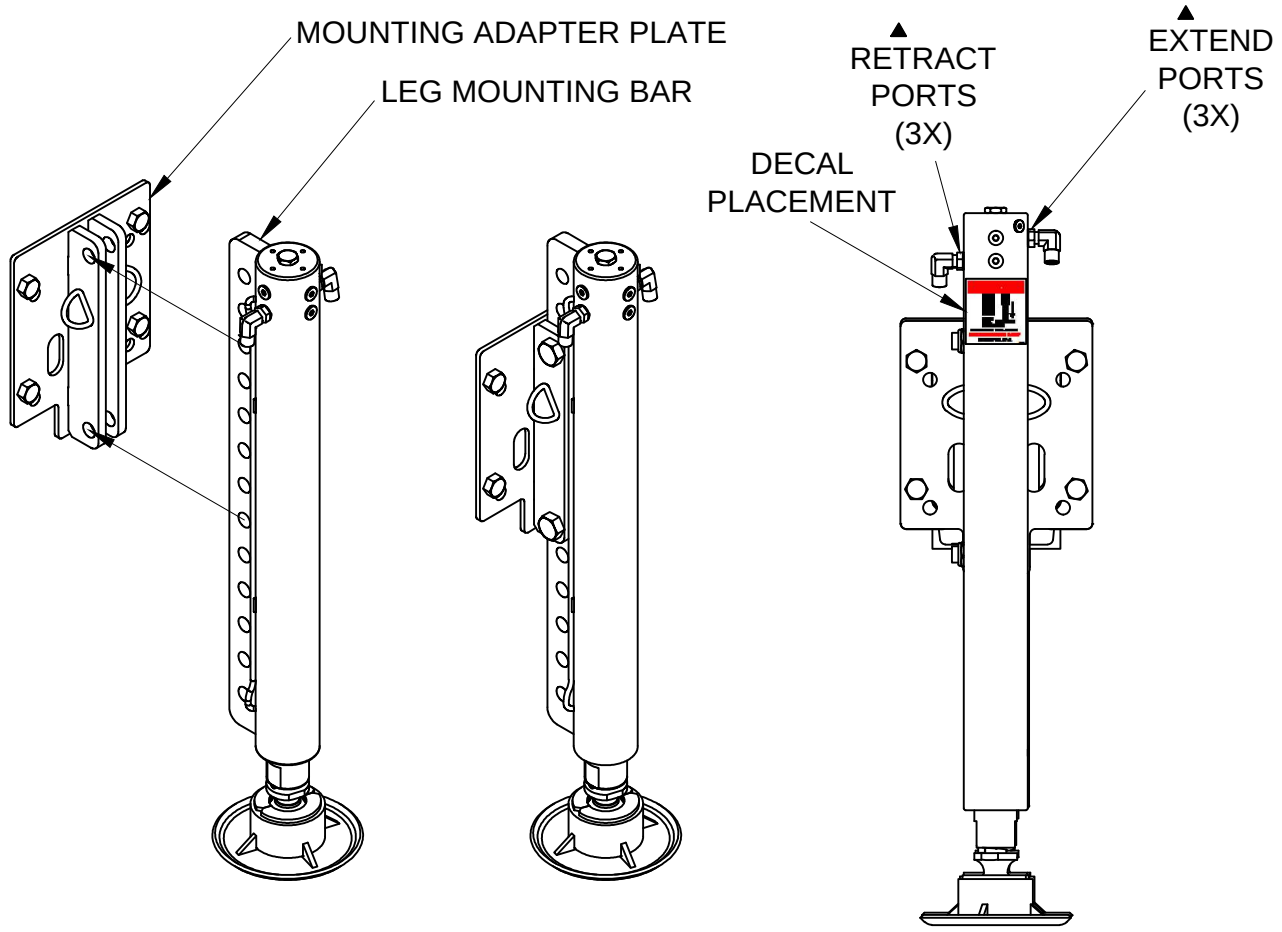

-SL ("SHORT LEG")
CYLINDER STROKE = 20"
VERTICAL POSITION ADJUSTABILITY = 14"
(7 MOUNTING POSITIONS IN 2" INCREMENTS)

-LL ("LONG LEG")
CYLINDER STROKE = 30"
VERTICAL POSITION ADJUSTABILITY = 24"
(12 MOUNTING POSITIONS IN 2" INCREMENTS)

ASSEMBLY OF 25100-PHX OUTRIGGER WITH LESS-CROSSTUBE CONFIGURATION

1

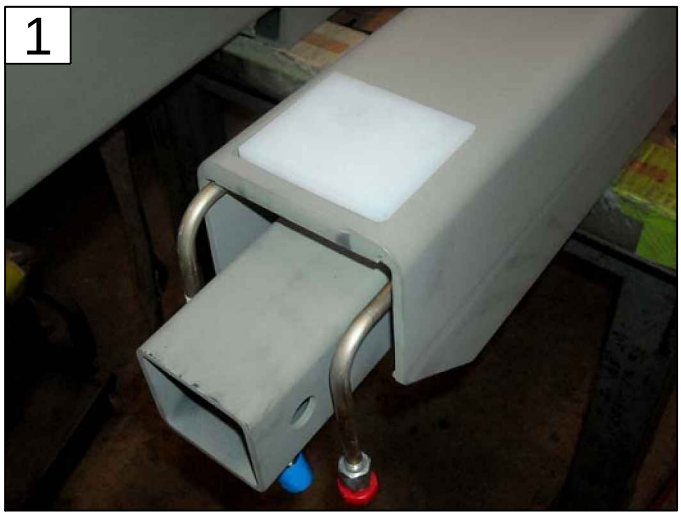

PLACE [1] UHMW PAD ON PULLOUT
PAGE 15 - ITEM 1

2

PLACE [1] UHMW PAD IN CROSSTUBE
PAGE 15 - ITEM 1

3

ENSURE PULLOUT CYLINDER HOUSING
& PLUMBING ARE TIED

4

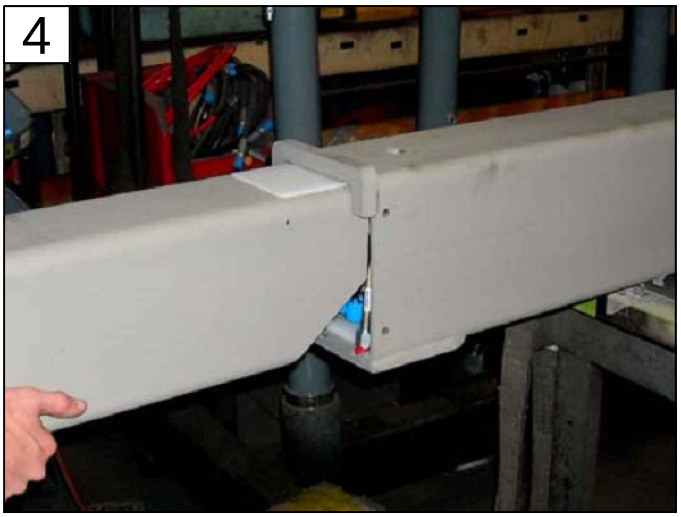

SLIDE PULLOUT INTO CROSSTUBE

5

FASTEN 25065 NUT BAR RETAINERS IN CROSSTUBE
PAGE 15 - ITEMS 2, 7, 8, & 9

6

FASTEN 25077 NUT BAR RETAINER IN CROSSTUBE
PAGE 15 - ITEMS 3, 4, 5, & 6

ASSEMBLY OF 25100-PHX OUTRIGGER WITH LESS-CROSSTUBE CONFIGURATION

7

FASTEN BULKHEADS - SEE NEXT STEP'S IMAGE
PAGE 15 - ITEM 12

8

FASTEN 25138 TUBES TO BULKHEADS
PAGE 15 - ITEM 13

9

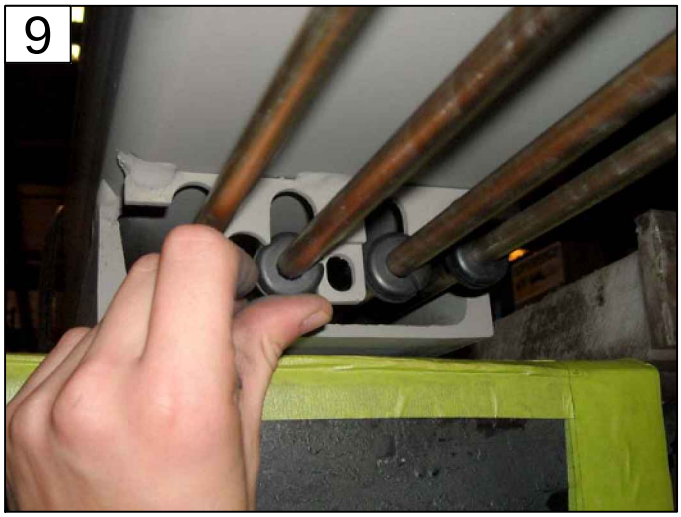

PUSH GROMMETS AROUND TUBES
PAGE 15 - ITEM 15

10

PLACE 25139 TUBES
PAGE 15 - ITEM 14

11

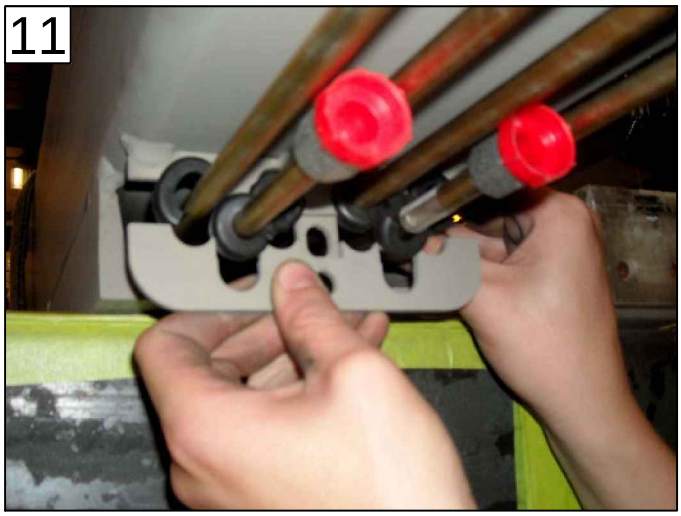

CLAMP AROUND GROMMETS
PAGE 15 - ITEM 16

12

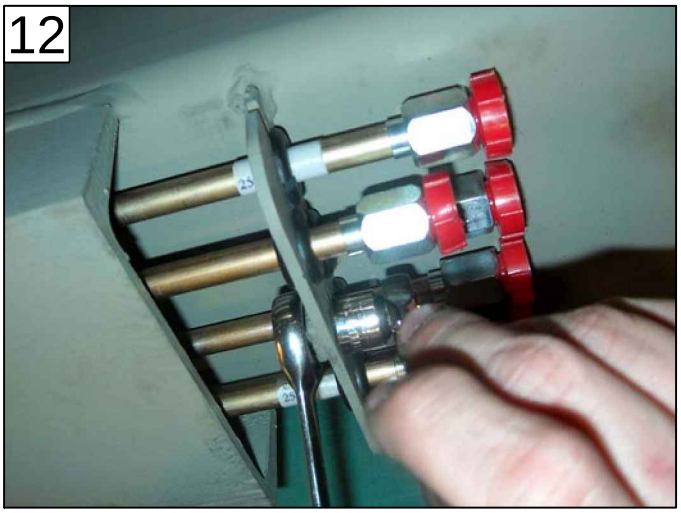

FASTEN CLAMP, PAGE 15 - ITEMS 4 & 17
REPEAT STEPS 9 TO 11 FOR OPPOSITE CLAMP

ASSEMBLY OF 25100-PHX OUTRIGGER WITH LESS-CROSSTUBE CONFIGURATION

13

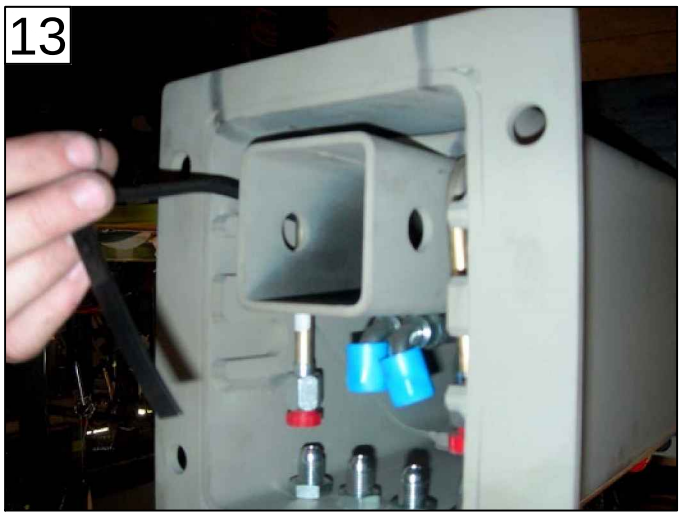

UNTIE PULLOUT CYLINDER HOUSING & PLUMBING

14

SEE HYDRAULIC MAPPING
PAGES 8 & 9

15

INSERT SHAFT & COLLARS INTO CYLINDER HOUSING

16

PUSH SHAFT INTO TOP SLOT OF CROSSTUBE

17

WITH CYLINDER HOUSING CENTERED
LOCTITE & FASTEN COLLARS FLUSH

18

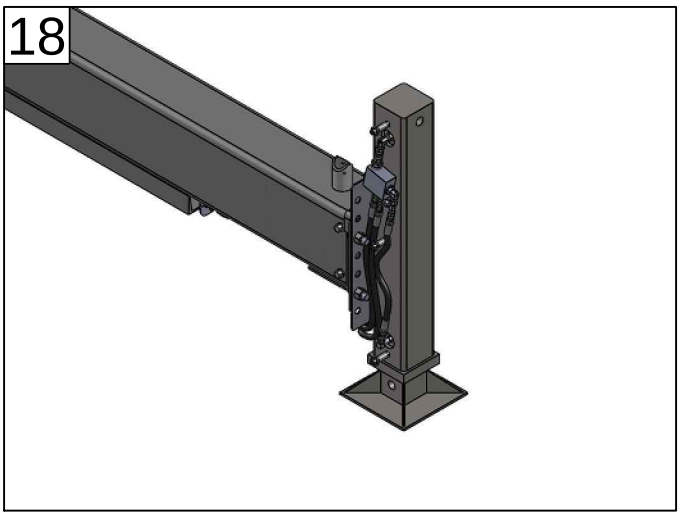

PROCEED TO MOUNTING OF LEGS
& HYDRAULICS

SECTION 400

REPLACEMENT PARTS

VENCO VENTURO INDUSTRIES LLC
CINCINNATI, OHIO

7607400A

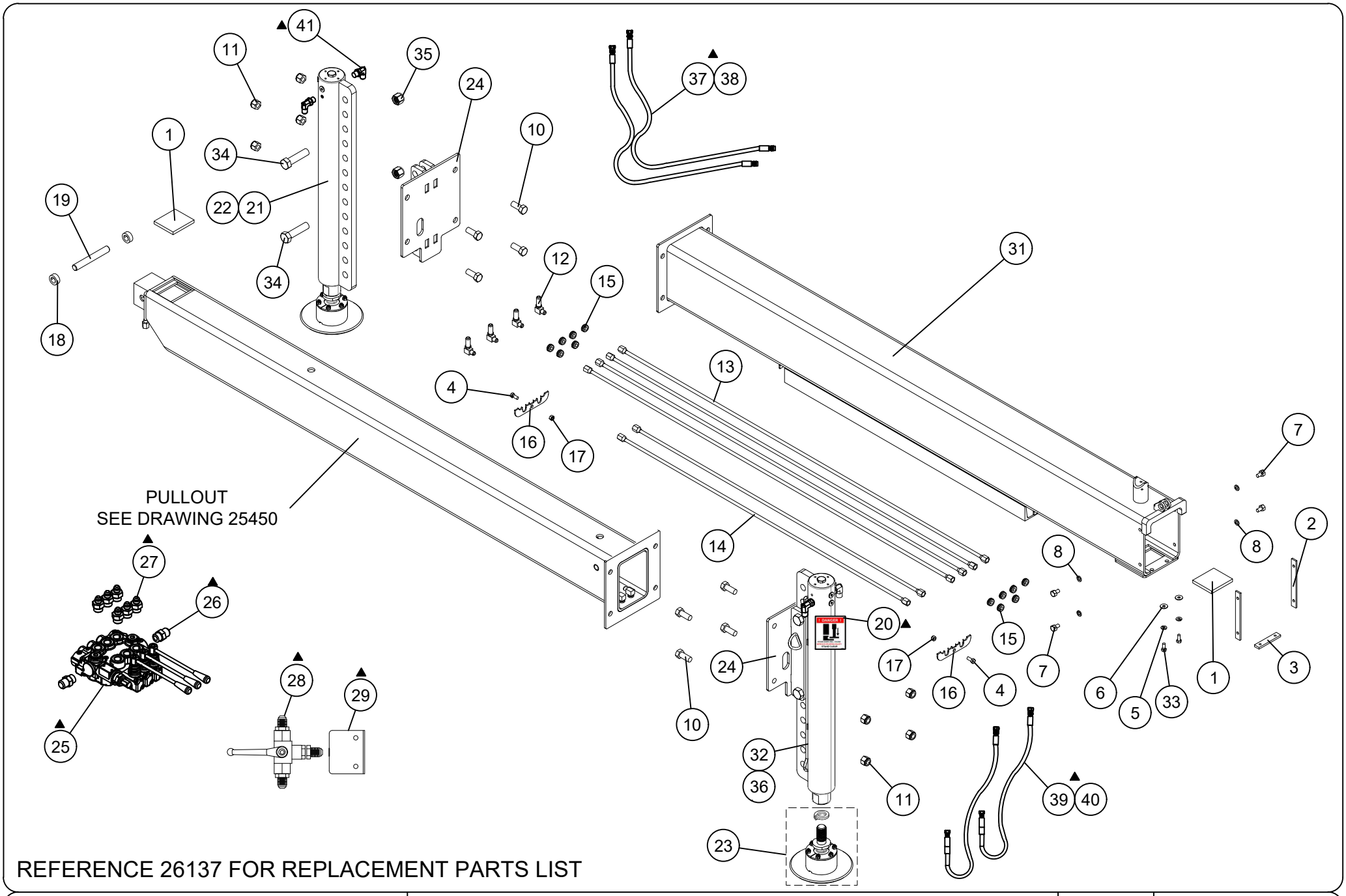

REFERENCE 26137 FOR REPLACEMENT PARTS LIST

VENTURO® VENCO VENTURO LLC CINCINNATI, OHIO	REPLACEMENT PARTS DRAWING (-LC PARTS INCLUDED)	DATE 10-02-26C	PAGE -
	25500-PHX OUTRIGGERS	SUPERSEDES 07-02-25B	26136

PARTS BREAKDOWN, 25500-PHX OUTRIGGERS (LESS-CROSSTUBE PARTS INCLUDED)

			QTY	
#	PART #	DESCRIPTION	-SL	-LL
*1	25081	UHMW PAD; 3-1/8 X 3-1/2 X 3/8	2	2
*2	25065	NUT BAR RETAINER	2	2
*3	25077	NUT BAR RETAINER	1	1
*4	!HHCS03118075	HEX HEAD CAP SCREW; 5/16-18 X 3/4, GR. 5	2	2
*5	!LWSH-031	LOCK WASHER; 5/16, GR. 5	2	2
*6	!FWSH-031	FLAT WASHER; 5/16, GR. 5	2	2
*7	!HHCS03816050	HEX HEAD CAP SCREW; 3/8-16 X 1/2, GR. 5	4	4
*8	!LWSH-038	LOCK WASHER; 3/8, GR. 5	4	4
*9	-	-	-	-
*10	!HHCS06311150-8	HEX HEAD CAP SCREW; 5/8-11 X 1-1/2, GR. 8	8	8
*11	!LNUT-06311-8	LOCK NUT; 5/8-11, GR. 8, NYLON INSERT	8	8
*12	H2701-0606	ADAPTER FITTING; 90° BULKHEAD, 6MJ-6MJ	4	4
*13	25138	HYDRAULIC TUBE, 60"	4	4
*14	25139	HYDRAULIC TUBE, 47"	2	2
*15	14883	GROMMETS, HYDRAULIC TUBES	12	12
*16	25157	CROSSTUBE CLAMP PLATE	2	2
*17	!LNUT-03118	LOCK NUT; 5/16-18, GR.5, NYLON INSERT	2	2
*18	28446	CLAMPING SHAFT COLLAR - 3/4 ID	2	2
*19	25051	SHAFT, CYLINDER HOUSING	1	1
*20	24964	DECAL; DANGER, CRUSHING INJURY	2	2
21	26109-SL	HYDRAULIC LEG W/ SWIVEL FOOT; SHORT	2	-
22	26109-LL	HYDRAULIC LEG W/ SWIVEL FOOT; LONG	-	2
23	26115	SWIVEL FOOT (ONLY)	-	-
24	25230	ADAPTER MOUNTING PLATE	2	2
*25	25050	VALVE BLOCK, 3-SPOOL	1	1
-	25218	HANDLE (ONLY), VALVE BLOCK	-	-
-	25219	LEVER BOX (ONLY), VALVE BLOCK	-	-
*26	H6400-0808	ADAPTER FITTING; STRAIGHT, 8MJ-8MO	2	2
*27	H6400-0608	ADAPTER FITTING; STRAIGHT, 6MJ-8MO	6	6
*28	27783	SELECTOR VALVE	1	1
*29	27784	BRACKET, SELECTOR VALVE	1	1
30	INST-21024	OUTRIGGER & ACCESSORIES MANUAL	1	1
31	25085-2	CROSSTUBE; 25100 SERIES OUTRIGGERS	1	1
32	25232	HYD LEG; SHORT, 20" STROKE (CYLINDER ONLY)	-	-
*33	!HHCS03118063	HEX HEAD CAP SCREW; 5/16-18 X 5/8, GR. 5	2	2
34	!HHCS07510300	HEX HEAD CAP SCREW; 3/4-10 X 3, GR. 5	4	4
35	!LNUT-07510	LOCK NUT (FULL); 3/4-10, GR. 5, NYLON INSERT	4	4
36	25233	HYD LEG; LONG, 30" STROKE (CYLINDER ONLY)	-	-
▲ 37	25502	HYDRAULIC HOSE; SHORT LEG, STATIONARY SIDE	2	-
▲ 38	25504	HYDRAULIC HOSE; LONG LEG, STATIONARY SIDE	-	2
▲ 39	25501	HYDRAULIC HOSE; SHORT LEG, EXTENSION SIDE	2	-
▲ 40	25503	HYDRAULIC HOSE; LONG LEG, EXTENSION SIDE	-	2
▲ 41	H6801-0606	ADAPTER FITTING; °90 ELBOW, -06MJ-06MO, STEEL	4	4

* WHEN PURCHASED IN "LESS CROSS TUBE" ("LCT") CONFIGURATION, THESE ITEMS WILL BE SHIPPED LOOSE AND REQUIRE INSTALLATION

REFERENCE 26136 FOR REPLACEMENT PARTS DRAWING

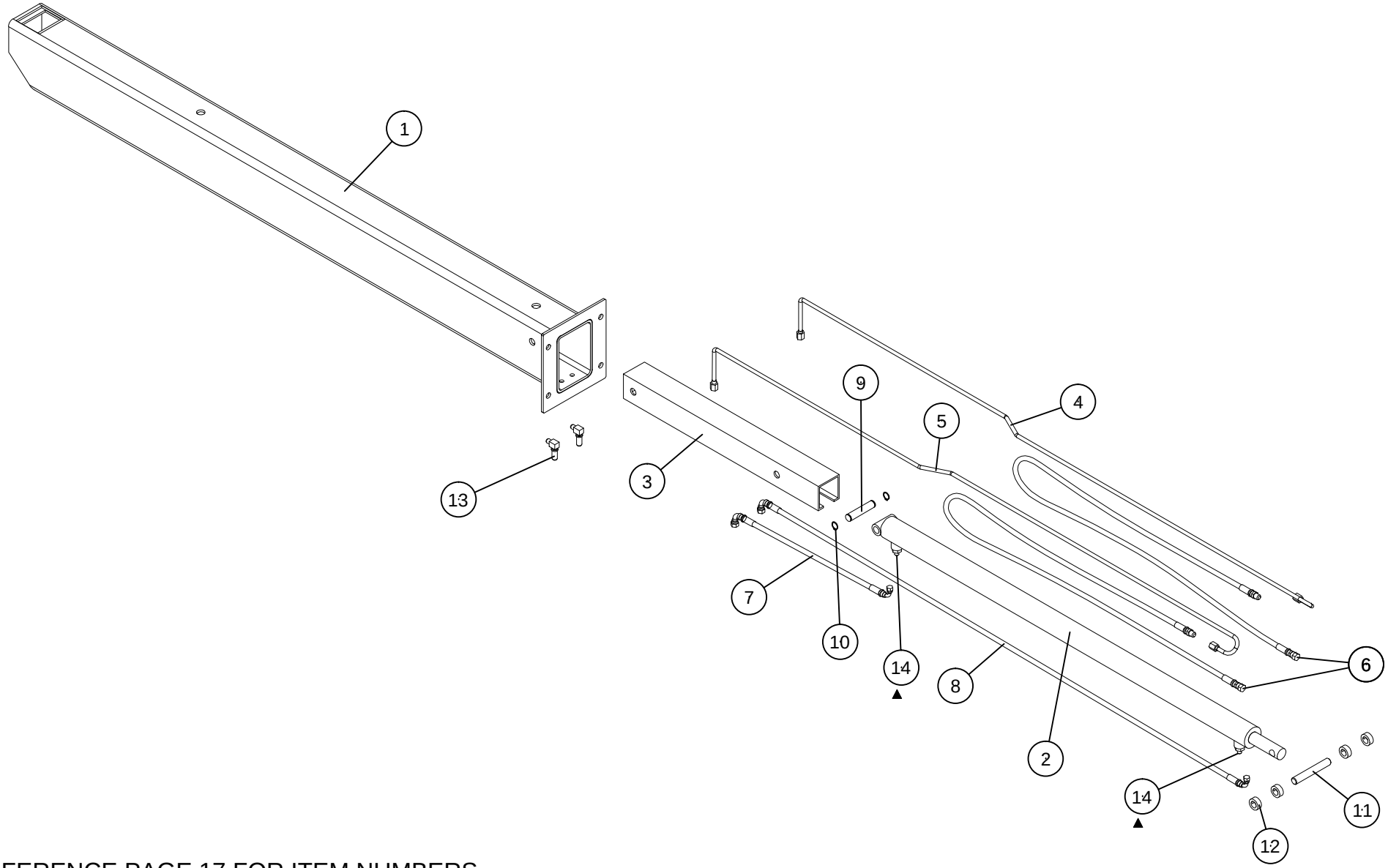

REFERENCE PAGE 17 FOR ITEM NUMBERS

VENTURO® VENCO VENTURO INDUSTRIES LLC CINCINNATI, OHIO	PARTS BREAKDOWN	DATE 07-30-24B	PAGE 18
	25100-PHX PULLOUT ASSEMBLY	SUPERSEDES 01-23-17A	25450

#	PART #	DESCRIPTION	QTY
1	25087-2	PULLOUT; 4', 25100-PHX OUTRIGGERS	1
2	25086	EXTENSION CYLINDER; 4', 25100-PHX	1
3	25088	HOUSING; EXTENSION CYLINDER BASE-END	1
4	25137	HYDRAULIC TUBE; RIGHT LEG, DOWN	1
5	25136	HYDRAULIC TUBE; RIGHT LEG, UP	1
6	25149	HOSE ASSEMBLY; RIGHT LEG, UP & DOWN	2
7	25154	HOSE ASSEMBLY; CYLINDER, OUT	1
8	25155	HOSE ASSEMBLY; CYLINDER, IN	1
9	25049	SHAFT; CYLINDER & HOUSING, BASE-END	1
10	!SRNG-075	SNAP RING; 3/4", PLATED	2
11	25052	SHAFT; CYLINDER & PULLOUT, ROD-END	1
12	28446	CLAMPING SHAFT COLLAR - 3/4" ID	4
13	H2701LN-0606	BULKHEAD FITTINGS; 90°, 6MJ-6MJ, L-NUT	2
14	H6400-0408	HYD TUBE ADAPTER - 4MJ-8MO	2 ▲

22555

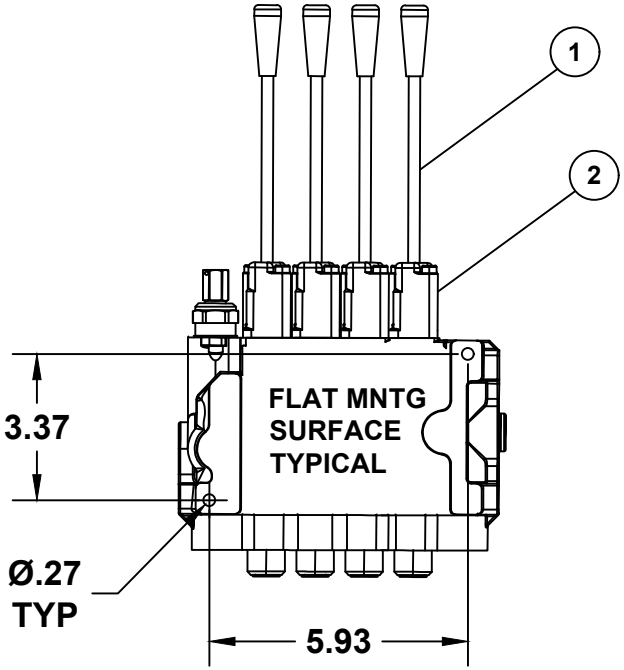

25050

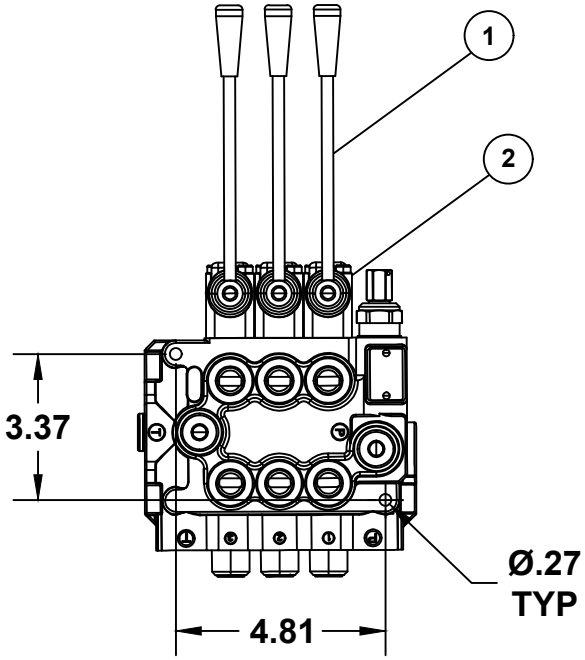

22444

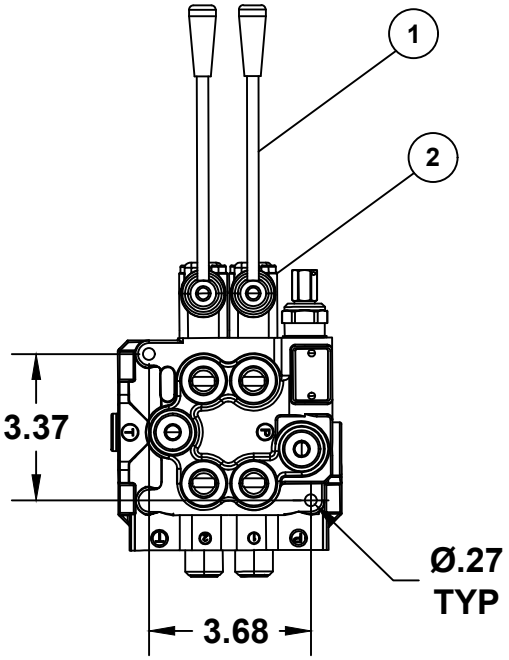

NOTE:
P/N 25219 INCLUDES
MNTG HARDWARE

ITEMS 3 & 4 NOT SHOWN

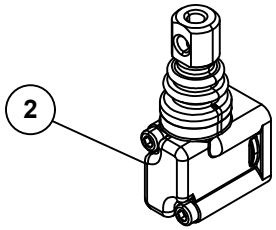

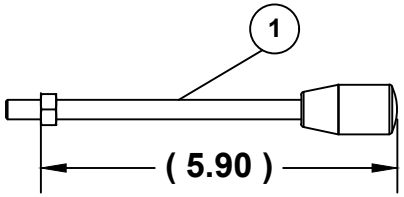

	SPOOL VALVE ASSEMBLIES				
ITEM NO.	22444	25050	22555	PART NO.	DESCRIPTION
	QTY.				
1	2	3	4	25218	HANDLE, BUCHER SPOOL VALVES
2	2	3	4	25219	LEVER BOX, BUCHER SPOOL VALVES
3	2	3	4	25209	BUCHER SEAL KIT, SINGLE SECTION
4	2	3	4	25213	CENTER SPRING KIT, SINGLE SECTION

VENTURO®

MANUFACTURING, INC.
CINCINNATI, OHIO

TITLE	DATE	PAGE
REPLACEMENT PARTS - SPOOL VALVES	09-24-25	-
POWERED STABILIZERS (PH, PHX, PHXD)	SUPERSEDES -	25216

VENTURO CRANES LIMITED WARRANTY POLICY

Venturo products are built to last…we guarantee them.
As a purchaser of any new Venturo product covered by warranty, you will receive 1 year of the most complete coverage available…and, at no added cost to you.

1-Year Limited Warranty Policy

This limited policy warrants new products of Venturo to be free from defects in material and workmanship for a period of one (1) year from date of original installation. OEM products or accessories purchased by Venturo as part of or offered with our product will carry the OEM manufacturer's respective warranty. Our warranty covers:

- ***Repair or replacement of product***
- ***Labor to repair or replace product***
- ***Freight to return and/or replace product***

We shall not be liable for any contingent liabilities arising out of the improper function of any products. Warranty shall become void if the product is improperly installed, modified, damaged, abused or used for application other than intended use. There is no warranty of merchantability, fitness for a particular purpose, warranty arising from course of dealing or usage of trade, or any other implied or expressed warranty, except as made specifically herein. This warranty supersedes all previous warranties, written or implied.

Warranty Claims

Venco Venturo Industries LLC will make a good faith effort for prompt correction or other adjustment with respect to any product, which proves to be defective after our inspection and within the warranty period. Before any repairs are attempted or before returning any product, your Venturo Distributor is required to obtain a warranty claim number. This number is necessary for any claim to be considered. To obtain a warranty claim number, Venturo requires the model and serial number. Only authorized Venturo Distributors can perform warranty. For the name and address of your local Venturo Distributor call the **Warranty Claim Department - 513-772-8448.**

WARNING - It is the responsibility of the installer to ensure the installation is completed according to the manufacturer's recommendations, ensure the ultimate user understands how to operate product in a safe manner, and understands the need for regular service and maintenance by an authorized Venturo Distributor. No modifications or alterations may be made to any Venturo product without the expressed written consent of Venco Venturo Industries LLC. Installation of any Venturo product must be done by an authorized Venturo Distributor, to the standards of the industry; including maintenance, service and affixing of all instruction, safety and warning decals. Users should be instructed as to the safe operation at time of delivery. Maintenance, service, operation and safety warning decals are available on request from Venco Venturo Industries LLC.

VENCO VENTURO INDUSTRIES LLC
12110 BEST PLACE | CINCINNATI, OHIO 45241
P: 800-226-2238 | F: 513-326-5427
www.venturo.com