E3

INST-26927

OWNER'S MANUAL

*HSBA*G-P****

-

PARTS & INSTALLATION MANUAL

HT50KXP SERIES

Included in this manual:

HT50KX

- 8,000 lb Hydraulic Telescopic Service Crane
- Proportional Control
- 20, 25, or 30 ft Fully-Powered, Two-Stage Boom Extension

VENCO VENTURO INDUSTRIES LLC
12110 BEST PLACE | CINCINNATI, OHIO 45241
800-226-2238

This manual also available online at www.venturo.com.

HT50KX PROPORTIONAL SERIES

INST-26927 - 10/21/2026 (Rev: E3)

7607100A	SECTION 100: DESCRIPTION & SPECIFICATIONS
24448	SPECIFICATIONS & OPERATING FEATURES
26894	INSTALLATION DIMENSIONS (20')
26893	INSTALLATION DIMENSIONS (25')
24161	INSTALLATION DIMENSIONS (30')
26892	MOUNTING DIMENSIONS; BASE PLATE
22351	CAPACITY CHART; HT50KX (20' BOOM)
23122	CAPACITY CHART; HT50KX (25' BOOM)
24093	CAPACITY CHART; HT50KX (30' BOOM)
7607150A	SECTION 150: SAFETY
15394	VEHICLE & CRANE ELECTRICAL HAZARD INFORMATION
920612	SAFETY & HAZARDS, GENERAL
19217	WINCH SAFETY WARNINGS
22181A	SAFETY DECALS DRAWING & LIST
22181B	SAFETY DECALS DRAWING & LIST
22181C	SAFETY DECALS DRAWING & LIST
28521	SAFETY DECALS DRAWING & LIST
24095	DECALS; BOOM CAPACITY (20', 25', & 30')
7607200A	SECTION 200: INSTALLATION
26895	CRANE INSTALLATION, PG. 1
22173	CRANE INSTALLATION, PG. 2
23532	ROTATION STOP LOCATION
20906-50	STABILITY PROCEDURE (20')
20906-50B	STABILITY PROCEDURE (25')
20906-50C	STABILITY PROCEDURE (30')
20907	STABILITY CHART
22825	22785 HYDRAULIC TANK DIMENSIONS
23015	CONNECTIONS GUIDE (PAGE 1 OF 2)
23014	CONNECTIONS GUIDE (PAGE 2 OF 2)
22883	PTO INSTALLATION
22913	COMPARTMENT DRAWING
22245	WIRE ROPE INSTALLATION
7607300B	SECTION 300: OPERATION & MAINTENANCE
23203	MAINTENANCE OVERVIEW INFORMATION
23753	CRANE OPERATION & MAINTENANCE INSTRUCTIONS (PAGE 1 OF 3)
26935	CRANE OPERATION & MAINTENANCE INSTRUCTIONS (PAGE 2 OF 3)
23755	CRANE OPERATION & MAINTENANCE INSTRUCTIONS (PAGE 3 OF 3)
26934	HYDRAULIC VALVE SYSTEMS EXPLANATION
23231	WIRE ROPE, HOOK, & LOAD BLOCK INFO
7607400A	SECTION 400: REPLACEMENT PARTS
26890	REPLACEMENT PARTS DRAWING; MECHANISM
26881	REPLACEMENT PARTS LIST; MECHANISM
26905	REPLACEMENT FASTENER DRAWING; MECHANISM
26906	REPLACEMENT FASTENER LIST; MECHANISM
26947	REPLACEMENT PARTS DRAWING; 26595 20' BOOM
26948	REPLACEMENT PARTS LIST; 26595 20' BOOM
26949	REPLACEMENT FASTENER DRAWING; 26595 20' BOOM
26950	REPLACEMENT FASTENER LIST; 26595 20' BOOM
26951	REPLACEMENT PARTS DRAWING; 26593 25' BOOM
26952	REPLACEMENT PARTS LIST; 26593 25' BOOM
26953	REPLACEMENT FASTENER DRAWING; 26593 25' BOOM
26954	REPLACEMENT FASTENER LIST; 26593 25' BOOM
26955	REPLACEMENT PARTS DRAWING; 26590 30' BOOM
26956	REPLACEMENT PARTS LIST; 26590 30' BOOM
26957	REPLACEMENT FASTENER DRAWING; 26590 30' BOOM
26958	REPLACEMENT FASTENER LIST; 26590 30' BOOM
26942	REPL PARTS DWG & LIST - 27469-L-C-11 ANTI-TWO-BLOCK
28239	COMPACT A2B CUT-OUT CAM INSTALLATION / ADJUSTMENT
28855	WORK LIGHT INSTALLATION W/ 3-WIRE CORD REEL (NON-VLC)
26896	TI1 & TI2 WINCH REPLACEMENT PARTS DRAWING & LIST
22978	PROP HYDRAULIC SYSTEM COMPONENTS REPLACEMENT PARTS DRAWING
26930	PROP HYDRAULIC SYSTEM COMPONENTS REPLACEMENT PARTS LIST
22940	22736H HYDRAULIC VALVE MANIFOLD REPLACEMENT PARTS DRAWING & LIST
27352	HYDRAULIC SYSTEM SCHEMATIC - PROPORTIONAL CONTROL 40/50KX
26898	ELECTRICAL SCHEMATIC (PROP); W/ HORN
22125	ELECTRICAL SCHEMATIC; 16 PIN SOCKET WIRING
23073	REPL PARTS DWG / LIST; 21988 PENDANT (PROP, CORDED)
23072	REPL PARTS DWG / LIST; 21987 PENDANT (PROP W/ ENG CTRL, CORDED)
23531	REPL PARTS DWG / LIST; 21983 (PROP W/ ENG CTRL, RADIO)
35330	REPL PARTS DWG / LIST; 24472 (PROP W/ ENG CTRL) RADIO, KARTECH
22615	ENGINE START & STOP / THROTTLE CONTROLS
23224	RESERVOIR KITS; REPLACEMENT PARTS DRAWING & LISTS
28522	DECAL PLACEMENT
22926	22924 FIELD SERVICE LABEL KITS
25431	NOTES
12-00073_VNT1	WARRANTY PAGE

SECTION 100

DESCRIPTION

&

SPECIFICATIONS

VENCO VENTURO INDUSTRIES LLC
CINCINNATI, OHIO

SPECIFICATIONS

PTO-driven hydraulic system

12-volt electrical controls (e.g. valve coils)

50,000 ft-lb overturning moment (or as limited by truck stability)

Moment overload shut-off system

Hydraulic winch - 4,000 lb single-line capacity with automatic load brake

Hydraulic boom elevation

Hydraulic boom extension

Hydraulic 400° rotation

Corded remote control pendant

Radio remote control pendant (optional)

In-compartment electrical control panel (optional)

Accessories (optional):

Stabilizers: 25100-CD, 25500-PHX(D), 26100-PHX(D)

Pedestal: 17830

Boom Rest: 20381-1, VT1199

TELESCOPIC BOOM	10.4 - 20.8 ft	11.9 - 25.2 ft	13.5 - 30.2 ft
BOOM ELEVATION	-5° TO 75°	-5° TO 75°	-5° TO 75°
BOOM HYD EXTENSION	10 ft	13 ft	16.3 ft
BOOM MANUAL EXT	-	-	-
CAPACITY	2500 lb @ 20.5 ft	2000 lb @ 25.0 ft	1450 lb @ 30.0 ft
	8000 lb @ 5.5 ft	8000 lb @ 6.0 ft	8000 lb @ 6.0 ft
WIRE ROPE	3/8" x 100 ft	3/8" x 100 ft	3/8" x 125 ft

⚠ WARNING

- These products are not passenger lifts. They are not designed or intended to be used to lift, support, or otherwise transport personnel.

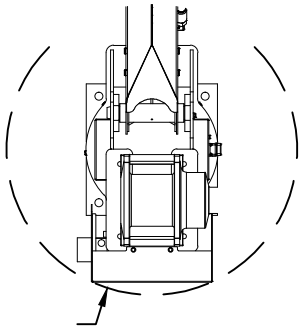

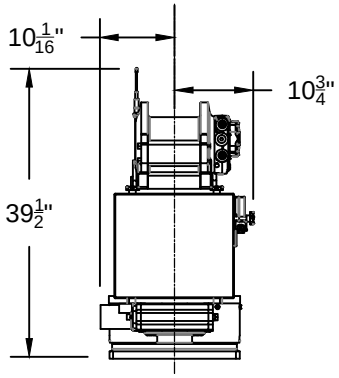

CENTER OF ROTATION

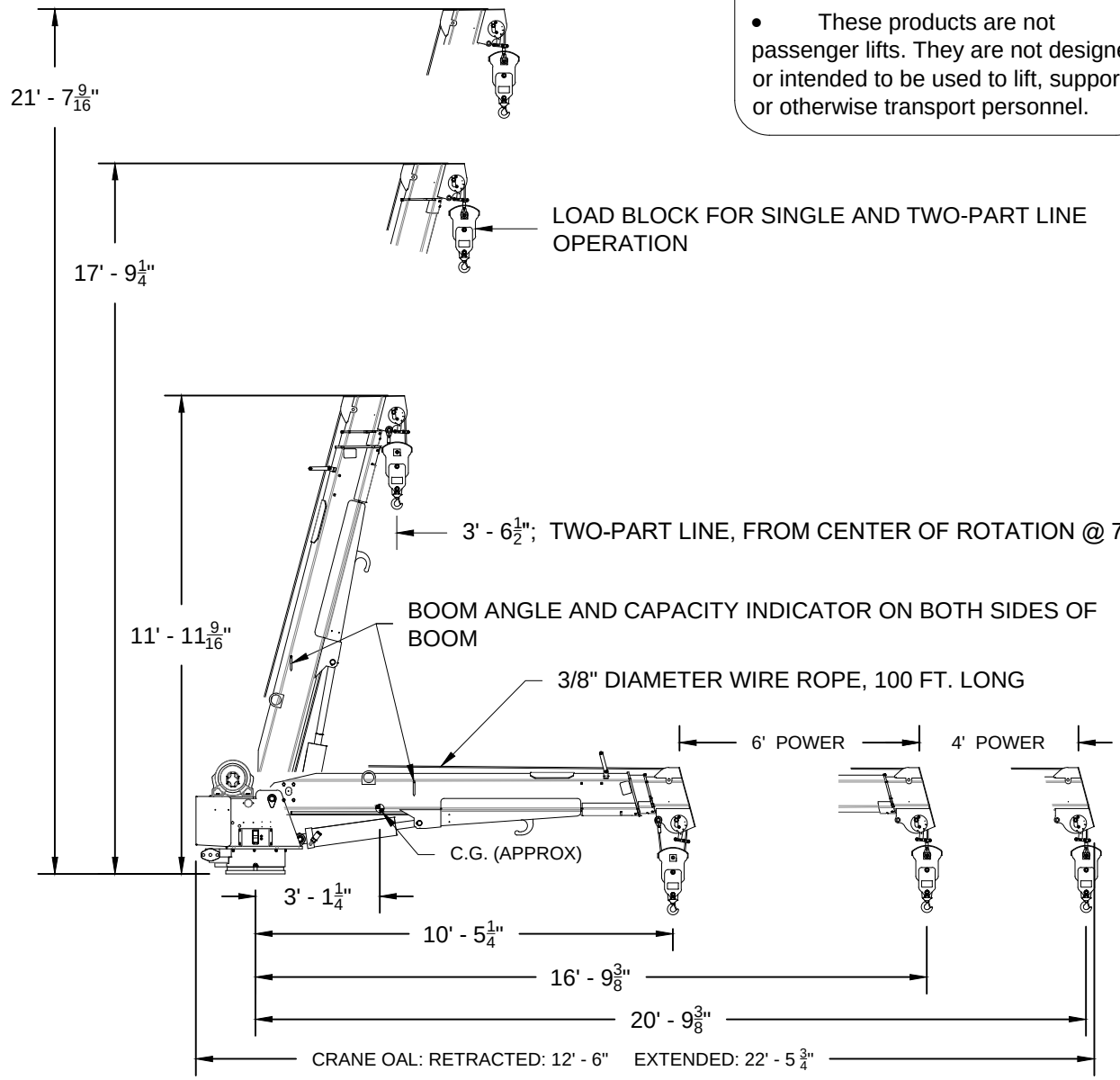

VENTURO® VENCO VENTURO INDUSTRIES LLC CINCINNATI, OHIO	TITLE INSTALLATION DIMENSIONS	DATE 10-03-24A	SECTION C100
	HT40/45/50KX-20' BOOM	SUPERSEDES 05-25-23	26894

WARNING

- These products are not passenger lifts. They are not designed or intended to be used to lift, support, or otherwise transport personnel.

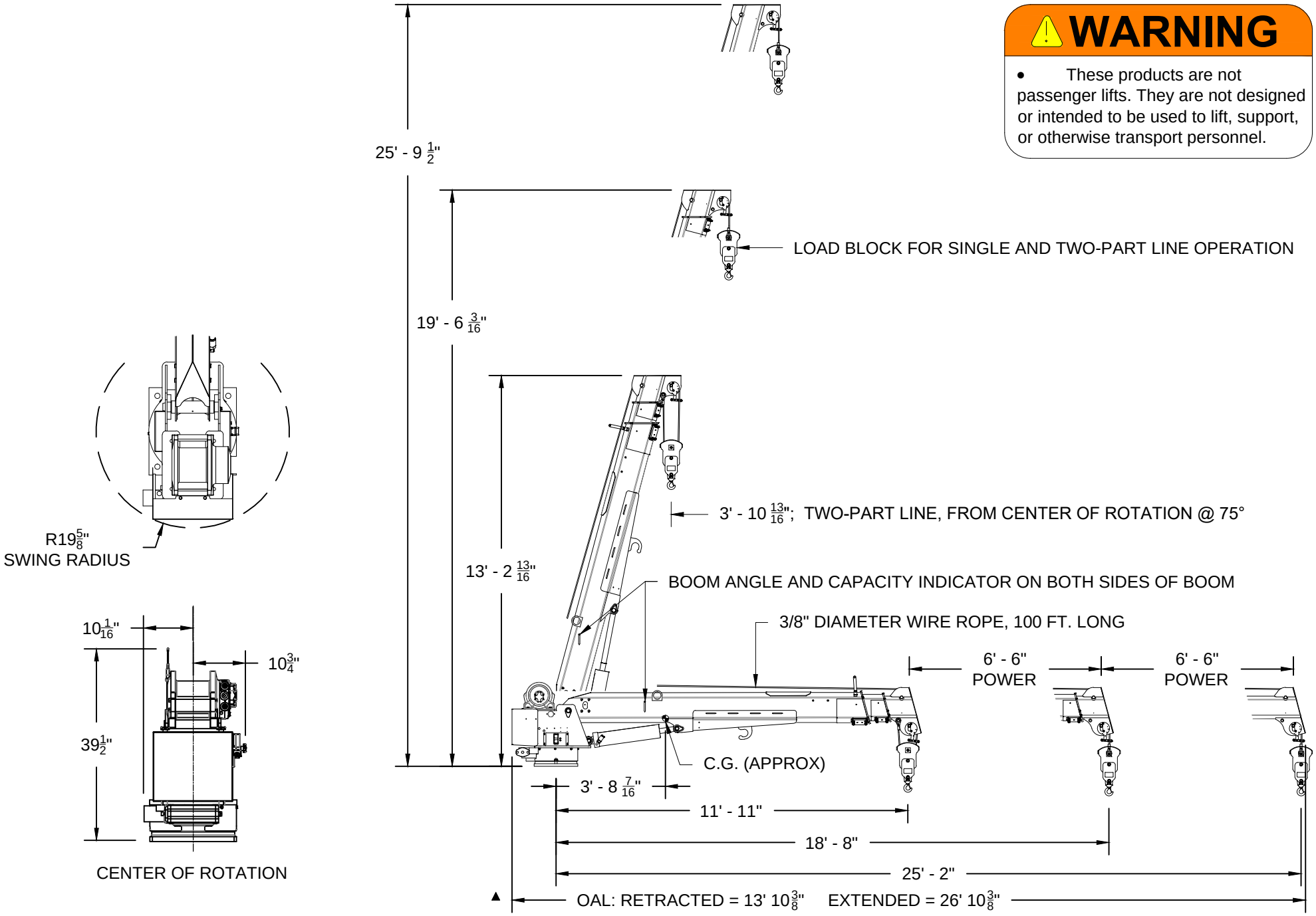

VENTURO® VENCO VENTURO INDUSTRIES LLC CINCINNATI, OHIO	TITLE INSTALLATION DIMENSIONS	DATE 10-03-24A	SECTION C100
	HT40/45/50KX-25' BOOM	SUPERSEDES 05-25-23	26893

⚠ WARNING

- These products are not passenger lifts. They are not designed or intended to be used to lift, support, or otherwise transport personnel.

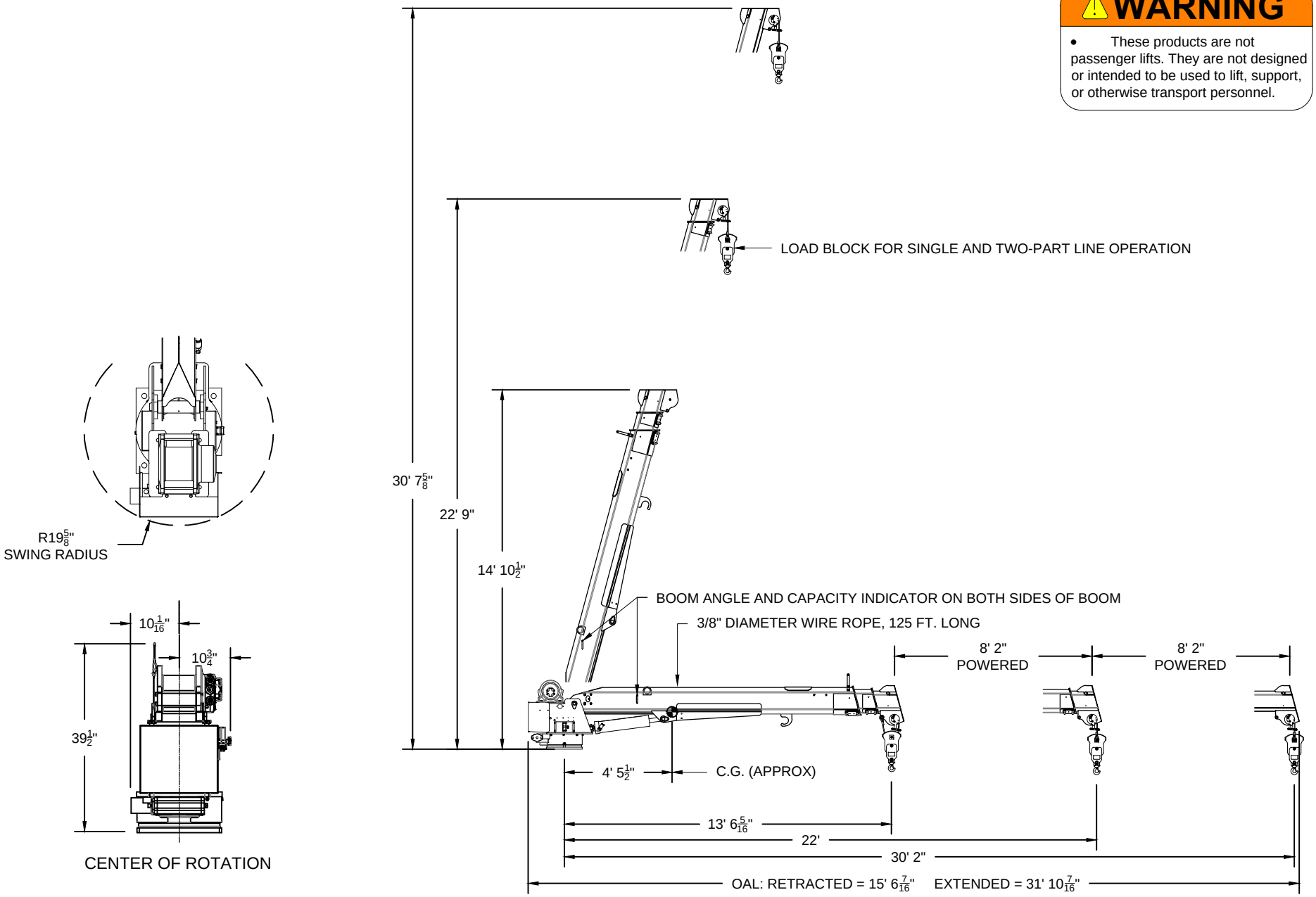

VENTURO® VENCO VENTURO INDUSTRIES LLC CINCINNATI, OHIO	TITLE INSTALLATION DIMENSIONS	DATE 10-03-24B	SECTION C100
	▲ HT45/50KX-30' BOOM	SUPERSEDES 05-26-23A	24161

HT40/45/50KX SERIES MOUNTING DIMENSIONS

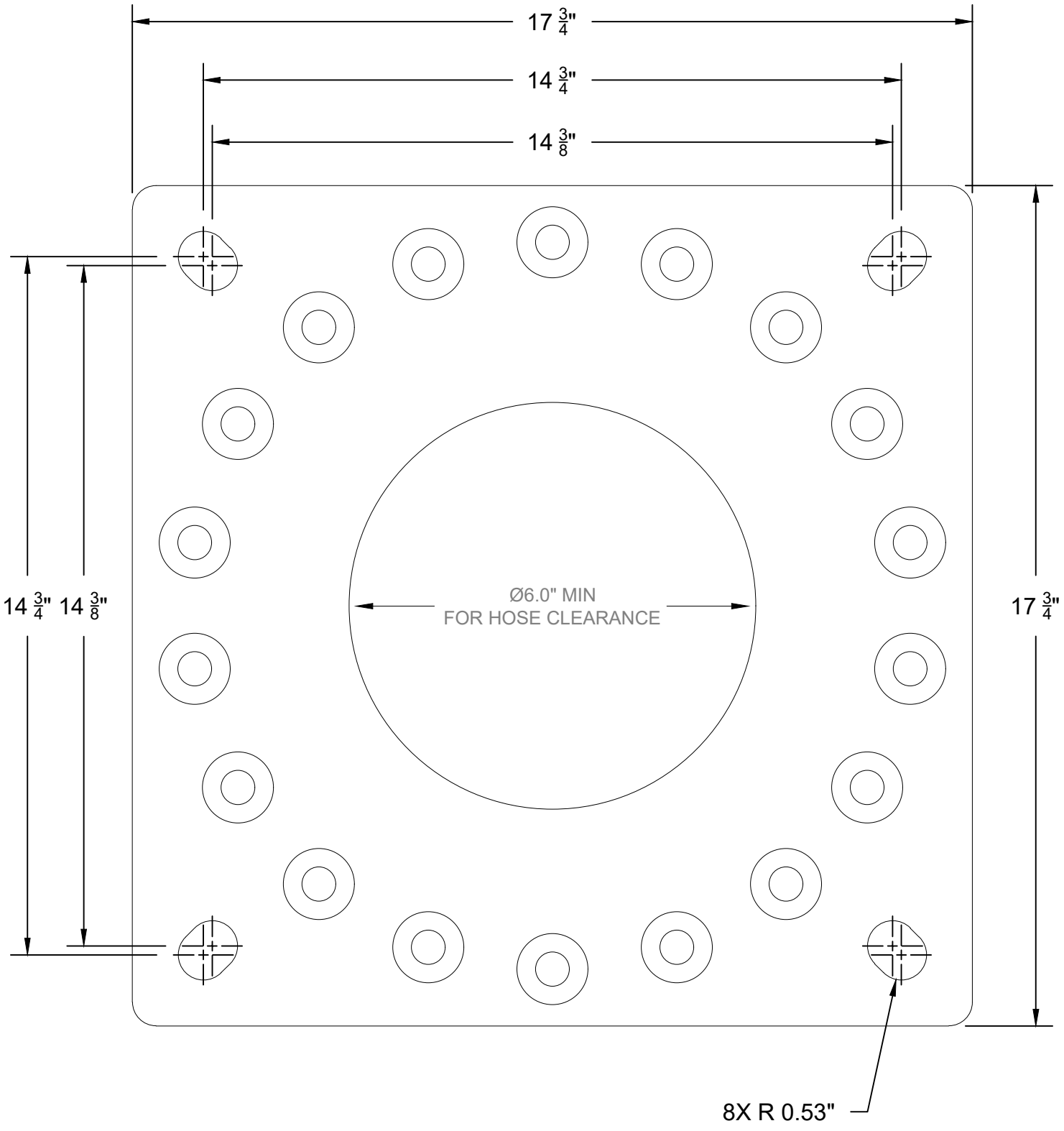

VENTURO®

VENCO VENTURO INDUSTRIES LLC
CINCINNATI, OHIO

TITLE	DATE	SECTION
MOUNTING DIMENSIONS	09-03-24A	C100
HT40/45/50KX SERIES	SUPERSEDES 05-25-23	26892

HT50KX, 10'-16'-20' BOOM

▲ CRANE SERIAL NUMBER: _____

MAXIMUM LOAD CAPACITY CHART

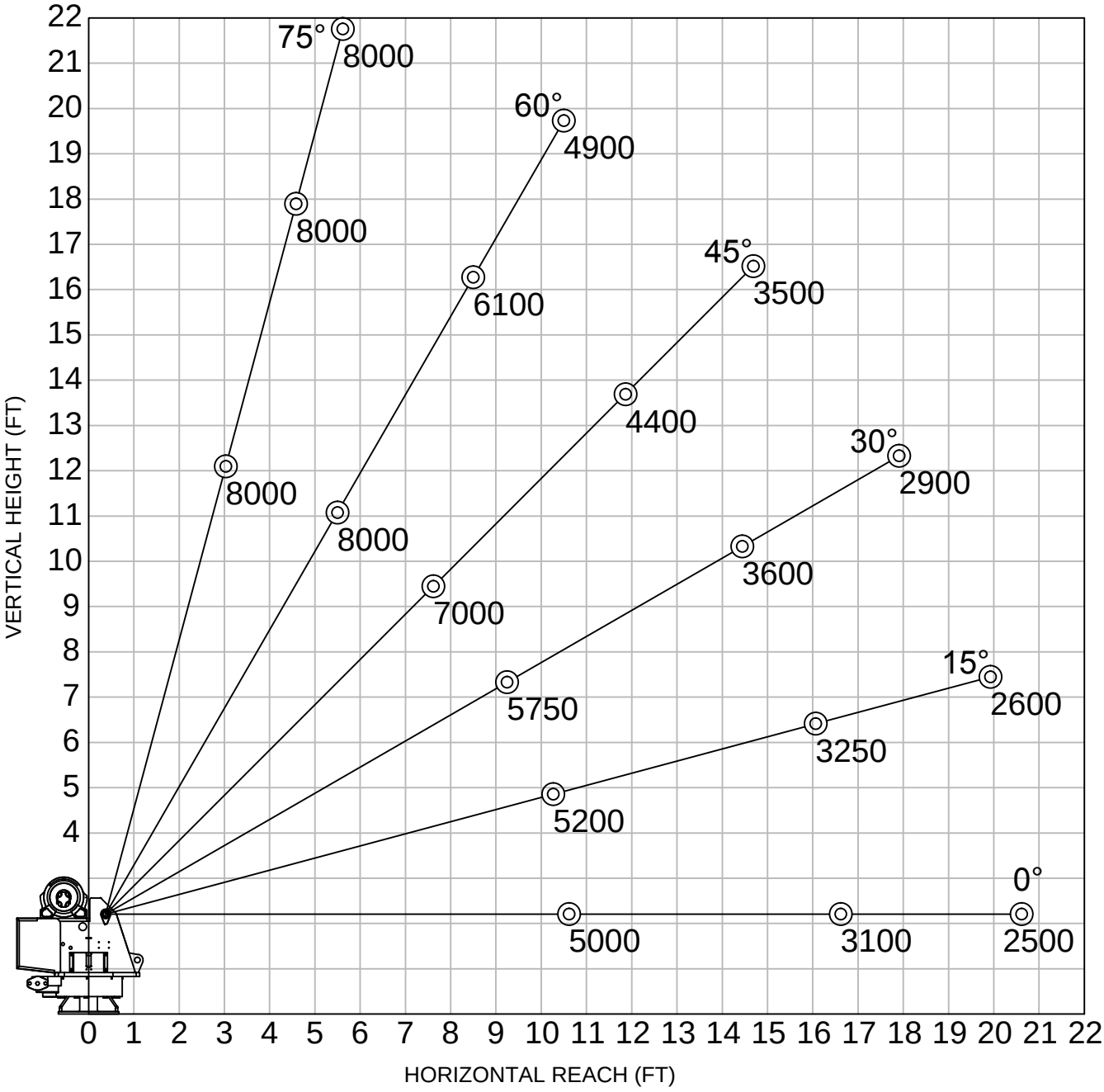

WEIGHT OF LOAD HANDLING DEVICES ARE PART OF THE LOAD AND MUST BE DEDUCTED FROM THE GROSS CAPACITY.

LOAD BLOCK USAGE

1 PART LINE FOR LOADS LESS THAN 4000 LBS

2 PART LINE FOR LOADS OF 4000 LBS AND GREATER

WEIGHT OF LOAD BLOCK = 51 LBS

HT50KX, 12'-18.5'-25' BOOM

▲ CRANE SERIAL NUMBER: _____

MAXIMUM LOAD CAPACITY CHART

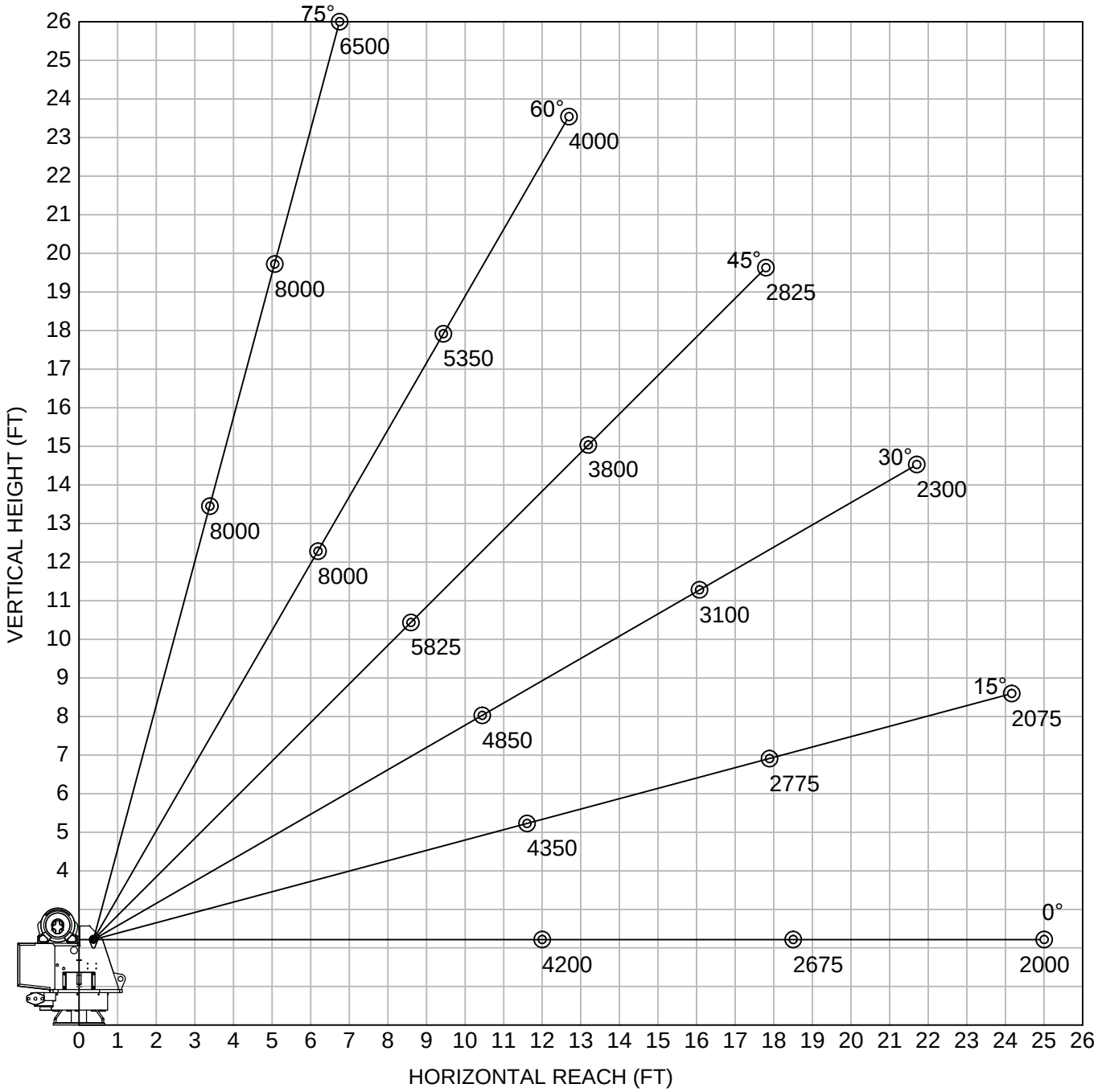

WEIGHT OF LOAD HANDLING DEVICES ARE PART OF THE LOAD AND MUST BE DEDUCTED FROM THE GROSS CAPACITY.

LOAD BLOCK USAGE

1 PART LINE FOR LOADS LESS THAN 4000 LBS

2 PART LINE FOR LOADS OF 4000 LBS AND GREATER

WEIGHT OF LOAD BLOCK = 51 LBS

VENTURO® ▲ VENCO VENTURO INDUSTRIES LLC CINCINNATI, OHIO	TITLE MAXIMUM LOAD CAPACITY	DATE 05-03-16C	SECTION C100
	HT50KX, 12'-18.5'-25' BOOM	SUPERSEDES 04-24-14B	23122

HT50KX, 13' - 22' - 30' BOOM

CRANE SERIAL NUMBER: _____

MAXIMUM LOAD CAPACITY CHART

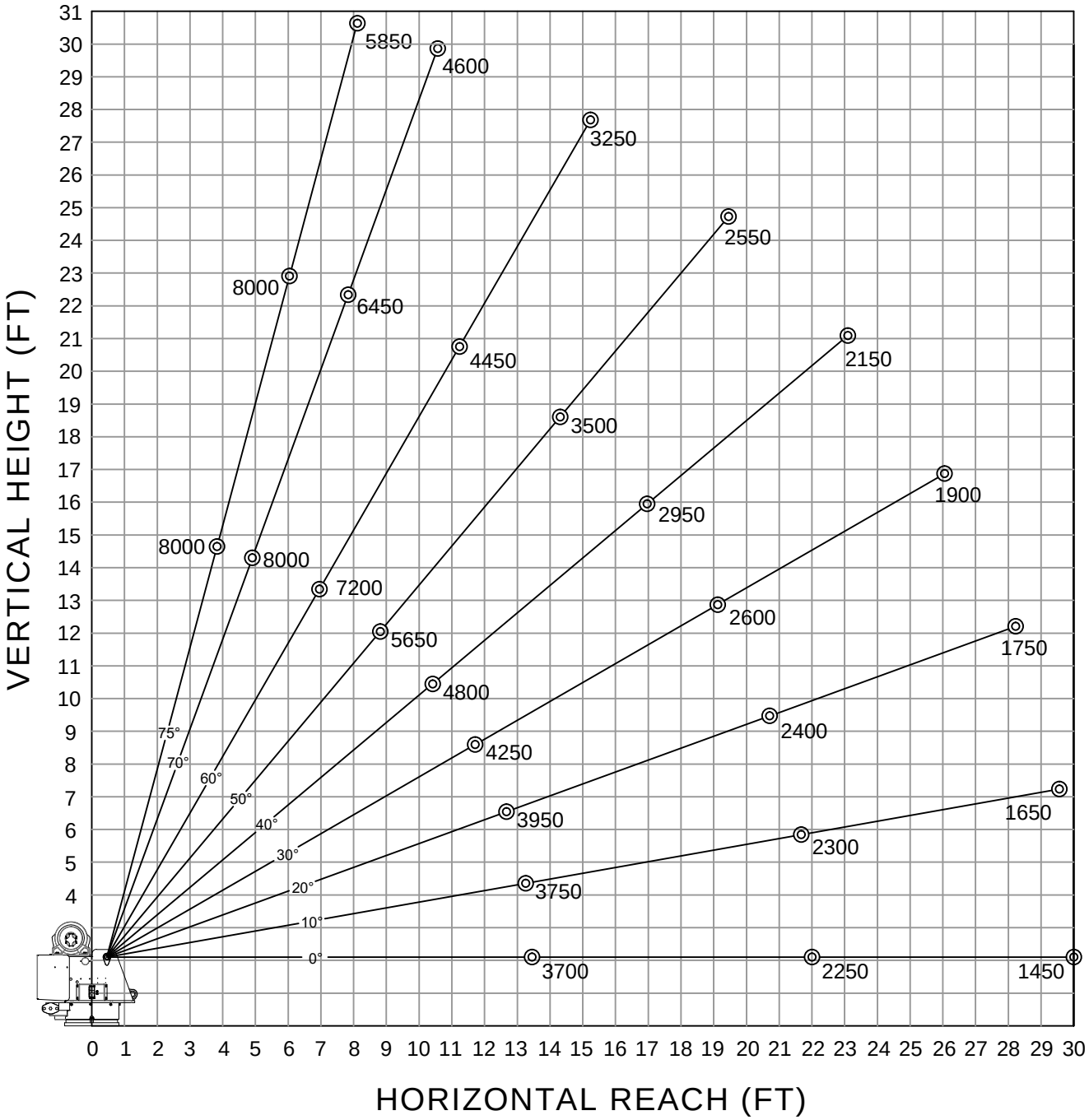

WEIGHT OF LOAD HANDLING DEVICES ARE PART OF THE LOAD AND MUST BE DEDUCTED FROM THE GROSS CAPACITY.

LOAD BLOCK USAGE

1-PART LINE FOR LOADS LESS THAN 4000 LBS
2-PART LINE FOR LOADS OF 4000 LBS AND GREATER
WEIGHT OF LOAD BLOCK = 51 LBS

VENTURO® VENCO VENTURO INDUSTRIES LLC CINCINNATI, OHIO	TITLE MAXIMUM LOAD CAPACITY	DATE 08-15-24	SECTION C100
	HT50KX-30'	SUPERSEDES -	24093

SECTION 150

SAFETY

VENCO VENTURO INDUSTRIES LLC
CINCINNATI, OHIO

7607150A

VEHICLE & CRANE MOUNTED ELECTRICAL HAZARD SIGN APPLICATION & INFORMATION

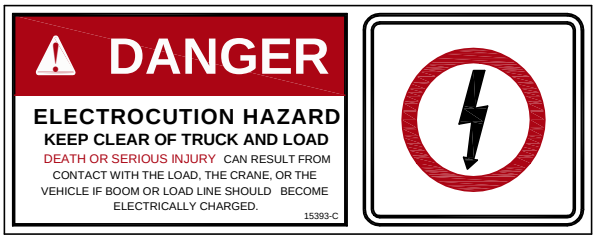

SIGN NO. 15393 DISPLAYS THE INTERNATIONAL SYMBOL FOR ELECTRICITY AND WARNS OF DANGER FROM AN ELECTRICALLY CHARGED VEHICLE, CRANE, OR LOAD. FOUR ARE RECOMMENDED (ONE FOR EACH SIDE AND ONE FOR EACH END OF VEHICLE) TO BE APPLIED IN LOCATIONS WHICH ARE READILY VISIBLE TO GROUND PERSONNEL.

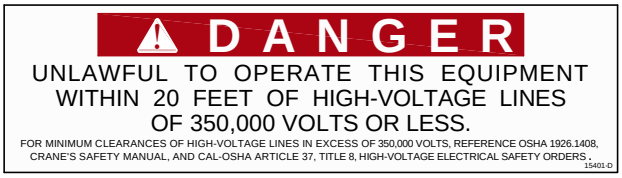

SIGN NO. 15401 PROVIDES ADDITIONAL WARNING OF LEGAL REQUIREMENTS WHEN OPERATING NEAR HIGH VOLTAGE LINES. THIS SIGN IS PLACED ON THE CONTROL PENDANT SIDE OF BOOM.

Table A - Minimum Clearance Distances

Voltage (nominal, kV, alternating current)	Minimum clearance distance (feet) *
Up to 50	10
over 50 - 200	15
over 200 - 350	20
over 350 - 500	25
over 500 - 750	35
over 750 - 1000	45
Over 1000	(as established by the utility owner/operator or registered professional engineer who is a qualified person with respect to electrical power transmission and distribution).

Table T - Minimum Clearance Distances While Traveling With No Load

Voltage (nominal, kV, alternating current)	While traveling - minimum clearance distance (feet) *
0 - 0.75	4
over 0.75 - 50	6
over 50 - 345	10
over 345 - 750	16
over 750 - 1000	20
Over 1000	(as established by the utility owner/operator or registered professional engineer who is a qualified person with respect to electrical power transmission and distribution).

* NOTE: ENVIRONMENTAL CONDITIONS SUCH AS FOG, SMOKE, OR PRECIPITATION MAY REQUIRE INCREASED CLEARANCES

CRANE SAFETY AND HAZARDS
HT SERIES CRANES

CAUTIONS

1. INSPECT VEHICLE AND CRANE, INCLUDING OPERATION, PRIOR TO USE DAILY.
2. DO NOT USE THIS EQUIPMENT EXCEPT ON SOLID, LEVEL SURFACE WITH CRANE MOUNTED ON FACTORY-RECOMMENDED TRUCK.
3. BEFORE OPERATING THE CRANE, REFER TO MAXIMUM LOAD (CAPACITY) CHART ON CRANE FOR OPERATING (LOAD) LIMITATIONS.
4. DO NOT OPERATE, WALK, OR STAND BENEATH BOOM OR A SUSPENDED LOAD.
5. ATTACH PENDANT CORD SUPPORT SNAP TO ATTACHMENT POINT BEFORE PLUGGING IN PENDANT.
6. UNPLUG PENDANT AND DISENGAGE PTO SYSTEM WHEN CRANE NOT IN USE.
7. FOR TRAVEL, BOOM MUST BE IN STOWED POSITION.

DANGER

- THIS CRANE IS NOT A PASSENGER LIFT
- IT IS NOT DESIGNED OR INTENDED TO BE USED TO LIFT, SUPPORT, OR OTHERWISE TRANSPORT PERSONNEL.

YOU MUST NOT OPERATE THIS CRANE UNLESS

1. YOU HAVE BEEN TRAINED IN THE SAFE OPERATION OF THIS CRANE
   AND
2. YOU KNOW AND FOLLOW THE SAFETY AND OPERATING RECOMMENDATIONS CONTAINED IN THE MANUFACTURER'S MANUALS, YOUR EMPLOYER'S WORK RULES, AND APPLICABLE GOVERNMENT REGULATIONS. AN UNTRAINED OPERATOR SUBJECTS HIMSELF AND OTHERS TO DEATH OR SERIOUS INJURY.

ELECTROCUTION HAZARD

- THIS MACHINE IS NOT INSULATED.
- MAINTAIN SAFE CLEARANCES FROM ELECTRICAL LINES AND APPARATUS.
- YOU MUST ALLOW FOR BOOM SWAY, ROCK OR SAG, AND ELECTRICAL LINE AND LOADLINE SWAYING.
- THIS LIFTING DEVICE DOES NOT PROVIDE PROTECTION FROM CONTACT WITH OR PROXIMITY TO AN ELECTRICALLY CHARGED CONDUCTOR.
- YOU MUST MAINTAIN A CLEARANCE OF AT LEAST 20 FEET BETWEEN ANY PART OF THE CRANE, LOADLINE, OR LOAD, AND ANY ELECTRICAL LINE OR APPARATUS CARRYING UP TO 350 kV (SEE NEW CHART). ADDITIONAL CLEARANCES ARE REQUIRED FOR VOLTAGES IN EXCESS OF 50,000 VOLTS. REFER TO DRAWING 15394 FOR ADDITIONAL INFORMATION.
- **DEATH OR SERIOUS INJURY** WILL RESULT FROM CONTACT OR INADEQUATE CLEARANCE.

WINCH SAFETY WARNINGS

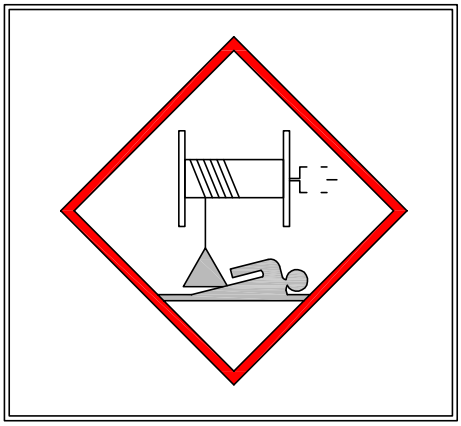

DANGER

- DO NOT DISENGAGE WINCH UNDER LOAD

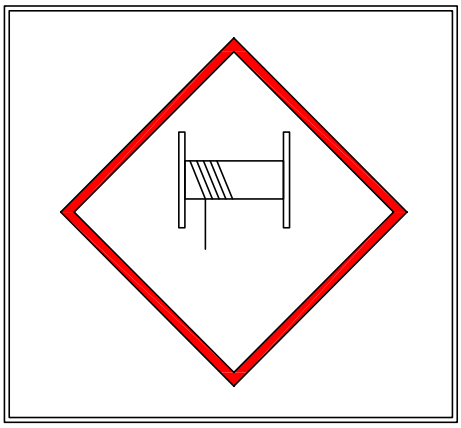

DANGER

- THE LAST [5] (DEAD) WRAPS OF WIRE ROPE MUST BE LEFT ON TO ASSIST WIRE ROPE CLAMP IN HOLDING LOAD

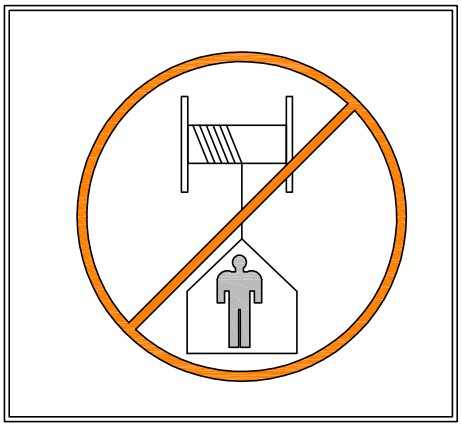

WARNING

- Winches are not to be used to lift, support, or otherwise transport personnel

PART NO.: 15398

DECAL: UNPLUG REMOTE CONTROL

FUNCTION: To inform the operator to unplug remote control when not being used.

QUANTITY: 1

PLACEMENT: Right side of housing.

PART NO.: 15401

DECAL: UNLAWFUL TO OPERATE

FUNCTION: To inform the operator of proper operation in vicinity of power lines.

QUANTITY: 1

PLACEMENT: Right side of housing.

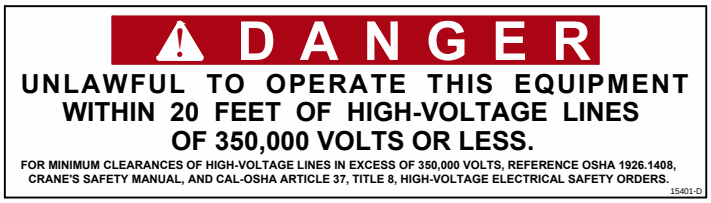

PART NO.: 19314-1 [LEFT] & -2 [RIGHT]

DECAL: MANUAL OVERRIDE (NON-PROP)

FUNCTION: To inform the operator of manual override locations.

QUANTITY: 1 EACH

PLACEMENT: Inside of rear cover.

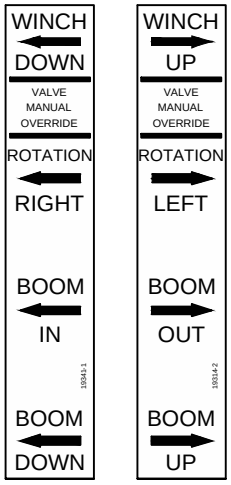

PART NO.: 22768-1 [LEFT] & -2 [RIGHT]

DECAL: MANUAL OVERRIDE (PROPORTIONAL)

FUNCTION: To inform the operator of manual overide locations.

QUANTITY: 1

PLACEMENT: Inside of rear cover.

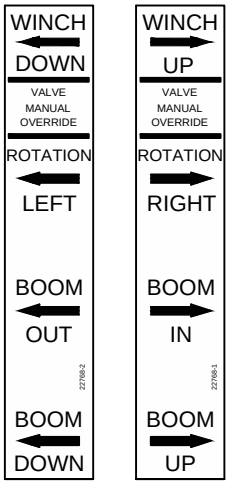

VENTURO® VENCO VENTURO INDUSTRIES LLC CINCINNATI, OHIO	TITLE DECAL DRAWING & LIST	DATE 11-30-22E	SECTION C150
	HT40/50/60/66 SERIES	SUPERSEDES 02-21-14D	22181A

▲

PART NO.: 23068-1 [LEFT] & -2 [RIGHT]

DECAL: MANUAL OVERRIDE
(HT66KXX w/ TH-2 Winch ONLY)

FUNCTION: To inform the operator of manual overide locations.

QUANTITY: 1

PLACEMENT: Inside of rear cover.

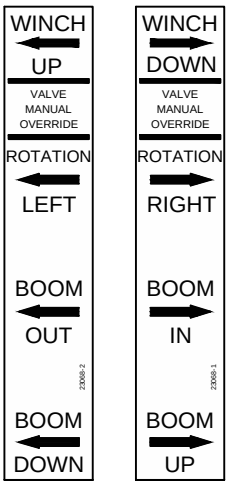

PART NO.: 19315-1

DECAL: SHUT OFF (NON-PROPORTIONAL)

FUNCTION: To show the operator how to override master shut off valve.

QUANTITY: 1

PLACEMENT: Inside rear cover.

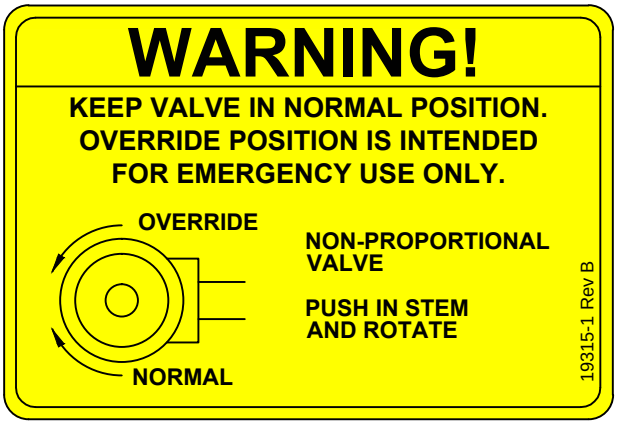

PART NO.: 19315-2

DECAL: MANUAL OVERRIDE (PROPORTIONAL)

FUNCTION: To show the operator how to override proportional valve.

QUANTITY: 1

PLACEMENT: Inside rear cover.

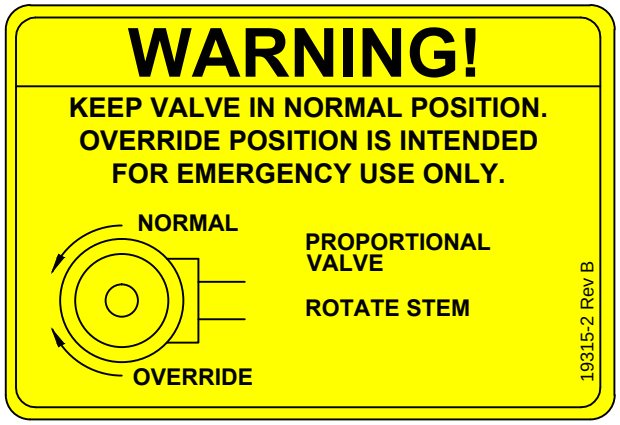

PART NO.: 20834

DECAL: MANUAL OVERRIDE NOTICE

FUNCTION: To inform the operator of manual override locations.

QUANTITY: 1

PLACEMENT: Inside rear cover.

PART NO.: 15390

DECAL: CAUTION - INSPECT VEHICLE & CRANE

FUNCTION: To inform the operator of key operating requirements.

QUANTITY: 1

PLACEMENT:Left side of rear cover.

PART NO.: 15391

DECAL: DANGER - NOT PASSENGER LIFT

FUNCTION: To inform the operator not to lift, support or transport personnel, and to ensure that crane operator is adequately trained.

QUANTITY: 1

PLACEMENT:Left side of rear cover.

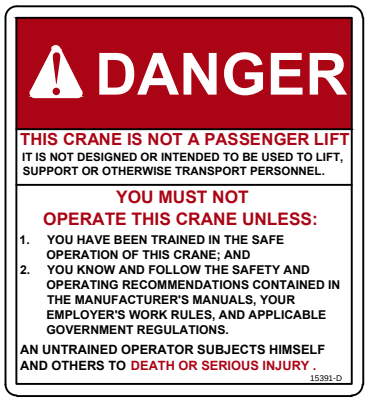

PART NO.: 15392

DECAL: DANGER - ELECTROCUTION HAZARD

FUNCTION: To inform the operator that the machine (crane) represents an electrocution hazard should it come too near or in contact with electrical voltage source.

QUANTITY: 1

PLACEMENT:Left side of rear cover.

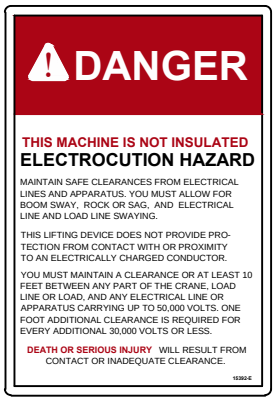

PART NO.: 22499

DECAL: KNOW YOUR SIGNALS

FUNCTION: To inform the operator of proper signals.

QUANTITY: 1

PLACEMENT:Right side of rear cover.

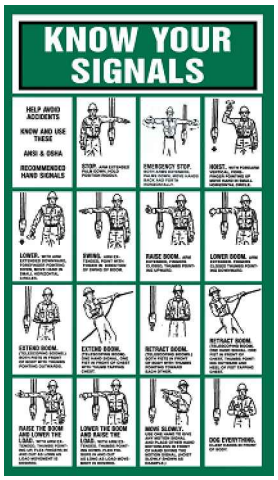

VENTURO® VENCO VENTURO INDUSTRIES LLC CINCINNATI, OHIO	TITLE DECAL DRAWING & LIST	DATE 11-30-22F	SECTION C150
	HT40/50/60/66 SERIES	SUPERSEDES 02-21-14E	22181C

PART NO.: 17389

DECAL: MEDIUM VENTURO

FUNCTION: Branding.

QUANTITY: 1

PLACEMENT: Rear cover.

PART NO.: 28520

DECAL: MODEL HT50KX

FUNCTION: Branding.

QUANTITY: 2

PLACEMENT: Boom.

PART NO.: 20927

DECAL: CRANE STABILITY

FUNCTION: To inform the operator of the crane's lifting capacity throughout the entire rotation.

QUANTITY: 1

PLACEMENT: In prominent location, so it is easily seen and readily identifiable.

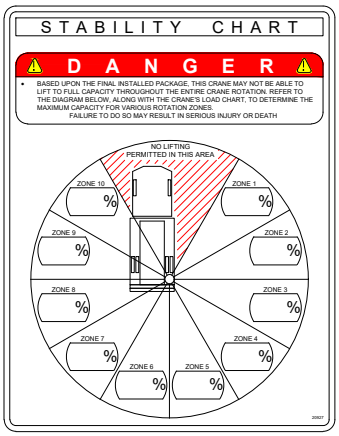

VENTURO® VENCO VENTURO INDUSTRIES LLC CINCINNATI, OHIO	TITLE DECAL DRAWING & LIST	DATE 06-16-23	SECTION C150
	HT50KX	SUPERSEDES -	28521

PART NO.: 24091 & 24092

DECAL: HT50-30' CRANE CAPACITY

FUNCTION: To show the operator the operating capacities of the crane

QUANTITY: 1 each

PLACEMENT: Right side of boom, Left side of boom

LEFT SIDE OF BOOM

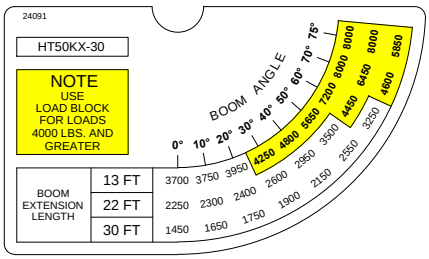

24091

RIGHT SIDE OF BOOM

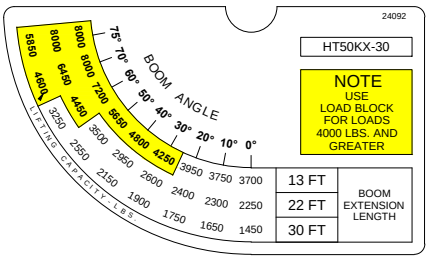

24092

PART NO.: 22877-1 & 22877-2

DECAL: HT50-25' CRANE CAPACITY

FUNCTION: To show the operator the operating capacities of the crane

QUANTITY: 1 each

PLACEMENT: Right side of boom, Left side of boom

LEFT SIDE OF BOOM

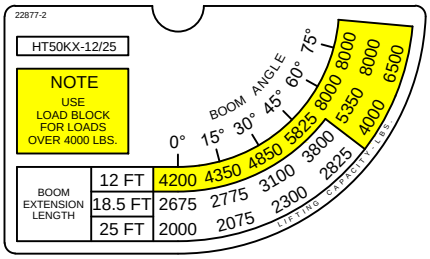

22877-2

RIGHT SIDE OF BOOM

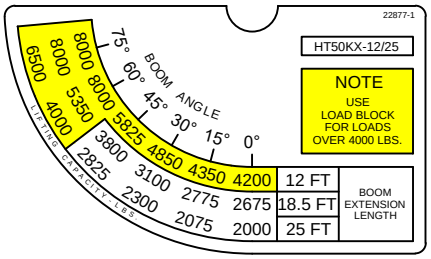

22877-1

PART NO.: 22352-1 & 22352-2

DECAL: HT50-20' CRANE CAPACITY

FUNCTION: To show the operator the operating capacities of the crane

QUANTITY: 1 each

PLACEMENT: Right side of boom, Left side of boom

LEFT SIDE OF BOOM

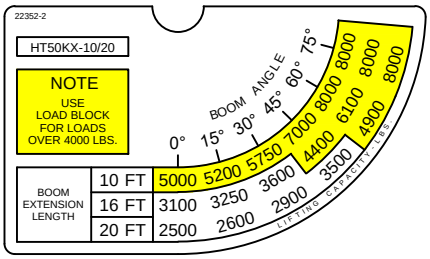

22352-2

RIGHT SIDE OF BOOM

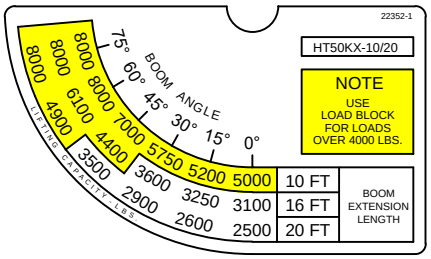

22352-1

S P A C E I N T E N T I O N A L L Y L E F T B L A N K

VENTURO® VENCO VENTURO INDUSTRIES LLC CINCINNATI, OHIO	TITLE BOOM CAPACITY DECALS	DATE 08-15-24	SECTION C150
	HT50 SERIES	SUPERSEDES -	24095

SECTION 200

INSTALLATION

VENCO VENTURO INDUSTRIES LLC
CINCINNATI, OHIO

7607200A

BODY REINFORCEMENT

The truck body must be reinforced and outriggers provided to withstand the combined loads resulting from lifting and the weight of the crane and boom.

The maximum combined overturning moment for the HT40KX is 45,000 ft. lbs. and for the HT50KX is 55,000 ft. lbs.

The maximum vertical loads for the HT40/50KX are listed based on the boom length:

	HT40KX		HT50KX		
BOOM LENGTH (FT)	20'	25'	20'	25'	30'
MAX VERTICAL LOAD (LBS)	7900	8050	9900	10050	10250

CRANE MOUNTING

The crane base plate or mounting pedestal must be bolted to the body reinforcing plate with four [4] grade eight (8) bolts of 1" diameter with coarse threads, torqued to 680 foot pounds.

▲ A 6"- 8" diameter hose clearance hole must be cut in this plate to allow the hoses to swing and coil freely.

ROTATION POSITIONING

The HT cranes are shipped with the boom rotated as shown on drawing 20051. It can be in any position that pleases the user since the boom can always reach the storage and travel position by rotating one way or the other.

HYDRAULIC CONNECTIONS

The crane is furnished with a pressure, return and a case drain hoses that come down through the center of the housing. The pressure and return hoses connect to two hydraulic swivels to prevent damage while rotating the crane right and left.

⚠ C A U T I O N ⚠

- THE CASE DRAIN HOSE MUST BE A DEDICATED RETURN HOSE UNRESTRICTED TO TANK / RESERVOIR. DO NOT 'T' INTO ANOTHER EXISTING RETURN HOSE OR DAMAGE TO THE HYD. WINCH FROM BACK-PRESSURE WILL OCCUR. BACK-PRESSURE IN EXCESS OF 200 PSI WILL DAMAGE THE HYD. WINCH.

Arrange the pressure & return hoses in the compartment below the crane so that they are connected in a relaxed position while the crane is at the midpoint of the 400 degree rotation range -- regardless of the final position of the boom during storage/travel. See installation pages 22913 for more information on hose connections.

▲ ELECTRICAL CONNECTIONS

A 9 ft. electrical power lead - intended for 12V DC only - comes down through the center of the crane base plate along with the hoses. This power lead should be slacked in the compartment so that it remains relaxed throughout the 400 degree rotation of the crane.

A 20 amp circuit breaker is mounted on the crane and protects the crane's internal wiring and solenoid coils. The 20 amp circuit breaker does not protect the 9 ft. power lead. For added protection, the 9 ft. lead can be connected to a 20 amp protected circuit that, if possible, is powered only when the vehicle engine is running.

HYDRAULIC FLUID

Average Climate	Type of Oil
Cold to Moderate	ISO Grade AW 46
Warm to Hot	ISO Grade AW 68

The fluid should have the highest anti-wear characteristics and treated to inhibit rust and oxidation.

▲ HYDRAULIC HOSES & LINES

The minimum sizes for lines and hoses are as follows:

HYDRAULIC LINES	NON-PROPORTIONAL	PROPORTIONAL
PRESSURE	3/8"	5/8"
RETURN	1/2"	3/4"
SUCTION	3/4"	1-1/4"

RESERVOIR

The PTO reservoir should have a capacity of 10 gallons (non-proportional) or 25 gallons (proportional) fitted with 100 mesh suction screen, 10 micron return line filter, and filler/breather cap.

▲ PTO PUMP

The PTO pump should be sized to allow an engine idle speed range that will deliver approximately 2.5 GPM for the HT40 non-proportional, 12.0 GPM for the HT40 proportional, 3.0 GPM for the HT50 non-proportional, or 12.0 GPM for the HT50 proportional. These cranes' relief pressures are all set at 3000 psi.

▲ PTO START-UP

Before connecting the PTO system to the crane pressure and return hoses, connect the PTO pressure and return lines together at the bulkhead. Operate the PTO system for about two (2) minutes per gallon of reservoir capacity (10 gallon reservoir = 20 minutes / 25 gallon = 50 minutes) to flush out the lines and filter all the fluid several times.

ENGINE START/STOP & THROTTLE CONTROL

If your crane was purchased with optional engine start/stop and throttle control, refer to drawing 22615 in the replacement parts section for further information.

400° ROTATION STOP LOCATION

Crane is shipped in "CURBSIDE" mounting configuration.

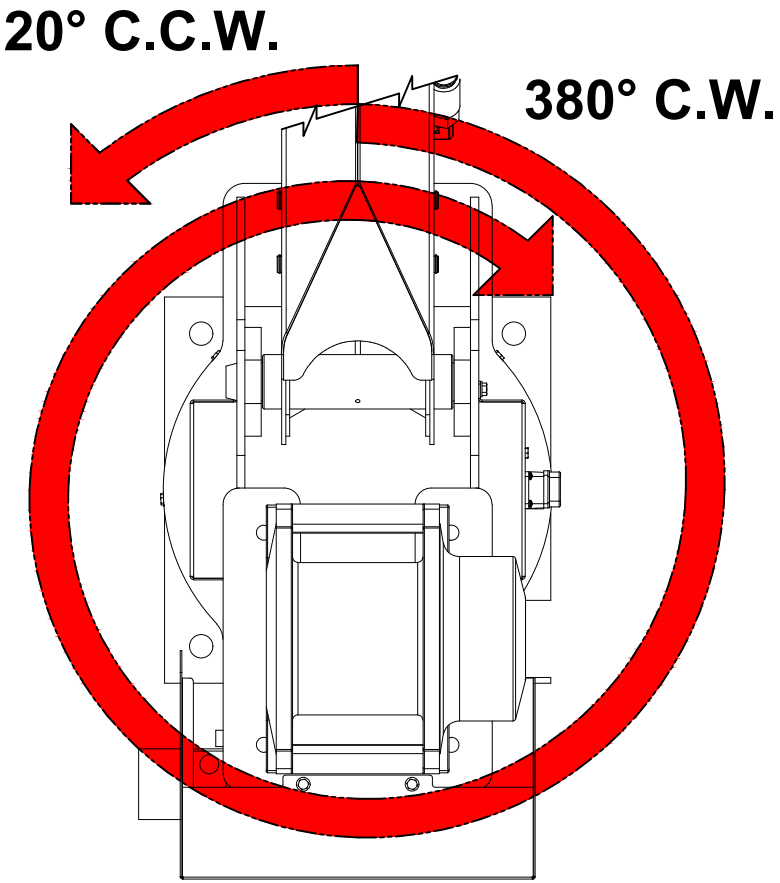

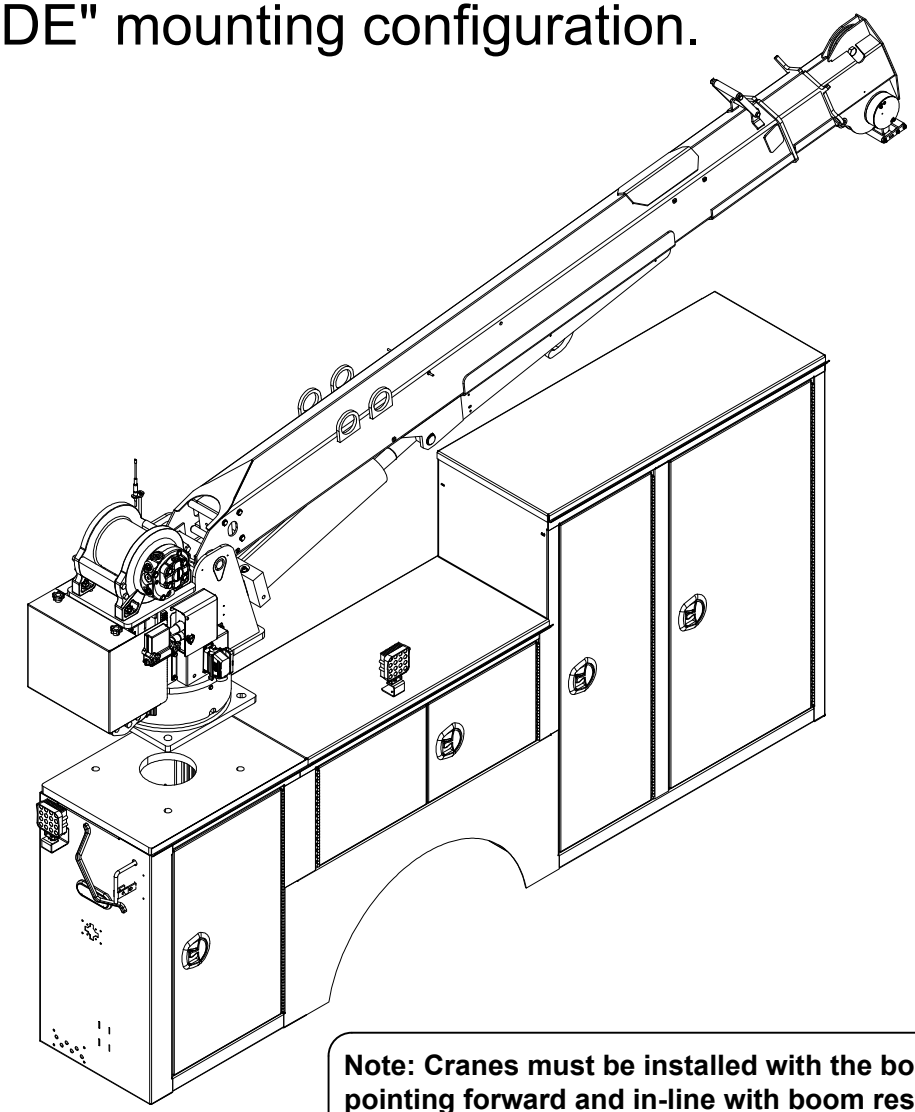

Note: Cranes must be installed with the boom pointing forward and in-line with boom rest.

Contact Venturo Tech Support for assistance. 1-800-226-2238.

STABILITY TEST - HT50-20'

Overview

Venturo follows the guidelines of ANSI B30.5 in defining stability. Generally speaking, a truck is considered stable as long as it is not on the verge of tipping - i.e. with the truck level, at least one tire on each corner of the truck must remain in contact with the ground.

It is important to note that nearly every installation is unique and will, therefore, typically require stability testing.

The procedure outlined below follows ANSI's (B30.5 - 5-1.1.1) specified "maximum load rating" of 85% of truck stability.

Testing Procedure

1. Locate the truck on firm, level ground and set parking brake.

2. Fully deploy stabilizers, making sure they are firmly in contact with supportive ground; use stabilizer pads as required. The tires of the truck should remain in full contact with the ground.

3. Inspect wire rope and other key components of crane (consult owners manual for more information).

4. Conduct an operational check of all crane functions.

5. Locate the Overload Pressure Switch at the base of the elevation cylinder
   5.1. Disconnect the black & white wires from the housing and then connect the black & white wires together to by-pass the Overload Pressure Switch for the stability test. ***Note: The black & white wires MUST be reconnected to the Overload Pressure Switch after the stability test has been completed.***

6. Use a ***Test Weight*** weighing a ***minimum*** of ***2941 lbs***, (includes load block weight of 51 lbs.) to a ***maximum of 3030 lbs***.

7. Position the boom level and fully retracted.

8. Referring to the Stability Chart (drawing 20907) rotate the crane to a position between 1 and 2 o'clock (truck cab is facing 12 o'clock) to begin testing.

9. Use the winch to lift the Test Weight; DO NOT allow the weight to be more than 6" off the ground at any time during testing (for safety).

10. Using the test weight, extend the boom slowly, until one of two conditions occur: ▲
    10.1. Full extension is reached - Mark the ZONE in question **100%**
    10.2. The truck becomes unstable i.e. a tire lifts off the ground
        10.2.1. Retract the boom until at least one tire on each corner of the truck is making contact with the ground
        10.2.2. Use the formula below to determine the allowable ***% of Rated Capacity*** for the ZONE in question:

11. Note: The "***Max Stable Reach in inches"*** is measured from the ***center of rotation*** of the crane housing to the ***lifting load hook.***

$$\textbf{\% Rated Capacity} = \frac{\textbf{"Max Stable Reach in inches"}}{\textbf{247}} \times \textbf{100}$$

12. Record the ***% of Rated Capacity*** in the appropriate blank (region) on the Crane Stability page (ref. 20907) and decal.

13. Repeat Steps 7 through 12 for each ZONE on the stability page.

STABILITY TEST - HT50-25'

Overview

Venturo follows the guidelines of ANSI B30.5 in defining stability. Generally speaking, a truck is considered stable as long as it is not on the verge of tipping - i.e. with the truck level, at least one tire on each corner of the truck must remain in contact with the ground.

It is important to note that nearly every installation is unique and will, therefore, typically require stability testing.

The procedure outlined below follows ANSI's (B30.5 - 5-1.1.1) specified "maximum load rating" of 85% of truck stability.

Testing Procedure

1. Locate the truck on firm, level ground and set parking brake.

2. Fully deploy stabilizers, making sure they are firmly in contact with supportive ground; use stabilizer pads as required. The tires of the truck should remain in full contact with the ground.

3. Inspect wire rope and other key components of crane (consult owners manual for more information).

4. Conduct an operational check of all crane functions.

5. Locate the Overload Pressure Switch at the base of the elevation cylinder
   - 5.1. Disconnect the black & white wires from the housing and then connect the black & white wires together to by-pass the Overload Pressure Switch for the stability test. ***Note: The black & white wires MUST be reconnected to the Overload Pressure Switch after the stability test has been completed.***

6. Use a ***Test Weight*** weighing a ***minimum*** of ***2353 lbs***, (includes load block weight of 51 lbs.) to a ***maximum of 2675 lbs***.

7. Position the boom level and fully retracted.

8. Referring to the Stability Chart (drawing 20907) rotate the crane to a position between 1 and 2 o'clock (truck cab is facing 12 o'clock) to begin testing.

9. Use the winch to lift the Test Weight; DO NOT allow the weight to be more than 6" off the ground at any time during testing (for safety).

10. Using the test weight, extend the boom slowly, until one of two conditions occur: ▲
    - 10.1. Full extension is reached - Mark the ZONE in question **100%**
    - 10.2. The truck becomes unstable i.e. a tire lifts off the ground
      - 10.2.1. Retract the boom until at least one tire on each corner of the truck is making contact with the ground
      - 10.2.2. Use the formula below to determine the allowable ***% of Rated Capacity*** for the ZONE in question:

11. Note: The "***Max Stable Reach in inches"*** is measured from the ***center of rotation*** of the crane housing to the ***lifting load hook.***

$$\textbf{\% Rated Capacity} = \frac{\textbf{"Max Stable Reach in inches"}}{\textbf{300}} \textbf{ X 100}$$

12. Record the ***% of Rated Capacity*** in the appropriate blank (region) on the Crane Stability page (ref. 20907) and decal.

13. Repeat Steps 7 through 12 for each ZONE on the stability page.

STABILITY TEST - HT50-30'

Overview

Venturo follows the guidelines of ANSI B30.5 in defining stability. Generally speaking, a truck is considered stable as long as it is not on the verge of tipping - i.e. with the truck level, at least one tire on each corner of the truck must remain in contact with the ground.

It is important to note that nearly every installation is unique and will, therefore, typically require stability testing.

The procedure outlined below follows ANSI's (B30.5 - 5-1.1.1) specified "maximum load rating" of 85% of truck stability.

Testing Procedure

1. Locate the truck on firm, level ground and set parking brake.

2. Fully deploy stabilizers, making sure they are firmly in contact with supportive ground; use stabilizer pads as required. The tires of the truck should remain in full contact with the ground.

3. Inspect wire rope and other key components of crane (consult owners manual for more information).

4. Conduct an operational check of all crane functions.

5. Locate the Overload Pressure Switch at the base of the elevation cylinder
   5.1. Disconnect the black & white wires from the housing and then connect the black & white wires together to by-pass the Overload Pressure Switch for the stability test. ***Note: The black & white wires MUST be reconnected to the Overload Pressure Switch after the stability test has been completed.***

6. Use a ***Test Weight*** weighing a ***minimum*** of ***1700 lbs***, (includes load block weight of 51 lbs.) to a ***maximum of 1870 lbs***.

7. Position the boom level and fully retracted.

8. Referring to the Stability Chart (drawing 20907) rotate the crane to a position between 1 and 2 o'clock (truck cab is facing 12 o'clock) to begin testing.

9. Use the winch to lift the Test Weight; DO NOT allow the weight to be more than 6" off the ground at any time during testing (for safety).

10. Using the test weight, extend the boom slowly, until one of two conditions occur:
    10.1. Full extension is reached - Mark the ZONE in question **100%**
    10.2. The truck becomes unstable i.e. a tire lifts off the ground
        10.2.1. Retract the boom until at least one tire on each corner of the truck is making contact with the ground
        10.2.2. Use the formula below to determine the allowable ***% of Rated Capacity*** for the ZONE in question:

11. Note: The "***Max Stable Reach in inches"*** is measured from the ***center of rotation*** of the crane housing to the ***lifting load hook.***

$$\textbf{\% Rated Capacity} = \frac{\textbf{"Max Stable Reach in inches"}}{\textbf{360}} \textbf{ X 100}$$

12. Record the ***% of Rated Capacity*** in the appropriate blank (region) on the Crane Stability page (ref. 20907) and decal.

13. Repeat Steps 7 through 12 for each ZONE on the stability page.

CRANE STABILITY

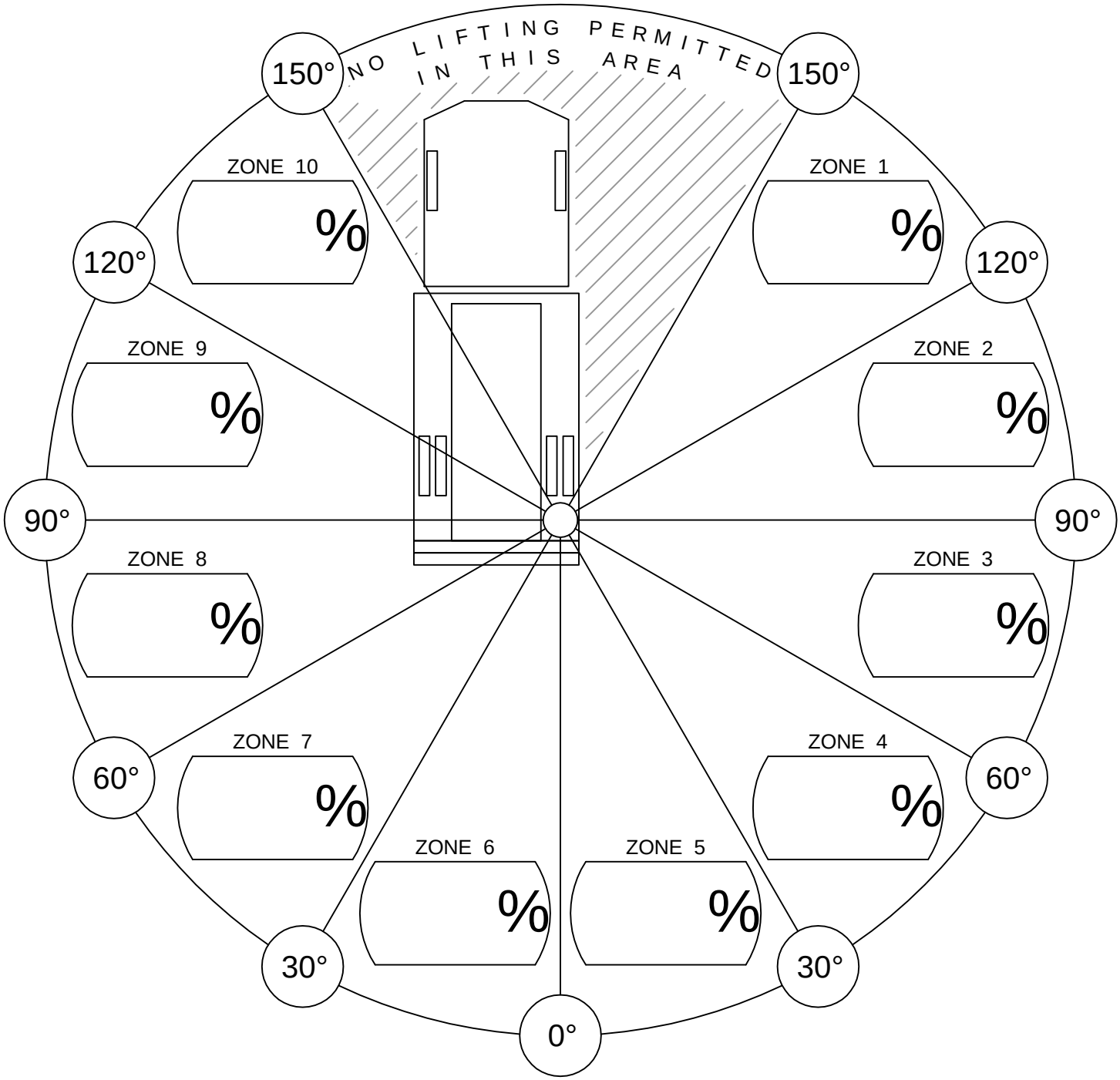

% of Rated Capacity for each of the 10 regions are provided above.

CONDITIONS:

- STABILIZERS FULLY EXTENDED & DOWN, ON FIRM LEVEL GROUND.

VENTURO® VENCO VENTURO INDUSTRIES LLC CINCINNATI, OHIO	TITLE STABILITY CHART	DATE 05-11-17F	SECTION C200
	VENTURO CRANES	SUPERSEDES 02-21-14E	20907

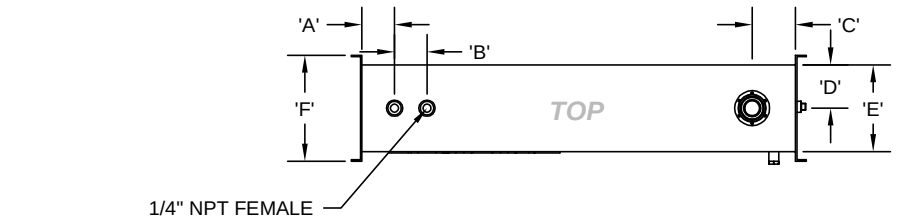

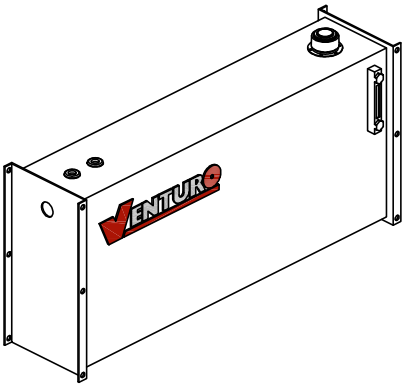

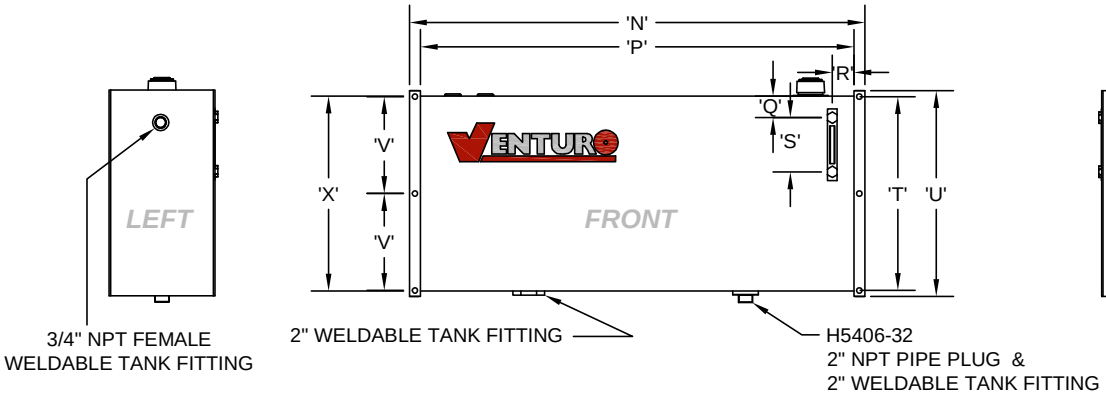

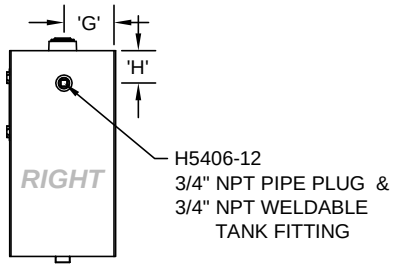

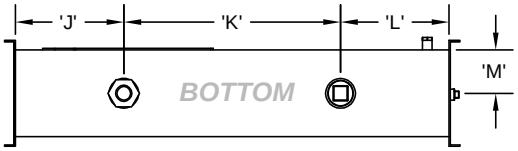

ILLUSTRATIONS FOR REFERENCE ONLY!
- COMPONENT LOCATIONS MAY DIFFER -

HYD. TANK DIMENSION (HTD) CHART		
DIMENSION / PART NO.	22786 (25 GAL.)	22999 (40 GAL.)
'A'	3"	3"
'B'	3"	3"
'C'	4"	4"
'D'	4"	5.5"
'E'	8"	11"
'J'	5"	6"
'K'	30"	30"
'L'	5"	6"
'M'	4"	5.5"
'P'	40"	42"
'Q'	2"	2"
'R'	2"	2"
'S'	5"	5"
'X'	18"	20"

MEASUREMENTS EXCLUDE MOUNTING APARATUSES

MOUNTING DIMENSION (*TMD*) CHART		
DIMENSION / PART NO.	22786 (25 GAL.)	22999 (40 GAL.)
'F'	9.75"	12"
'G'	4.875"	6"
'H'	3"	3"
'N'	42"	44"
'T'	17.875"	19.875"
'U'	19"	21"
'V'	8.938"	9.938"

MEASUREMENTS INCLUDE MOUNTING APARATUSES

VENTURO®
VENCO VENTURO INDUSTRIES LLC
CINCINNATI, OHIO

TITLE	DATE	SECTION
RESERVOIR DIMENSIONS	02-21-14E	C200
HYD. TANKS (25/40 GAL.)	SUPERSEDES 06-04-13D	22825

HYDRAULIC CIRCUIT CONNECTION GUIDE - SINGLE PUMP (NO COMPRESSOR)
(REFER TO SECTION 200 FOR MORE INFORMATION, INCLUDING HOSE SPECIFICATIONS)

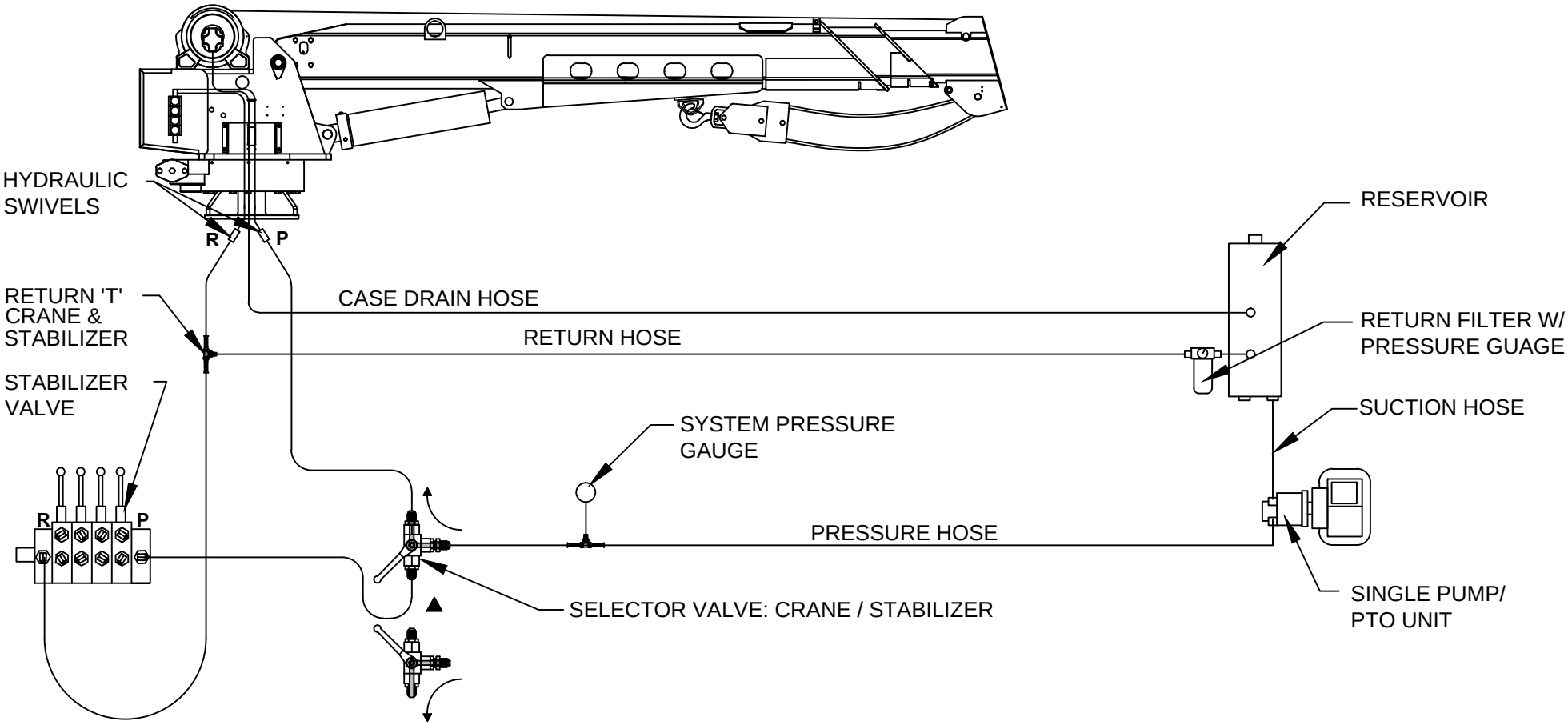

⚠ CAUTION

- SELECTOR VALVE MUST BE 'NON-CLOSED CENTER TRANSITION' TYPE.

⚠ CAUTION

- THE CASE DRAIN LINE FROM THE WINCH MUST HAVE AN UNRESTRICTED PATH TO TANK/ RESERVOIR.

HYDRAULIC CIRCUIT CONNECTION GUIDE - SINGLE PUMP W/ COMPRESSOR

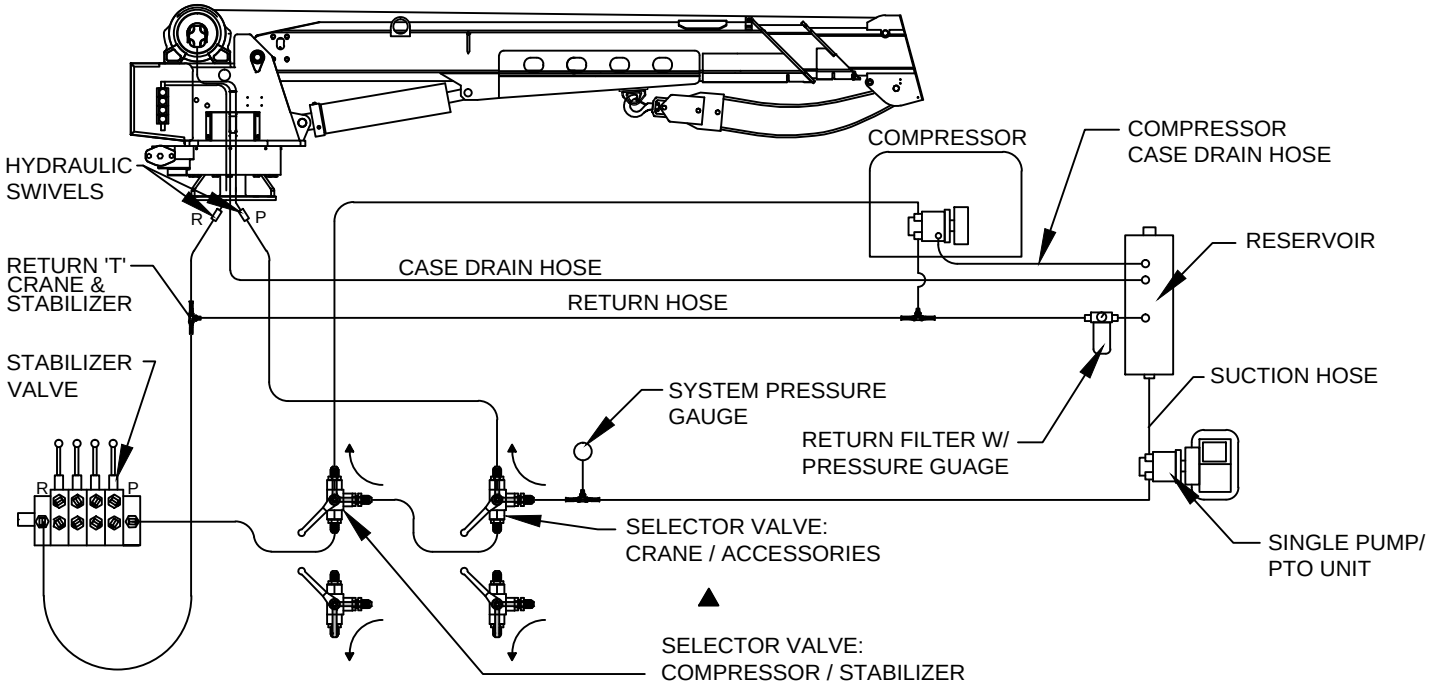

HYDRAULIC CIRCUIT CONNECTION GUIDE - TWO-STAGE PUMP W/ COMPRESSOR

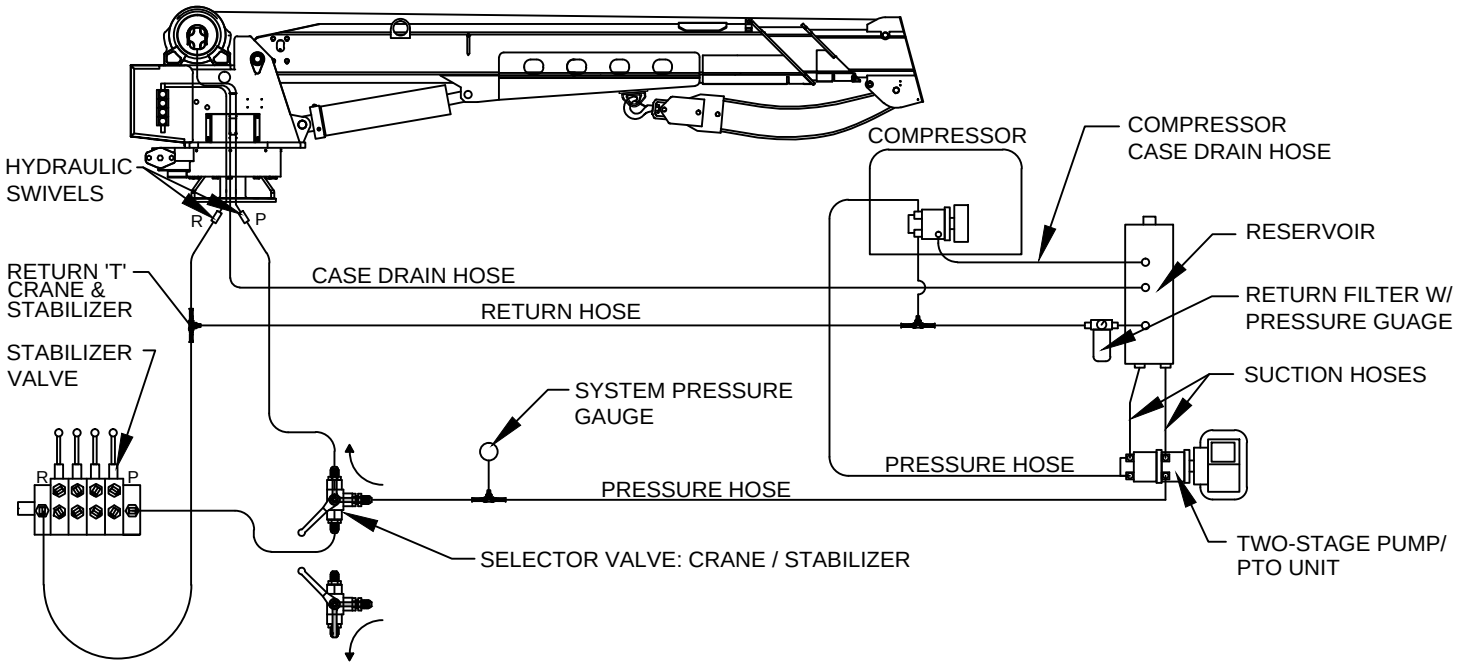

CAUTION

- SELECTOR VALVE MUST BE 'NON-CLOSED CENTER TRANSITION' TYPE.

REFER TO SECTION 200 FOR MORE INFORMATION, INCLUDING HOSE SPECIFICATIONS

CAUTION

- THE CASE DRAIN LINE FROM THE WINCH MUST HAVE AN UNRESTRICTED PATH TO TANK/ RESERVOIR.

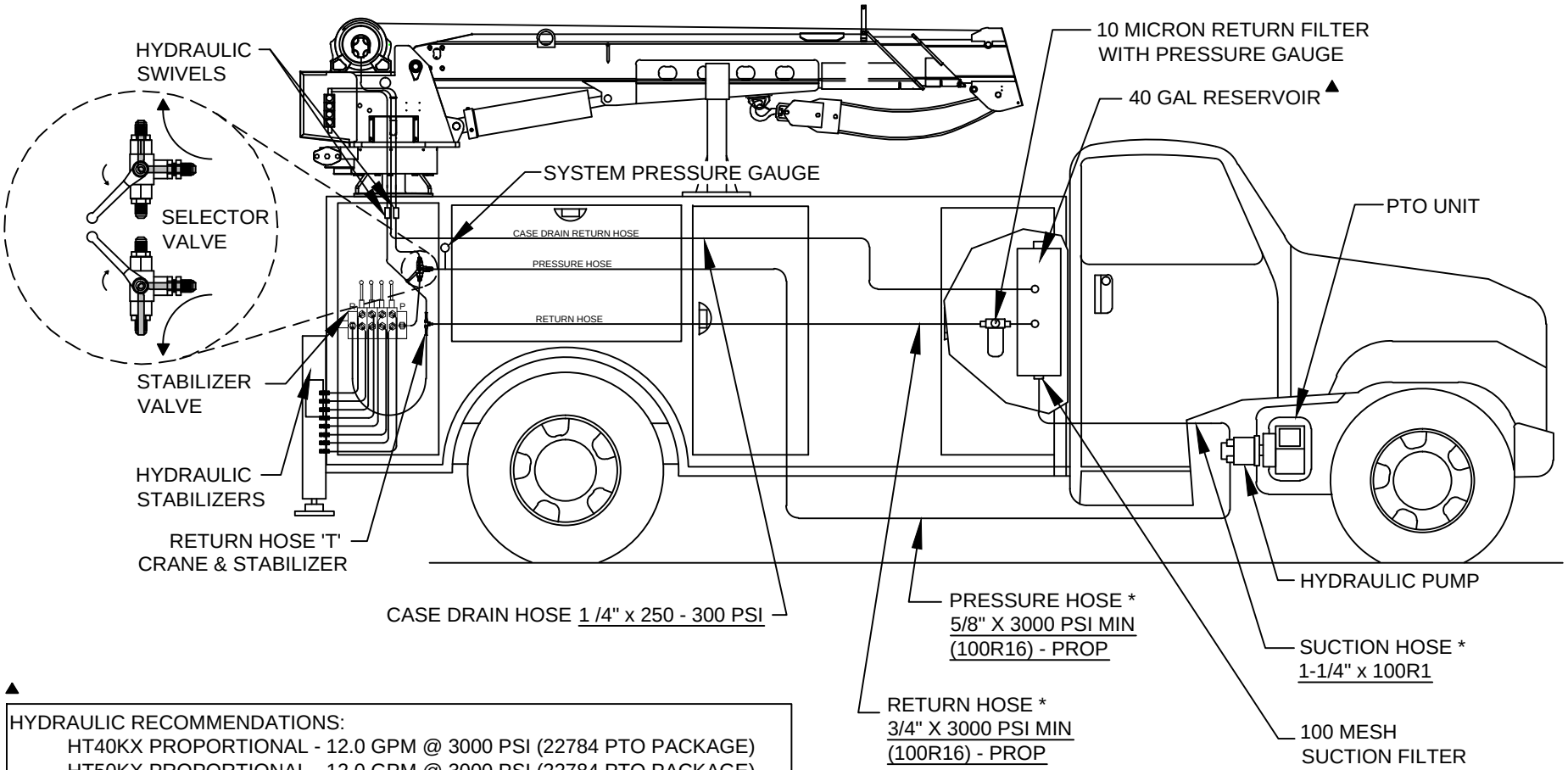

▲

HYDRAULIC RECOMMENDATIONS:

- HT40KX PROPORTIONAL - 12.0 GPM @ 3000 PSI (22784 PTO PACKAGE)
- HT50KX PROPORTIONAL - 12.0 GPM @ 3000 PSI (22784 PTO PACKAGE)
- HT45KX - 12.0 GPM @ 3000 PSI (22998 PTO PACKAGE)
- HT55KX - 12.0 GPM @ 3000 PSI (22998 PTO PACKAGE)
- HT60KX - 12.0 GPM @ 3000 PSI (22998 PTO PACKAGE)
- HT66KX - 12.0 GPM @ 3000 PSI (22998 PTO PACKAGE)

⚠ CAUTION

- SELECTOR VALVE MUST BE 'NON-CLOSED CENTER TRANSITION' TYPE.

REFER TO SECTION 200 FOR MORE INFORMATION ON INSTALLING HYDRAULIC COMPONENTS.

* HOSES AND FITTINGS BETWEEN PUMP, RESERVOIR, AND CRANE *NOT INCLUDED*.

⚠ CAUTION

- THE CASE DRAIN LINE FROM THE WINCH MUST HAVE AN UNRESTRICTED PATH TO TANK/ RESERVOIR.

RECOMMENDED SUPPLY & RETURN HOSE CONNECTIONS
CRANE & STABILIZERS

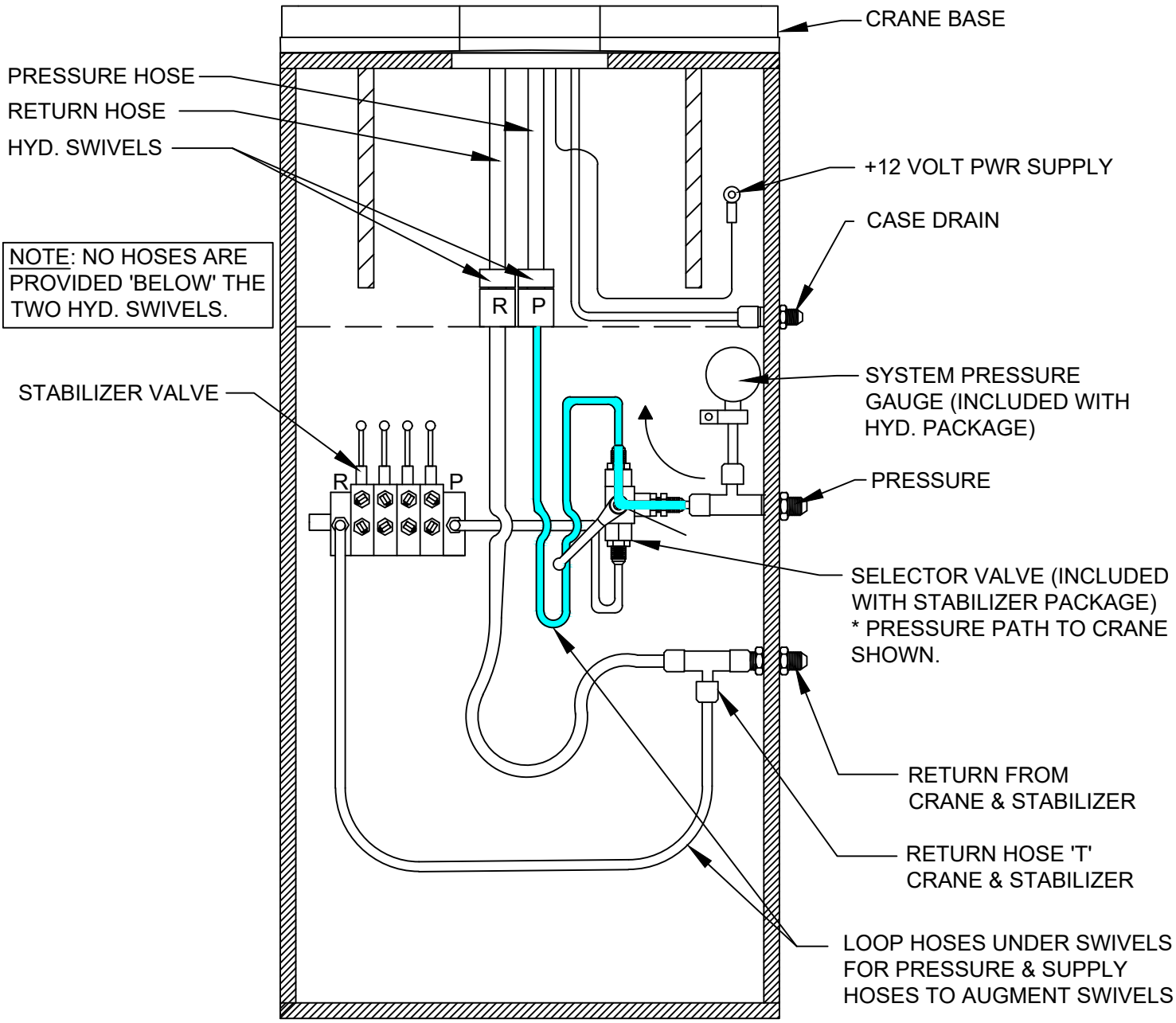

⚠ CAUTION

- SELECTOR VALVE MUST BE 'NON-CLOSED CENTER TRANSITION' TYPE VALVE.

⚠ CAUTION

- CASE DRAIN MUST RETURN DIRECTLY TO RESERVOIR WITHOUT RESTRICTION.

WIRE ROPE INSTALLATION

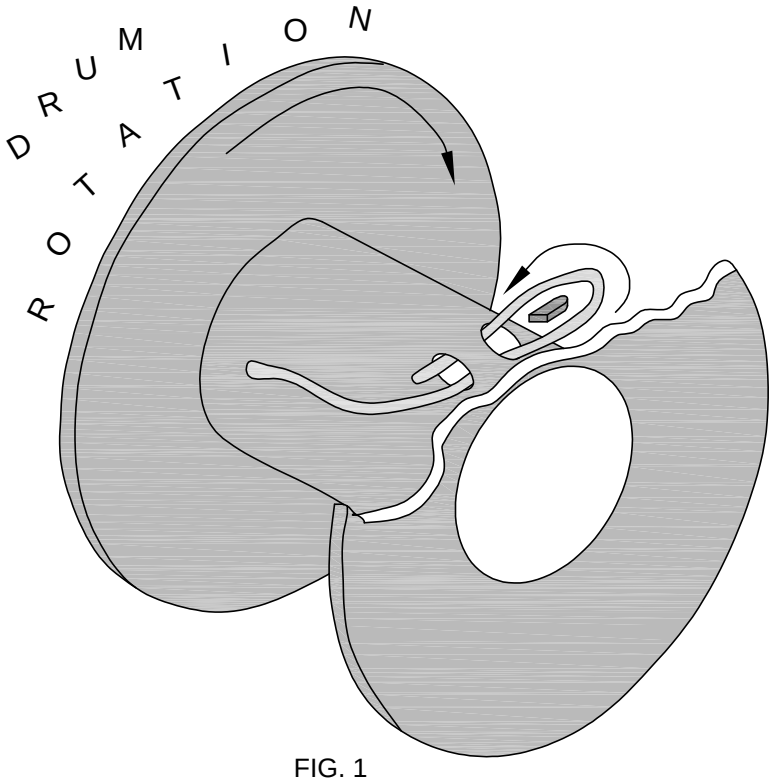

FIG. 1

STEP 1: UNWIND COIL OF WIRE ROPE BY 'ROLLING' ALONG THE FLOOR. THIS WILL PREVENT 'KINKING'.

STEP 2: INSERT WIRE ROPE END UP THROUGH ANTI-2-BLOCK (A2B) CAGE ASSEMBLY, BETWEEN CHEEK PLATES, OVER THE TOP SHEAVE, AND THROUGH WIRE ROPE GUIDE.

STEP 3: INSERT WIRE ROPE END INTO POCKET OPENING ON WINCH, WRAP AROUND WEDGE, AND BACK THROUGH POCKET OPENING AS SHOWN IN FIGURE 1.

⚠ CAUTION

- IF THE WIRE ROPE IS NOT INSTALLED FOR THE CORRECT DRUM ROTATION, THE WINCH BRAKE VALVE WILL NOT HOLD THE LOAD.

⚠ CAUTION

- THERE MUST ALWAYS BE AT LEAST [5] DEAD WRAPS OF WIRE ROPE ON THE WINCH DRUM WHILE UNDER LOAD.

NOTE: SOME WINCHES MAY BE SUPPLIED WITH A HEX NUT IN LIEU OF A WEDGE FOR INSTALLING THE WIRE ROPE.

SECTION 300

OPERATION

&

MAINTENANCE

VENCO VENTURO INDUSTRIES LLC
CINCINNATI, OHIO

MAINTENANCE OVERVIEW INFORMATION

MAINTENANCE

The crane requires only periodic lubrication. As a standard procedure, this can be done at the time the vehicle is serviced.

GENERAL

Inspect wire rope for any evidence of kinks or fraying. Ensure that lifting hook of wire rope shows no evidence of damage and is functioning normally.

Inspect headache ball ("load block") for any signs of damage or excessive wear.

Service all grease fitting locations.

Inspect hydraulic hoses and hydraulic fittings for hydraulic leaks.

Inspect electrical connections for any looseness or corrosion.

Inspect bolts and verify all are tight, paying particular attention to winch, rotation system, and mounting base bolts.

Inspect all pins and snap rings for proper fit and function.

Inspect sheaves for excessive wear or play.

Perform a basic inspection of the winch with each use, monitoring for unusual noise or hydraulic leaks.

CRANE OPERATION AND MAINTENANCE INSTRUCTIONS ▲

SAFETY

Before operating this crane, read and understand these instructions, the 920612 Crane Safety and Hazards Information Sheet, and review all safety & instruction labels on the crane.

CRANE INSPECTION

Before operating this crane, inspect for wear, damage, or oil leakage. After the wire rope has been run out, check for wear, kinks, and broken strands. Check the hook and safety latch for damage. Correct any problems before using the crane.

See Crane Safety Manual for proper inspection schedules and reports .

CAPACITY

Before operating this crane, review the capacity charts on the sides of the boom to relate the load to be lifted to the boom length and angle. The boom angle is shown by a gravity arrow.

LOAD BLOCK ▲

If the load exceeds the single-line rated load or if reduced winching speed for better control of smaller loads is required, use the load block to rig the crane for two part line operation.

CONTROLS ▲

The control pendant should be stored in a compartment or the cab when the crane is not in use.

Before activating the control pendant, inspect the cord(s) and pendant head/switches for damage. With the pendant OFF and the PTO disengaged, actuate all switches in both directions to verify that they all have the same feel/sound and return to the center position.

PTO SYSTEM ▲

Check the hydraulic fluid level in the PTO system reservoir. Engage PTO and set the engine speed to provide the desired hydraulic flow rate per the PTO system instructions.

CRANE OPERATION

Use "Winch Down" to release tension on the wire rope to unhook it from the storage tie down position.

Use "Boom Up" to elevate the boom from the boom rest position.

Avoid repeated rapid reversals of the control switches. This can cause the load to swing.

Check all control functions to see that they are working as described in the following section.

CONTROL FUNCTIONS

EMERGENCY STOP - Push to stop crane. Removes pendant voltage supply.

POWER - Supplies voltage to pendant.

HORN - Activates audible alert.

WINCH "UP" and "DOWN" - Raises and lowers the load with the winch.

BOOM "UP" and "DOWN" - Increases and decreases the boom elevation angle.

BOOM "OUT" and "IN" - Extends and retracts the boom.

ROTATION "L" and "R" - Rotates the crane left and right.

TRIGGER (Proportional Systems Only) - Varies the flow rate delivered to the crane valve. The farther the trigger is pulled, the faster the selected crane function operates.

OVERLOAD SENSING SYSTEM

This crane is equipped with an Overload Sensing System. If the capacity of the crane is exceeded, the "Winch Up", "Boom Down", and "Boom Out" functions will be shut down. The "Winch Down", "Boom Up", and "Boom In" functions will continue to operate and can be used to relieve the overload condition. The "Rotation" function also will continue to operate.

TWO-BLOCK SENSING SYSTEM

This crane is equipped with an anti two-block device that is mounted at the tip of the boom. If the load block / overhaul weight contacts the device, the "Winch Up", "Boom Down", and "Boom Out" functions are disabled. The "Winch Down", "Boom Up", and "Boom In" functions will continue to operate and can be used to relieve the two-block condition.

TRUCK SETUP & STABILIZERS

1. The truck should be parked on firm level ground.
2. The center of the crane should be positioned close enough to the job so that it can be operated at a reach that puts the load within the rated capacity of the crane.
3. Set the vehicle parking brake and put the vehicle transmission in "park" if it is an automatic.
4. Fully deploy stabilizers to help stabilize vehicle against rocking or overturning.
5. Use stabilizers to level vehicle only. Tires must maintain contact with ground.

PREPARATION FOR TRAVEL

1. Return the stabilizers to the stowed position. Install and secure all pins.
2. Stow the crane boom in the boom support.
3. Hook the winch line to a tie down point on the body or pedestal and apply tension.
4. Disengage the PTO pump and idle speed control.
5. Power down the control pendant and store in a body compartment or the cab.
6. Turn OFF power to crane. ▲

MAINTENANCE

The crane requires only periodic lubrication. As a standard procedure, this can be done at the time the vehicle is serviced.

The winch planetary gearbox lube should be maintained at the level plug.

To ensure optimal winch performance, the following lube schedule and lube specifications should be followed:

Initial Change - after 6 months or 100 hours of operation (whichever comes first).
Periodic Change - every 24 months or 300 hours of operation (whichever comes first).

HLP 46 or HLP 68 hydraulic oil

Service grease fittings and rotation gear with molybdenum-disulfide graphite-filled lithium-based extreme pressure grease.

Grease fitting locations:
Boom pivot at rear of boom
Slew drive (2 or 3 zerk fittings depending on component supplier)
Swing bearing race (2 zerk fittings)
Elevation cylinder base and rod pivots

Remove rear cover and check all hydraulic tube and hose fittings for tightness.

Check electrical connections for looseness and corrosion.

EXPLANATION OF HYDRAULIC VALVE SYSTEMS

OVERVIEW

Venturo's hydraulic cranes are available in two [2] general configurations: Proportional and Non-Proportional. The **Non-Proportional** configuration utilizes a safety shut-off valve which, when ***not*** actuated, allows hydraulic fluid to bypass the valve bank and return to tank; the crane will not function when the safety shut-off valve is not actuated. When the safety shut-off valve is actuated (control pendant energizes the coil or the coil is manually overridden), hydraulic fluid cycles through the valve bank and allows the crane to function. The **Proportional** configuration utilizes a proportional valve which, in its fully closed and fully opened positions, functions similarly to the safety shut-off valve, but adds the ability to operate the crane at any speed in between these two extremes.

In both the Non-Proportional and Proportional configurations, the four [4] crane functions (winch, rotation, boom elevation, and boom extension) are controlled by four [4] separate valve sections. Each valve section has two [2] solenoid coils (and two [2] manual overrides) which control the direction that the function operates (e.g. winch up vs. winch down). For a given crane function and direction (e.g. winch up), the solenoid coil and the associated manual override lie on the same side of the valve bank (both 'push').

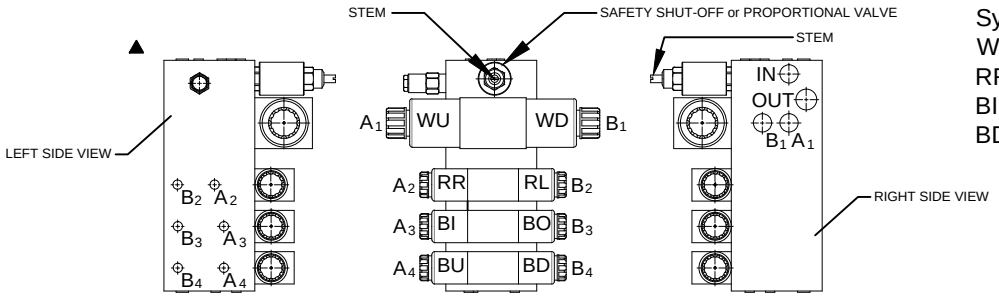

System abbreviations:

WD	- Winch Down	WU	- Winch Up
RR	- Rotation Right	RL	- Rotation Left
BI	- Boom In	BO	- Boom Out
BD	- Boom Down	BU	- Boom Up

MANUAL OVERRIDE SYSTEM

Should an electrical failure occur, your Venturo crane can be operated manually. ***The manual overrides are intended for emergency use only and should not be used for normal operation***.

To operate in manual override mode:

(1) Override the safety shut-off or proportional valve by turning the red stem on the valve as stated below:

Non-Proportional system

For override operation, press stem in and rotate counter-clockwise until it stops.
To return to normal operation, press stem in and rotate clockwise until it stops.

Proportional system

For override operation, rotate stem clockwise (the farther the stem turns, the faster the crane operates).
To return to normal operation, roate stem counter-clockwise until it stops.

(2) Determine the coil / override associated with the function you wish to operate, then insert a small diameter object (an Allen wrench works well) into the detent on the end of the valve stem and press firmly. For example, pushing the stem labeled 'A1' on the first bank (see illustration above) will actuate Winch Up.

W A R N I N G

- For normal crane operation, the safety shut-off or proportional valve ***MUST*** be in the 'normal' position (as described above). Test the crane before each use by placing the power toggle switch or trigger in the 'OFF' position and testing each crane function *using the manual overrides*. If any crane function operates, verify that the red stem on the safety shut-off or proportional valve is in the normal position, then retest.

WIRE ROPE ASSEMBLY

WIRE ROPE:

3/8" DIA, 100' OR 125' LONG

GAC 7X19 XIP-RHRL-IWRC, SB 14,400 LBS

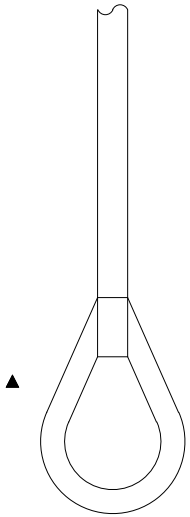

TERMINATES IN THIMBLE

NO HOOK

LOAD BLOCK ASSEMBLY

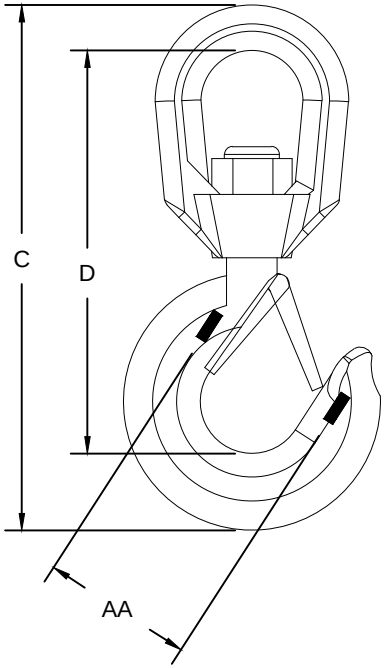

LOAD BLOCK SWIVEL HOOK:

RATING: 5 TONNE (11,023 LBS)

DIMENSIONS:

COLOR	BRAND	AA	C	D
GOLD	CROSBY	2.50"	9.69"	7.50"

SINGLE LINE

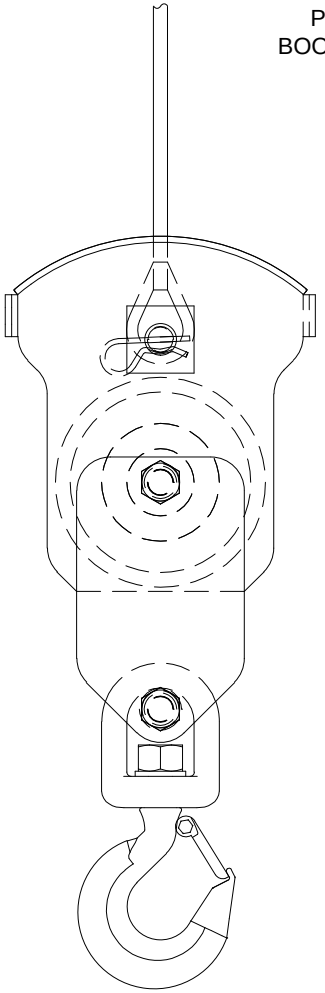

TWO-PART LINE

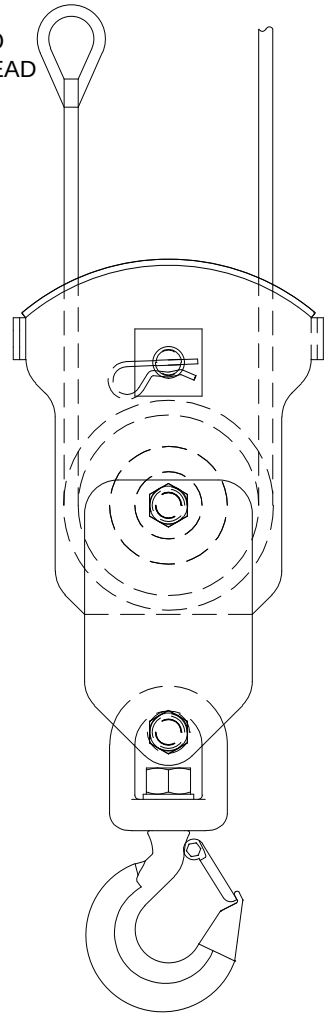

VENTURO®

VENCO VENTURO INDUSTRIES LLC
CINCINNATI, OHIO

TITLE	DATE	SECTION
WIRE ROPE, HOOK, & LOAD BLOCK INFORMATION	05-12-25F	C300
HT40/45/50KX	SUPERSEDES 08-15-24E	23231

SECTION 400

REPLACEMENT PARTS

VENCO VENTURO INDUSTRIES LLC
CINCINNATI, OHIO

7607400A

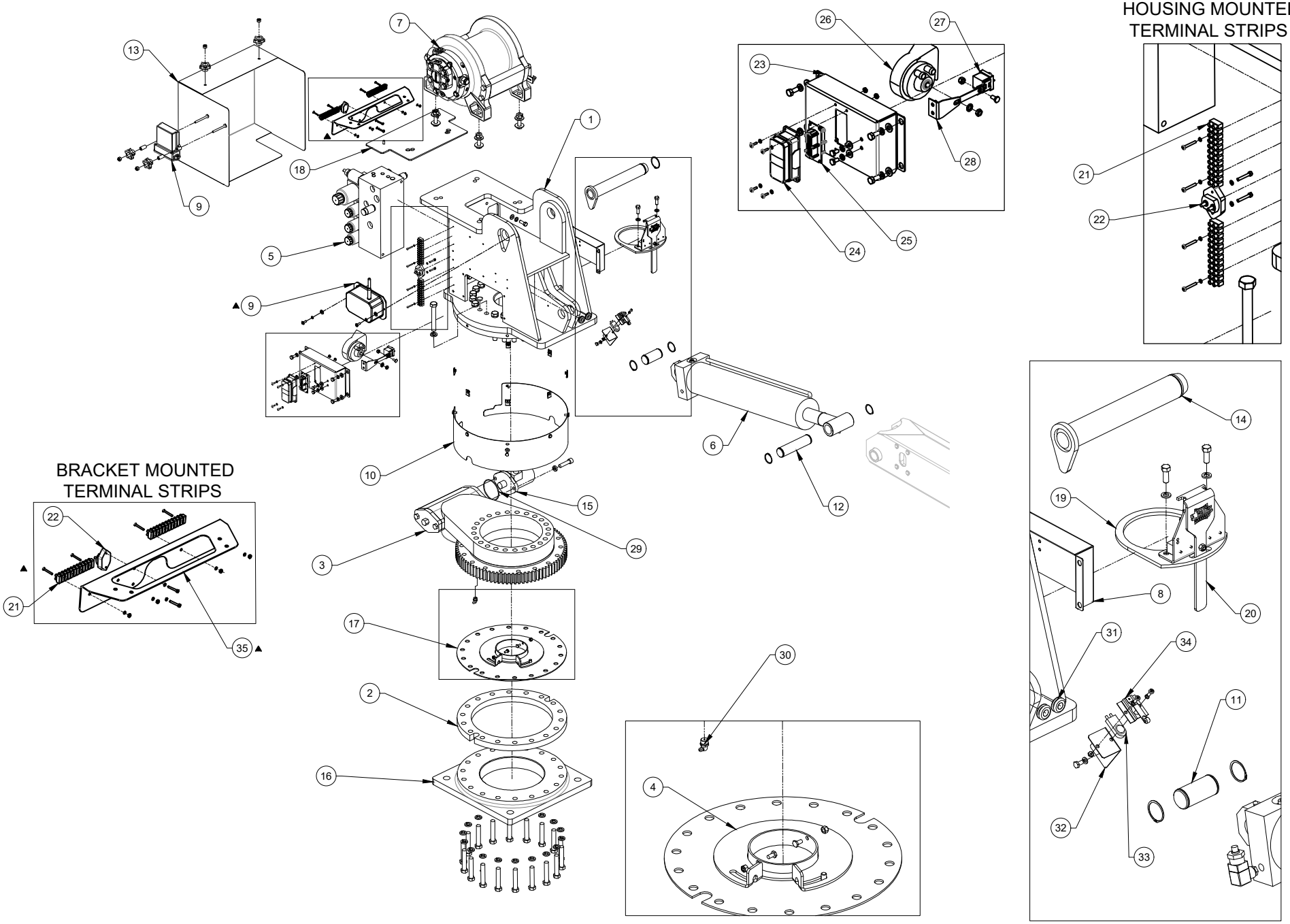

REFERENCE 26891 OR 26881 FOR REPLACEMENT PARTS LIST

VENTURO®

VENCO VENTURO LLC
CINCINNATI, OHIO

TITLE	DATE	SECTION
REPLACEMENT PARTS DRAWING	09-28-26A	C400
HT40/50 SERIES MECHANISM	SUPERSEDES 05-25-23	26890

REPLACEMENT PARTS LIST - HT50 SERIES; MECHANISM

	ITEM	QTY. P	QTY. NP	PART NUMBER	DESCRIPTION
	1	1	1	26583	WELDED ASSEMBLY; HOUSING, MECHANISM
	2	1	1	23662	SPACER PLATE
	3	1	1	22704	SLEWING RING
	4	1	1	23666	STOP DISK
	5	1	-	22736H-3	HYDRAULIC VALVE MANIFOLD, PROP
	5	-	1	22501-0-225-225	HYDRAULIC VALVE MANIFOLD, NON PROP
	6	1	1	21748	ELEVATION CYLINDER
	7	1	-	22830	HYDRAULIC WINCH, PROP
	7	-	1	22909	HYDRAULIC WINCH, NON PROP
	8	1	1	22715-1	HOUSING SIDE COVER
▲	9	-	1	21986-HT	RADIO REMOTE SYSTEM (OPT) NON-PROP, BASE
▲	9	-	1	24470-HT	RADIO REMOTE SYSTEM (OPT) NON-PROP KARTECH
▲	9	1	-	21983	RADIO REMOTE SYSTEM (OPT) PROP, BASE
▲	9	1	-	24472	RADIO REMOTE SYSTEM (OPT) PROP, KARTECH
	10	1	1	23644	SLEWING RING COVER
	11	1	1	22256	ELEVATION CYLINDER PIN - INBOARD
	12	1	1	22257	ELEVATION CYLINDER PIN - OUTBOARD
	13	1	1	22842	REAR COVER
	14	1	1	22721	PIVOT PIN - MAIN BOOM PIVOT
	15	1	1	27276	HYDRAULIC ROTATION MOTOR
	16	1	1	26606	MACHINED BASE
	17	1	1	23626	SLIPPER PLATE WELD

ITEM	QTY. P	QTY. NP	PART NUMBER	DESCRIPTION	
21	1	1	19187-12	TERMINAL STRIP; 12 SECTIONS	
22	1	1	15683-20A	CIRCUIT BREAKER; 20A	
23	1	1	22715-2	HOUSING SIDE COVER	
24	1	1	22481	SOCKET CASE W/ HOOD; 16-PIN	
25	1	1	22482	SOCKET; 16-PIN FEMALE INSERT	
26	1	1	21948	HORN	
27	1	1	22739	HIGH CAPACITY RELAY	
28	1	1	22000	BRACKET; HORN	
29	1	1	OR-152-5	O-RING; ROTATION MOTOR	
30	1	1	!ZERK-013-27 NPT-90	FITTING; GREASE, 90°	
31	2	2	26586	GROMMET - RUBBER	
32	1	1	20497	BRACKET; SWITCH	
33	1	1	19918	SWITCH; BOOM TOP POSITION	▲
34	1	1	19917	BRACKET; BOOM SHUT-OFF SWITCH	
35	1	1	25255	BARRIER STRIP MNTG BRACKET	

REFERENCE 26890 FOR REPLACEMENT PARTS DRAWING

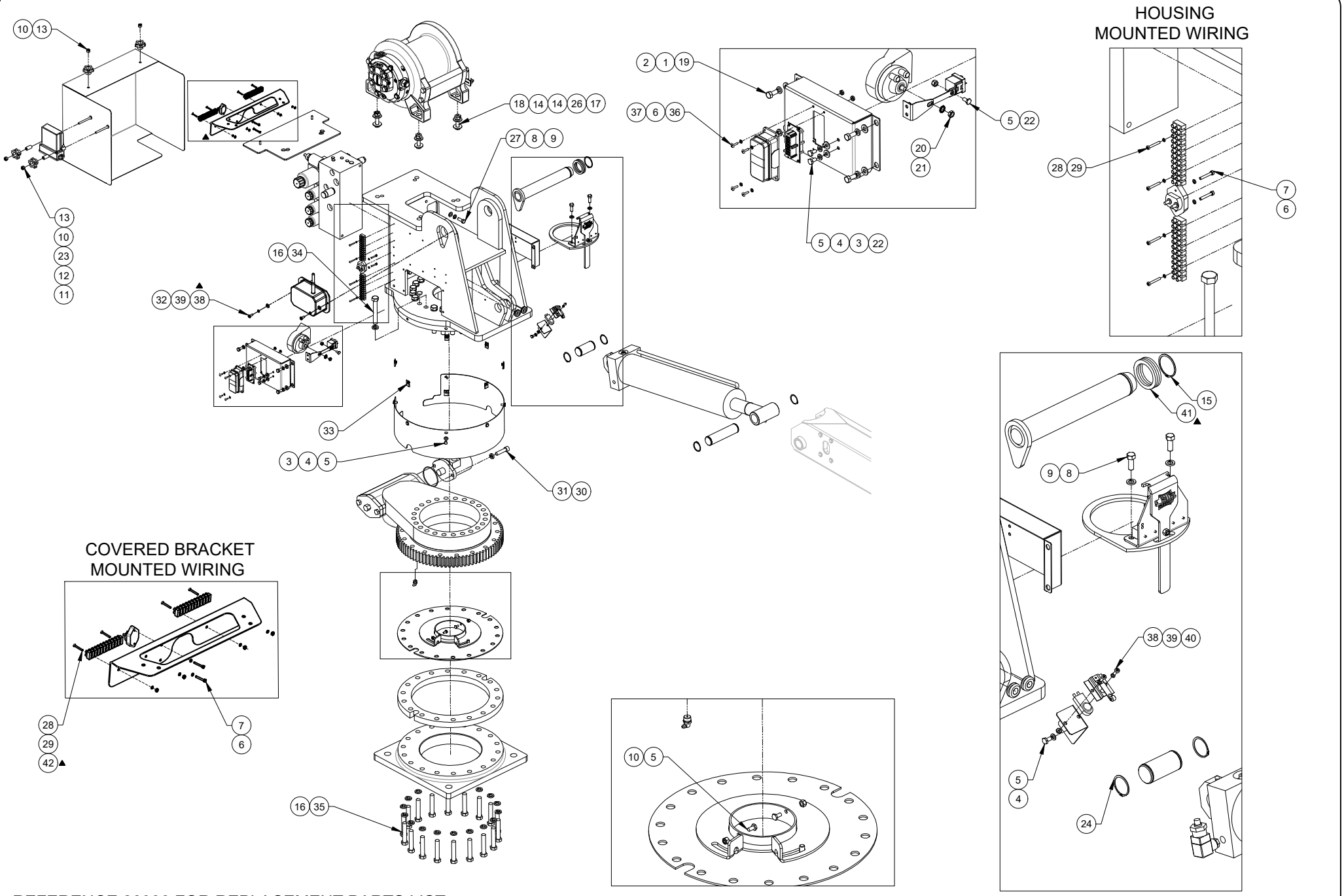

REFERENCE 26906 FOR REPLACEMENT PARTS LIST

VENTURO®	VENCO VENTURO LLC CINCINNATI, OHIO	TITLE REPLACEMENT FASTENERS DRAWING	DATE 09-28-26B	SECTION C400
		HT40/50 SERIES MECHANISM	SUPERSEDES 03-29-24A	26905

RPLCMNT FASTENERS LIST - HT40/50KX SERIES; MECHANISM

ITEM	QTY.	PART NUMBER	DESCRIPTION
1	8	!LWSH-031S	LOCK WASHER; 5/16, S/S
2	8	!FWSH-031S	FLAT WASHER; 5/16, S/S
3	13	!FWSH-025S	FLAT WASHER; 1/4, S/S
4	12	!LWSH-025S	LOCK WASHER; 1/4, S/S
5	11	!HHCS02520050S	HHCS; 1/4-20 x 1/2 LG, S/S
6	6	!LWSH-#08S	LOCK WASHER; #8, S/S
7	2	!SHCS#0832100S	SHCS; #8-32 X 1, S/S
8	4	!LWSH-038	LOCK WASHER; 3/8, ZINC
9	4	!HHCS03816100	HHCS; 3/8-16 X 1, ZINC
10	4	28327	KNOB, HAND, 5-POINT
11	2	!HHCS02520275	HHCS, 1/4-20 X 2-3/4, S/S, FULL THRD
12	2	!JNUT-02520NS	JNUT, NYLON INSERT, 1/4-20, S/S
13	4	!LNUT-02520-H	LOCK NUT; 1/4-20, HVY PAT, NYLON
14	8	!FWSH-050	FLAT WASHER; 1/2, GR. 8
15	1	24842-175	SPIRAL RETAINING RING; 1-3/"4, S/S
16	40	!LWSH-063	LOCK WASHER; 5/8, GR. 5, ZINC
17	4	!HNUT-05013-8	HEX NUT; 1/2-13, GR. 8
18	2	!HHCS05013225-8	HHCS; 1/2-13 X 2-1/4 LG, GR 8
19	8	!HHCS03118075S	HHCS; 5/16-18 X 3/4, S/S
20	1	!LWSH-031-STAR	LOCK WASHER; 5/16, ZINC
21	1	!HNUT-03118	HEX NUT; 5/16-18, ZINC

ITEM	QTY.	PART NUMBER	DESCRIPTION	
22	5	!LNUT-02520SS	NYLOCK HEX NUT 1/4-20	
23	2	28328	NYLON SPACER, BLK - .25ID X .50OD X 1	
24	4	!SRNG-150	SNAP RING; 1-1/2, ZINC	
25	-	-	-	
26	4	!LWSH-050	LOCK WASHER; 1/2, GR. 8, ZINC	
27	2	!FWSH-038	FLAT WASHER; 3/8, ZINC	
28	4	!LWSH-#06S	LOCK WASHER; #06, S/S	
29	4	!PHPMS#0632100S	PHILIPS-HD PMS; #6-32 X 1, S/S	
30	2	!LWSH-050-HC	LOCK WASHER; 1/2, HI-COLLAR	
31	2	!SHCS05013200	SOCKET HEAD CAP SCREW - 1/2-13 X 2	
32	2	!FWSH-#10S	FLAT WASHER; #10, S/S	▲
33	5	!UNUT-02520-LKG	U-NUT 1/4-20, LOCKING TYPE	
34	20	!HHCS06311450	HHCS; 5/8-11 x 4-1/2, GR. 5, ZINC	
35	20	!HHCS06311350	HHCS; 5/8-11 x 3-1/2, GR. 8, ZINC	
36	4	!SHPMS#0832050S	SLOT-HD PMS; #8-32 x 1/2, S/S	
37	4	!HNUT-#0832S	HEX NUT; #08-32, S/S	
38	4	!PHPMS#1024050S	PHILIPS-HD PMS; #10-24 x 1/2, S/S	▲
39	4	!LWSH-#10S	LOCK WASHER; #10, S/S	▲
40	2	!HNUT-#1024S	HEX NUT; #10-24, S/S	
41	2	26609	SHIM - STAINLESS STEEL	
42	4	!HNUT-#06-32S	HEX NUT; #06-32, S/S	▲

HHCS = HEX HEAD CAP SCREW, SHCS = SOCKET HEAD CAP SCREW, PMS = PAN MACHINE SCREW, S/S = STAINLESS STEEL

REFERENCE 26905 FOR REPLACEMENT PARTS DRAWING

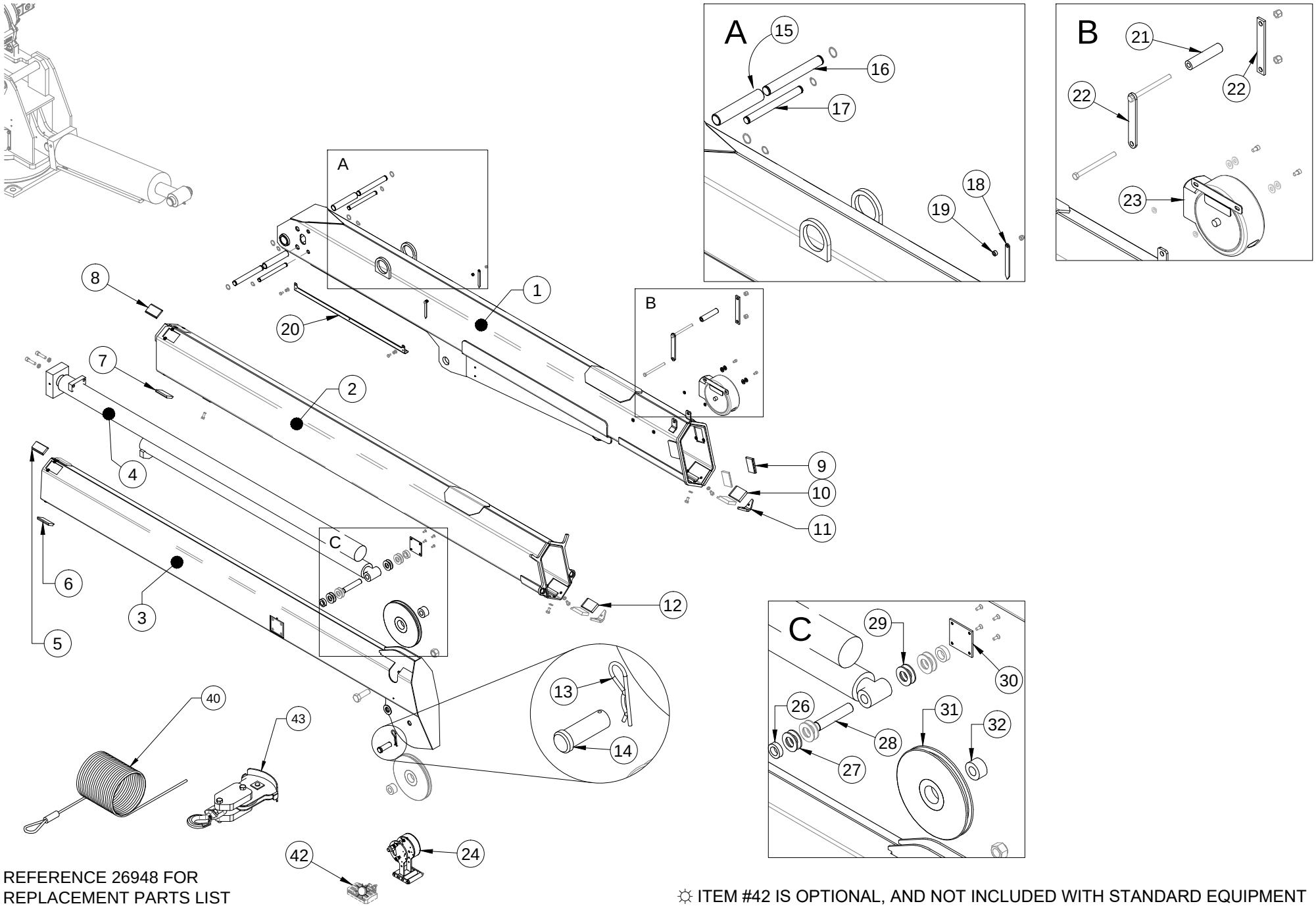

REFERENCE 26948 FOR
REPLACEMENT PARTS LIST

☼ ITEM #42 IS OPTIONAL, AND NOT INCLUDED WITH STANDARD EQUIPMENT

VENTURO®

VENCO VENTURO INDUSTRIES LLC
CINCINNATI, OHIO

TITLE	DATE	SECTION
RPLCMNT PARTS DRAWING - 26595 BOOM	06-11-24	C400
HT40/45/50 - 20'	SUPERSEDES -	26947

26595 BOOM - REPLACEMENT PARTS LIST - HT40/45/50 - 20'

ITEM	PART NO.	QTY	DESCRIPTION
1	26596	1	WELDED ASS'Y; PRIMARY BOOM
2	27209	1	WELDED ASS'Y; SECONDARY BOOM
3	21416	1	WELDED ASS'Y; TERTIARY BOOM
4	21744	1	EXTENSION CYLINDER
5	23217-1	2	BOOM PAD; UHMW, 'A', 3.19 x 1.88 x 0.44
6	23217-1	2	BOOM PAD; UHMW, 'A', 3.19 x 1.88 x 0.44
7	23217-2	2	BOOM PAD; UHMW, 'A', 3.19 x 2.13 x 0.44
8	23217-2	2	BOOM PAD; UHMW, 'A', 3.19 x 2.13 x 0.44
9	23217-13	2	BOOM PAD; UHMW, 'A', 3.19 x 2.13 x 0.38
10	23217-17	2	BOOM PAD; UHMW, 'B', 3.19 x 2.50 x 0.50
11	23183	2	V-BLOCK, SLIDER
12	23217-14	2	BOOM PAD; UHMW, 'B', 3.19 x 2.13 x 0.50
▲ 13	21-07	1	PIN; HAIRPIN COTTER
▲ 14	13401-1	1	CLEVIS PIN; 3/4 X 2" LG
15	24535	2	THRUST ROLLER; EXTENSION CYLINDER
16	22255	2	THRUST PIN; REAR, EXTENSION CYLINDER
17	22255	2	THRUST PIN; FRONT, EXTENSION CYLINDER
18	13459-2	2	ARROW
19	22490	2	SPACER; BOOM ARROW
20	26940	1	CABLE GUARD BRACKET
21	21560	1	ROLLER; UHMW, WIRE ROPE GUIDE

ITEM	PART NO.	QTY	DESCRIPTION
22	21936	2	FLAT, MOUNT; WIRE ROPE GUIDE
23	26577-1-20	1	COMPLETE CORD REEL
24	27469-L-C-11	1	ANTI-TWO-BLOCK ASSEMBLY
25	-	-	-
26	21428	2	BUSHING; EXTENSION CYLINDER
27	12534-8	2	BUSHING; MACHINE, 1" ID, 1-1/2" OD, 14G, ZINC
28	21405	1	PIN; CYLINDER
29	12534-2	2	BUSHING; MACHINE, 1" ID, 1-1/2" OD, 10G, ZINC
30	23116	2	PIN BLOCK REINFORCING
31	23928	2	CABLE SHEAVE
32	23929	2	SPACER; SHEAVE
33	-	-	-
34	-	-	-
35	-	-	-
36	-	-	-
37	-	-	-
38	-	-	-
39	-	-	-
40	17094-3/8-100	1	WIRE ROPE; 100 FT, NO HOOK
41	-	-	-
☼42	27483	1	ASS'Y; WORK LIGHT, LED
43	17949-1	1	LOAD BLOCK ASSEMBLY (HT40)
	17949-4	1	LOAD BLOCK ASSEMBLY (HT45)
	17949	1	LOAD BLOCK ASSEMBLY (HT50)

REFERENCE 26947 FOR REPLACEMENT PARTS DRAWING

☼ OPTIONAL; NOT INCLUDED WITH STANDARD EQUIPMENT

VENTURO®

VENCO VENTURO LLC
CINCINNATI, OHIO

TITLE	DATE	SECTION
REPLACEMENT PARTS LIST - 26595 BOOM	11-12-25A	C400
HT40/45/50 - 20'	SUPERSEDES 06-11-24	26948

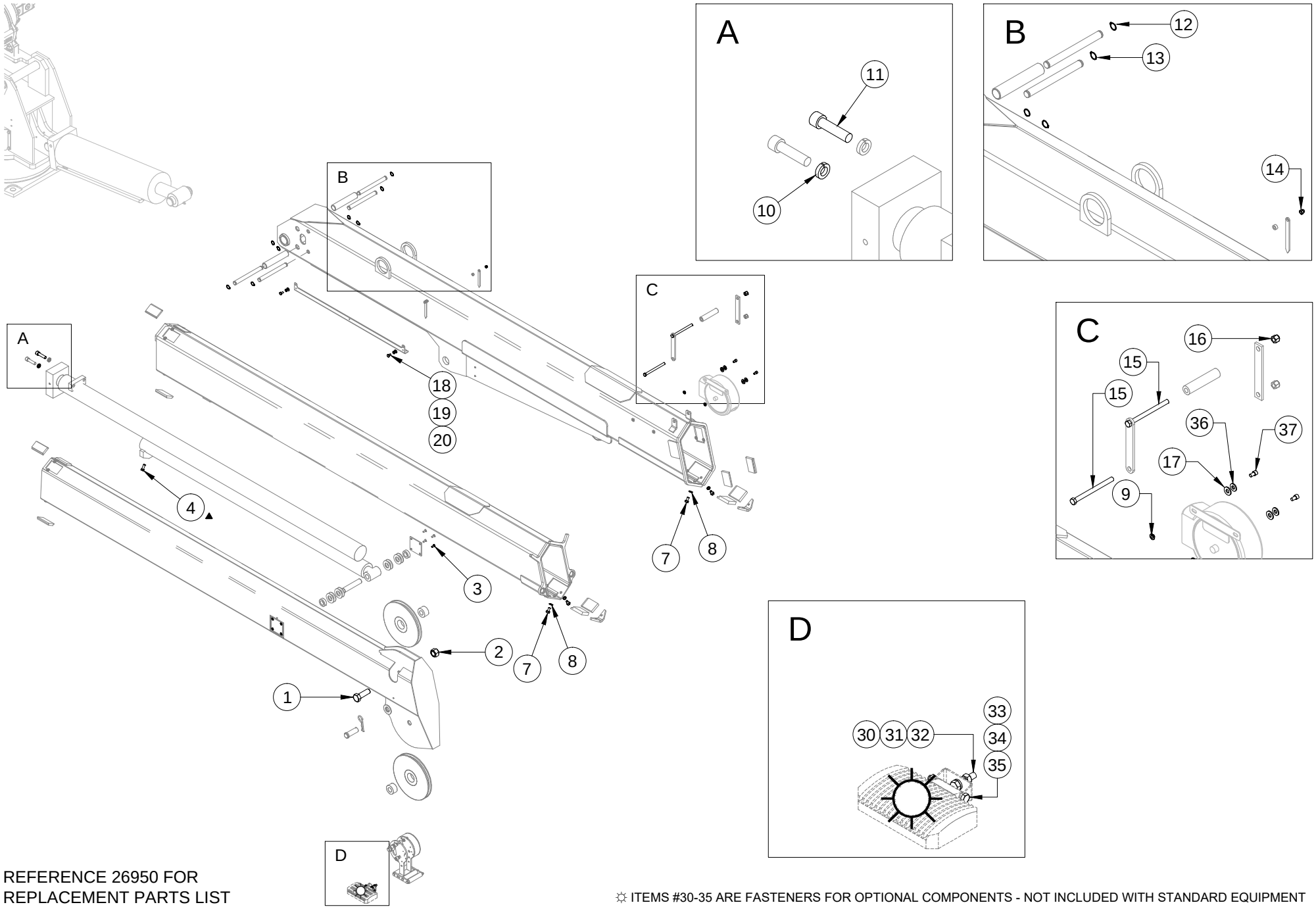

REFERENCE 26950 FOR
REPLACEMENT PARTS LIST

☼ ITEMS #30-35 ARE FASTENERS FOR OPTIONAL COMPONENTS - NOT INCLUDED WITH STANDARD EQUIPMENT

VENTURO®

VENCO VENTURO INDUSTRIES LLC
CINCINNATI, OHIO

TITLE	DATE	SECTION
REPL FASTENERS DRAWING - 26595 BOOM	11-18-24A	C400
HT40/45/50 - 20'	SUPERSEDES 06-11-24	26949

ITEM #	PART #	QTY	DESCRIPTION	WHERE-USED
1	17059-6	1	SHEAVE AXLE; HHCS 3/4-10 X 2" LG.	TOP SHEAVE
2	!JNUT-07510N	1	JAM NUT; 3/4-10, GR. 5	TOP SHEAVE
3	!CACS02520050S	8	CACS; 1/4-20 X 1/2", S/S	PIN BLCK REINFORCING
▲ 4	!HHCS03816100N	2	HHCS; NYLON PATCH 3/8-16 X 1", GR. 5 ZINC	EXT. CYL. V-BLOCK
5	-	-	-	-
6	-	-	-	-
7	!HHCS03816075S	4	HHCS; 3/8-16 X 3/4", S/S	V-BLOCKS
8	!LWSH-038	4	LOCK WASHER; 3/8", GR. 5, ZINC-PL	V-BLOCKS
9	28198	2	INSULATING SLEEVE WASHER - 5/16"	CORD REEL ASS'Y
10	!LWSH-050-HC	2	LOCK WASHER; 1/2", HI-COLLAR	EXTENSION CYLINDER
11	!SHCS05013200	2	SHCS; 1/2-13 X 2"	EXTENSION CYLINDER
12	!SRNG-075	4	SNAP RING; 3/4"	EXT. CYL. REAR PINS
13	!SRNG-075	4	SNAP RING; 3/4"	EXT. CYL. FRONT PINS
14	!ANUT-02520S	2	ACORN NUT; 1/4-20, S/S	BOOM ARROWS
15	!HHCS04414550	2	HHCS; 7/16-14 X 5-1/2", GR. 5, ZINC	WIRE ROPE GUIDE
16	!LNUT-04414	2	LOCK NUT; 7/16-14, GR. 5, ZINC	WIRE ROPE GUIDE
17	01016	2	FIBER WASHER	CORD REEL ASS'Y
18	!HHCS03118050S	2	HHCS; 5/16-11 X 1/2", S/S	CABLE GUARD BRACKET
19	!LWSH-031S	2	LOCK WASHER; 5/16", S/S	CABLE GUARD BRACKET
20	!FWSH-031S	2	FLAT WASHER; 5/16", S/S	CABLE GUARD BRACKET

ITEM #	PART #	QTY	DESCRIPTION	WHERE-USED
21	-	-	-	-
22	-	-	-	-
23	-	-	-	-
24	-	-	-	-
25	-	-	-	-
26	-	-	-	-
27	-	-	-	-
28	-	-	-	-
29	-	-	-	-
☼ 30	!HHCS03118125S	1	HHCS; 5/16-18 X 1-1/4", S/S	WORK LIGHT
☼ 31	!HNUT-03118S	2	HEX NUT; 5/16-18, S/S	WORK LIGHT
☼ 32	!FWSH-031S	1	FLAT WASHER; 5/16", S/S	WORK LIGHT
☼ 33	!HHCS02520250S	1	HHCS; 1/4-20 X 2-1/2", S/S	WORK LIGHT
☼ 34	!LWSH-025S	1	LOCK WASHER; 1/4", S/S	WORK LIGHT
☼ 35	!HNUT-02520S	1	HEX NUT; 1/4-20, S/S	WORK LIGHT
36	!FWSH-031	2	FLAT WASHER; 5/16"	CORD REEL ASS'Y
37	!SHCS03118063S	2	SHCS; 5/16-18 X 5/8" LG, S/S	CORD REEL ASS'Y
38	-	-	-	-
39	-	-	-	-
40	-	-	-	-

☼ ITEMS #30-35 ARE FOR OPTIONAL COMPONENTS - NOT INCLUDED WITH STANDARD EQUIPMENT

SH = SOCKET HEAD HH = HEX HEAD THCS = TRUSS HEAD PHILLIPS SCREW
CACS = COUNTERSUNK ALLEN HEAD CAP SCREW PMS = PAN MACHINE SCREW
S/S = STAINLESS STEEL

REFERENCE 26949 FOR REPLACEMENT FASTENERS DRAWING

VENTURO®

VENCO VENTURO INDUSTRIES LLC
CINCINNATI, OHIO

TITLE	DATE	SECTION
REPLCMNT FASTENERS LIST - 26595 BOOM	11-18-24A	C400
HT40/45/50/60 - 20'	SUPERSEDES 06-11-24	26950

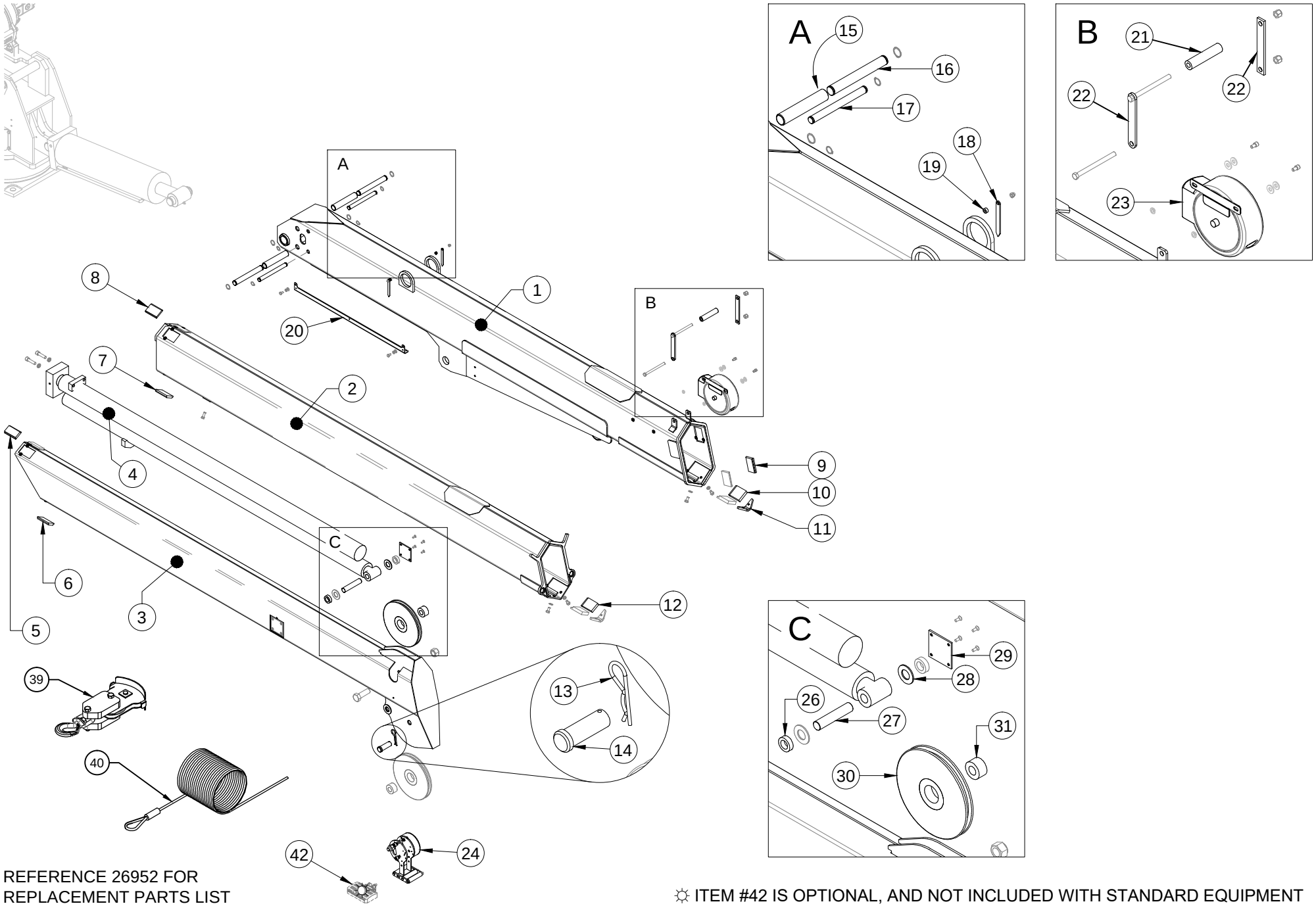

REFERENCE 26952 FOR
REPLACEMENT PARTS LIST

☼ ITEM #42 IS OPTIONAL, AND NOT INCLUDED WITH STANDARD EQUIPMENT

VENTURO®

VENCO VENTURO INDUSTRIES LLC
CINCINNATI, OHIO

TITLE	DATE	SECTION
RPLCMNT PARTS DRAWING - 26593 BOOM	08-28-24A	C400
HT40/45/50/60 - 25'	SUPERSEDES 06-11-24	26951

REPLACEMENT PARTS LIST - 26593 BOOM

ITEM	PART NO.	QTY	DESCRIPTION
1	26594	1	WELDED ASS'Y; PRIMARY BOOM
2	27175	1	WELDED ASS'Y; SECONDARY BOOM
3	23105	1	WELDED ASS'Y; TERTIARY BOOM
4	21749	1	EXTENSION CYLINDER
5	23217-1	2	BOOM PAD; UHMW, 'A', 3.19 x 1.88 x 0.50
6	23217-1	2	BOOM PAD; UHMW, 'A', 3.19 x 1.88 x 0.44
7	23217-2	2	BOOM PAD; UHMW, 'A', 3.19 x 2.13 x 0.44
8	23217-2	2	BOOM PAD; UHMW, 'A', 3.19 x 2.13 x 0.44
9	23217-13	2	BOOM PAD; UHMW, 'A', 3.19 x 2.13 x 0.38
10	23217-17	2	BOOM PAD; UHMW, 'B', 3.19 x 2.50 x 0.50
11	23183	2	V-BLOCK, SLIDER
12	23217-14	2	BOOM PAD; UHMW, 'B', 3.19 x 2.13 x 0.50
▲ 13	21-07	1	PIN; HAIRPIN COTTER
▲ 14	13401-1	1	CLEVIS PIN; 3/4 X 2" LG
15	24535	2	THRUST ROLLER; EXTENSION CYLINDER
16	22255	2	THRUST PIN; REAR, EXTENSION CYLINDER
17	22255	2	THRUST PIN; FRONT, EXTENSION CYLINDER
18	13459-2	2	ARROW
19	22490	2	SPACER; BOOM ARROW
20	26940	1	CABLE GUARD BRACKET
21	21560	1	ROLLER; UHMW, WIRE ROPE GUIDE

ITEM	PART NO.	QTY	DESCRIPTION
22	21936	2	FLAT, MOUNT; WIRE ROPE GUIDE
23	26577-1-25	1	CORD REEL ASSY (BLK STEEL CASE)
	26577-4	1	CORD REEL ASSY (BLK/YEL PLASTIC CASE)
24	27469-L-C-11	1	ANTI-TWO-BLOCK ASSEMBLY
25	-	-	-
26	21428	2	BUSHING; EXTENSION CYLINDER
27	21405	1	PIN; PIVOT, EXTENSION CYLINDER
28	!FWSH-100SAE	2	FLAT WASHER; 1" SAE
29	23116	2	PIN BLOCK REINFORCING
30	23928	2	CABLE SHEAVE
31	23929	2	SPACER; SHEAVE
32	27476-1	2	SPACER; COMPACT A2B
33	-	-	-
34	-	-	-
35	-	-	-
36	-	-	-
37	-	-	-
38	-	-	-
39	17949-1	1	LOAD BLOCK ASSEMBLY **(HT40)**
	17949-2	1	LOAD BLOCK ASSEMBLY **(HT45)**
	17949	1	LOAD BLOCK ASSEMBLY **(HT50)**
	17949-5	1	LOAD BLOCK ASSEMBLY **(HT60)**
40	17094-3/8-100	1	WIRE ROPE; 100 FT, NO HOOK **(HT40/45/50/55)**
	24916-3/8-100	1	WIRE ROPE; 100 FT, NO HOOK **(HT60)**
☼42	27483	1	ASS'Y; WORK LIGHT, LED

REFERENCE 26951 FOR REPLACEMENT PARTS DRAWING

☼ OPTIONAL; NOT INCLUDED WITH STANDARD EQUIPMENT

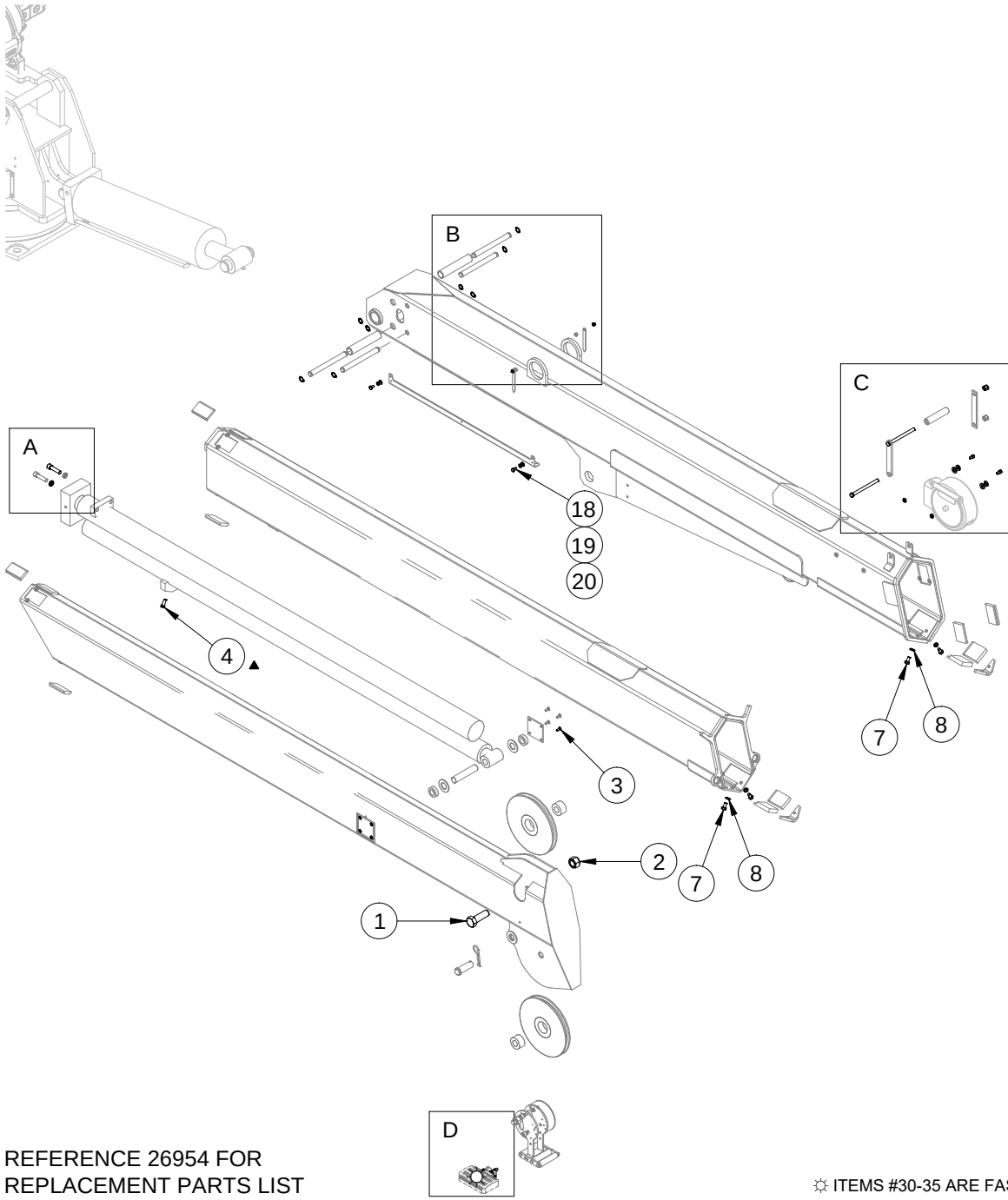

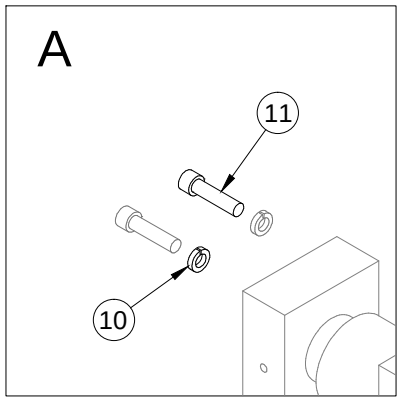

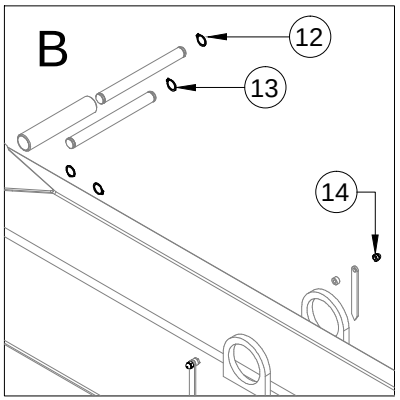

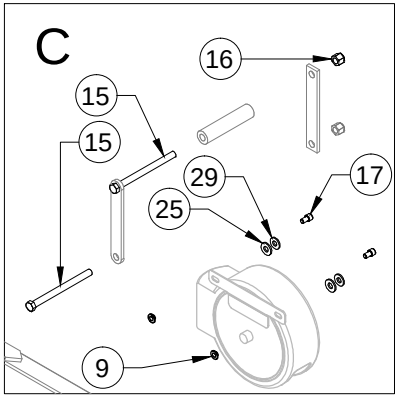

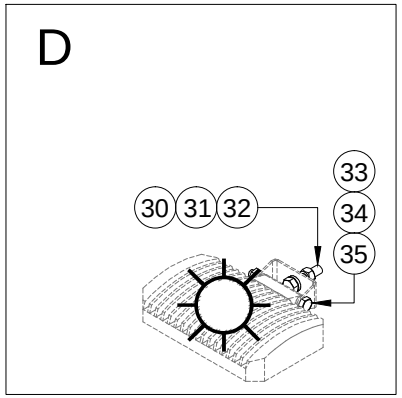

REFERENCE 26954 FOR
REPLACEMENT PARTS LIST

☼ ITEMS #30-35 ARE FASTENERS FOR OPTIONAL COMPONENTS - NOT INCLUDED WITH STANDARD EQUIPMENT

VENTURO®

VENCO VENTURO INDUSTRIES LLC
CINCINNATI, OHIO

TITLE	DATE	SECTION
RPLCMNT FASTENERS DRWNG - 26593 BOOM	11-18-24A	C400
HT40/45/50/60 - 25'	SUPERSEDES 06-11-24	26953

ITEM #	PART #	QTY	DESCRIPTION	WHERE-USED
1	17059-6	1	SHEAVE AXLE; HHCS, 3/4-10 X 2", S/S	TOP SHEAVE
2	!LNUT-07510	2	LOCK NUT, FULL, 3/4-10, GR. 5, ZINC	SHEAVES
3	!CACS02520050S	8	CACS; 1/4-20 X 1/2", S/S	PIN BLCK REINFORCING
4	!HHCS03816100N	2	HHCS; NYLON PATCH 3/8-16 X 1", GR. 5 ZINC	EXT. CYL. V-BLOCK
5	!HHCS02520100S	2	HHCS; 1/4-20 X 1", S/S	INCLINOMETER
6	!LNUT-02520NS	2	LOCK NUT; 1/4-20, NYLON, S/S	INCLINOMETER
7	!HHCS03816075S	4	HHCS; 3/8-16 X 3/4", S/S	V-BLOCKS
8	!LWSH-038	4	LOCK WASHER; 3/8", GR. 5, ZINC-PL	V-BLOCKS
▲ ⚠ 9	28198	2	INSULATING SLEEVE WASHER - 5/16"	CORD REEL
10	!LWSH-050-HC	2	LOCK WASHER; 1/2", HI-COLLAR	EXTENSION CYLINDER
11	!SHCS05013200	2	SHCS; 1/2-13 X 2"	EXTENSION CYLINDER
12	!SRNG-075	4	SNAP RING; 3/4"	EXT. CYL. REAR PINS
13	!SRNG-075	4	SNAP RING; 3/4"	EXT. CYL. FRONT PINS
14	!ANUT-02520S	2	ACORN NUT; 1/4-20, S/S	BOOM ARROWS
15	!HHCS04414550	2	HHCS; 7/16-14 X 5-1/2", GR. 5, ZINC	WIRE ROPE GUIDE
16	!LNUT-04414	2	LOCK NUT; 7/16-14, GR. 5, ZINC	WIRE ROPE GUIDE
17	!SHCS03118063S	2	SHCS; 5/16-18 X 5/8" LG, S/S	CORD REEL
18	!HHCS03118050S	2	HHCS; 5/16-11 X 1/2", S/S	CABLE GUARD BRACKET
19	!LWSH-031S	2	LOCK WASHER; 5/16", S/S	CABLE GUARD BRACKET
20	!FWSH-031S	2	FLAT WASHER; 5/16", S/S	CABLE GUARD BRACKET

ITEM #	PART #	QTY	DESCRIPTION	WHERE-USED
21	-	-	-	-
22	-	-	-	-
23	-	-	-	-
24	-	-	-	-
▲ ⚠ 25	01016	2	FIBER WASHER	CORD REEL
26	-	-	-	-
27	-	-	-	-
28	-	-	-	-
29	!FWSH-031	2	FLAT WASHER, 5/16"	CORD REEL
☼ 30	!HHCS03118125S	1	HHCS; 5/16-18 X 1-1/4", S/S	WORK LIGHT
☼ 31	!HNUT-03118S	2	HEX NUT; 5/16-18, S/S	WORK LIGHT
☼ 32	!FWSH-031S	1	FLAT WASHER; 5/16", S/S	WORK LIGHT
☼ 33	!HHCS02520250S	1	HHCS; 1/4-20 X 2-1/2", S/S	WORK LIGHT
☼ 34	!LWSH-025S	1	LOCK WASHER; 1/4", S/S	WORK LIGHT
☼ 35	!HNUT-02520S	1	HEX NUT; 1/4-20, S/S	WORK LIGHT
36	-	-	-	-
37	-	-	-	-
38	-	-	-	-
39	-	-	-	-
40	-	-	-	-

☼ ITEMS #30-35 ARE FOR OPTIONAL COMPONENTS - NOT INCLUDED WITH STANDARD EQUIPMENT

⚠ FOR 26577-1-** ONLY (NOT REQ'D FOR 26577-4)

REFERENCE 26953 FOR REPLACEMENT FASTENERS DRAWING

HHCS = HEX HEAD CAP SCREW PMS = PAN MACHINE SCREW S/S = STAINLESS STEEL

VENTURO®

VENCO VENTURO INDUSTRIES LLC
CINCINNATI, OHIO

TITLE	DATE	SECTION
PLCMNT FASTENERS LIST - 26593 BOOM	11-25-24B	C400
HT40/45/50/60 - 25'	SUPERSEDES 11-18-24A	26954

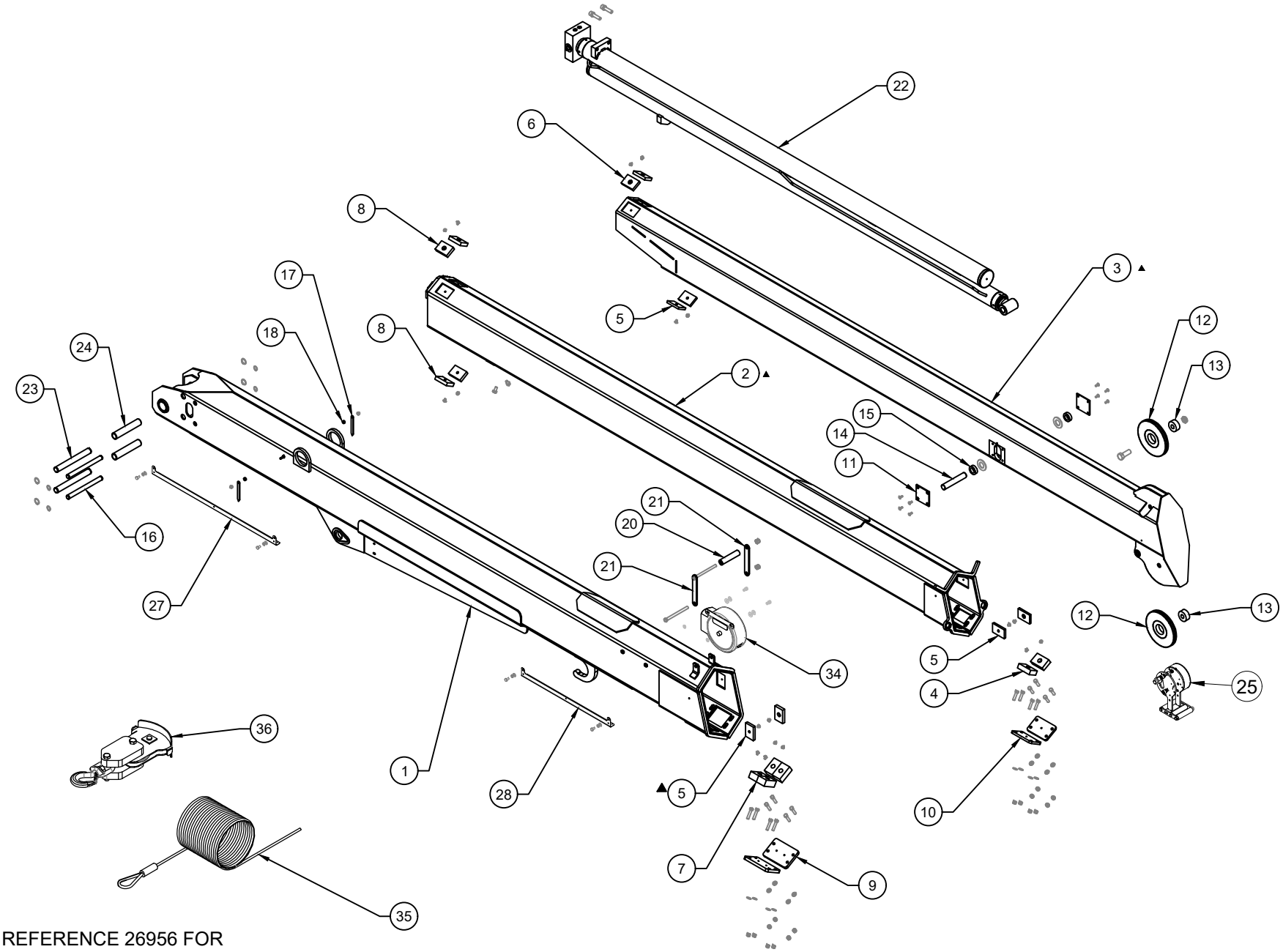

REFERENCE 26956 FOR
REPLACEMENT PARTS LIST

VENTURO®

VENCO VENTURO INDUSTRIES LLC
CINCINNATI, OHIO

TITLE	DATE	SECTION
REPL PARTS DWG, 30' BOOM, 26590	06-11-24	C400
HT45/60 - 30'	SUPERSEDES -	26955

REPLACEMENT PART LIST, 30' BOOM 26590

ITEM NO.	PART NO.	QTY	DESCRIPTION
1	26591	1	PRIMARY BOOM WELDMENT
2	23882	1	SECONDARY BOOM WELDMENT
3	23883	1	TERTIARY BOOM WELDMENT
4	23631-7	2	BOOM PAD; 0.88" THICK
5	23631-3	6	BOOM PAD; 0.38" THICK
6	23631-4	2	BOOM PAD; 0.50" THICK
7	23631-10	4	BOOM PAD; 1.25" THICK
8	23631-5	4	BOOM PAD; 0.63" THICK
9	23677	2	COVER PLATE; PRIM. ADJ. PAD
10	23678	2	COVER PLATE; SEC. ADJ. PAD
11	23116	2	PIN BLOCK; REINFORCING
12	23928	2	BOOM SHEAVE W/ BUSHING
13	23929	2	SPACER; 23927 & 23928 POLY SHEAVES
14	23906	1	PIN; PIVOT, ROD END, EXT. CYLINDER
15	21428	2	BUSHING
16	23904	2	EXTENSION CYLINDER 0.75" THRUST PIN
17	13459	2	ARROW
18	22490	2	SPACER; BOOM ARROW
19	-	-	-
20	21560	1	WIRE ROPE GUIDE; UMHW ROLLER
21	21936	2	WIRE ROPE GUIDE; FLAT, MOUNT
22	23875	1	EXTENSION CYLINDER
23	23905	2	EXTENSION CYLINDER 1" THRUST PIN
24	27283	2	THRUST ROLLER
25	27469-L-C-11	1	ANTI-TWO-BLOCK ASSEMBLY
26	-	-	-
27	26940	1	CABLE GUARD BRACKET (LONG)
28	26940-2	1	CABLE GUARD BRACKET (SHORT)
29	-	-	-
30	-	-	-
31	-	-	-
32	-	-	-
33	-	-	-
▲ 34	26577-1-30	1	CORD REEL ASSY (BLK STEEL CASE)
	26577-4	1	CORD REEL ASSY (BLK/YEL PLASTIC CASE)
35	17094-3/8-125	1	WIRE ROPE; 125 FT, NO HOOK (HT45/50)
	24916-3/8-125	1	WIRE ROPE; 125 FT, HIGH STR (HT60)
36	17949-2	-	LOAD BLOCK ASSEMBLY (HT45)
	17949-5	-	LOAD BLOCK ASSEMBLY (HT60)

REFERENCE 26955 FOR REPLACEMENT PARTS DRAWING

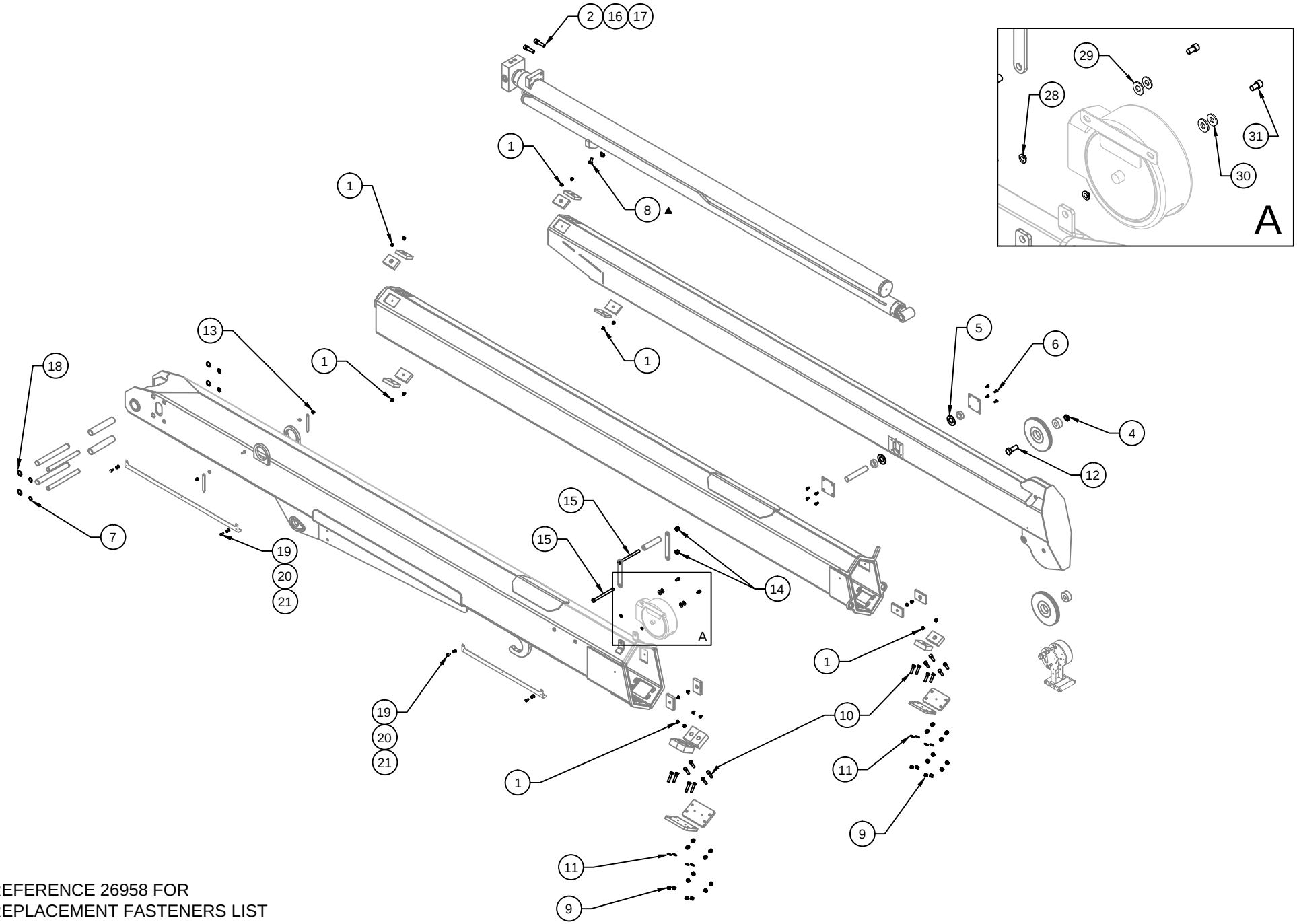

REFERENCE 26958 FOR
REPLACEMENT FASTENERS LIST

VENTURO® VENCO VENTURO INDUSTRIES LLC CINCINNATI, OHIO	TITLE REPL HARDWARE DWG, 30' BOOM 26590	DATE 11-18-24A	SECTION C400
	HT45/60 - 30'	SUPERSEDES 06-11-24	26957

REPLACEMENT FASTENERS LIST, 30' BOOM 26590

ITEM NO.	PART NO.	QTY.	DESCRIPTION
1	!THCS02520038	18	THCS; 1/4-20 x 3/8" LG, S/S
2	14159	1	SHIM KIT
3	-	-	-
4	!LNUT-07510	1	LOCK NUT; 3/4-10, NYLON, ZINC
5	!FWSH-100SAE	2	FLAT WASHER; 1" SAE
6	!CACS02520050S	8	CACS; 1/4-20 x 1/2" LG, S/S
7	!SRNG-075	4	SNAP RING; 3/4"
8	!HHCS03816100N	2	HHCS; NYLON PATCH 3/8-16 X 1", GR. 5 ZINC
9	!LNUT-03816	16	LOCK NUT; 3/8-16, GR. 5, ZINC
10	!HHCS03816175	16	HHCS; 3/8-16 x 1-3/4" LG, GR. 5, ZINC
11	!FWSH-038	16	FLAT WASHER; 3/8", ZINC
12	!HHCS07510350	1	HHCS; 3/4-10 x 3-1/2" LG, GR. 5, ZINC
13	!ANUT-02520S	2	ACORN NUT; 1/4-20, S/S
14	!LNUT-04414	2	LOCK NUT; 7/16-14, NYLON INSERT
15	!HHCS04414550	1	HHCS; 7/16-14 x 5-1/2", GR. 5, ZINC
16	!SHCS05013200	2	SHCS; 1/2-13 x 2"
17	!LWSH-050-HC	2	LOCK WASHER; 1/2, GR. 5, ZINC, HI-COLLAR
18	!SRNG-100	3	SNAP RING; 1"
19	!HHCS03118050S	4	HHCS; 5/16-18 X 1/2", S/S
20	!LWSH-031S	4	LOCK WASHER; 5/16", S/S
21	!FWSH-031S	4	FLAT WASHER; 5/16", S/S
22	-	-	-
23	-	-	-
24	-	-	-
25	-	-	-
26	-	-	-
27	!HHCS02520100S	2	HHCS; 1/4-20 x 1", S/S
▲ ⚠1 28	28198	2	INSULATING SLEEVE WASHER - 5/16"
▲ ⚠1 29	01016	2	FIBER WASHER
30	!FWSH-031	2	FLAT WASHER; 5/16"
31	!SHCS03118063S	2	SHCS; 5/16-18 X 5/8" LG, S/S
32	-	-	-

⚠1 FOR 26577-1-** ONLY (NOT REQ'D FOR 26577-4)

REFERENCE 26957 FOR REPLACEMENT FASTENERS DRAWING

VENTURO®

VENCO VENTURO INDUSTRIES LLC
CINCINNATI, OHIO

TITLE	DATE	SECTION
REPL FAST LIST, BOOM 26590	11-25-24B	C400
HT45/60 - 30'	SUPERSEDES 11-18-24A	26958

COMPACT A2B - 27469-* - REPLACEMENT PARTS LIST

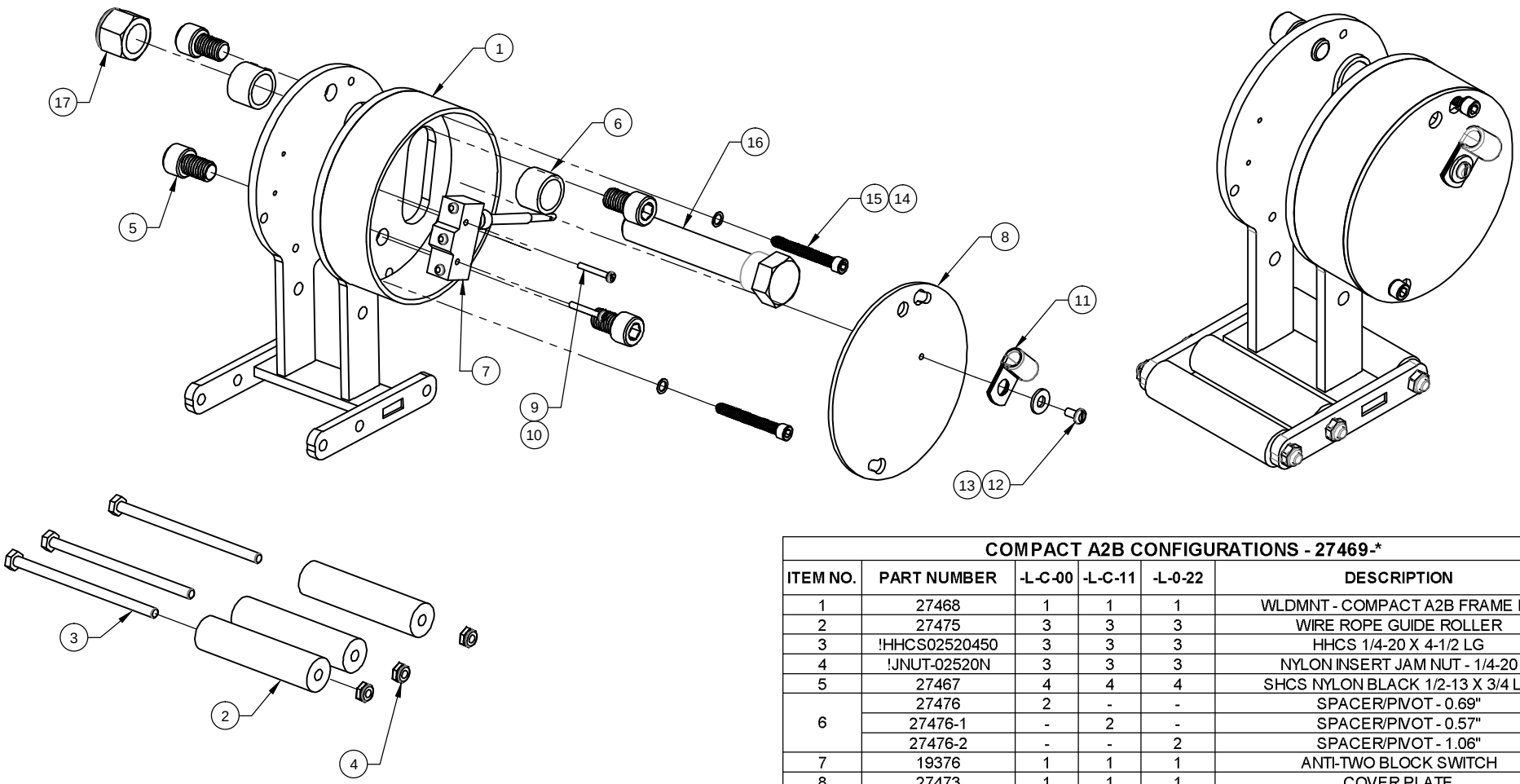

COMPACT A2B CONFIGURATIONS - 27469-*					
ITEM NO.	PART NUMBER	-L-C-00	-L-C-11	-L-0-22	DESCRIPTION
1	27468	1	1	1	WLDMNT - COMPACT A2B FRAME LH
2	27475	3	3	3	WIRE ROPE GUIDE ROLLER
3	!HHCS02520450	3	3	3	HHCS 1/4-20 X 4-1/2 LG
4	!JNUT-02520N	3	3	3	NYLON INSERT JAM NUT - 1/4-20
5	27467	4	4	4	SHCS NYLON BLACK 1/2-13 X 3/4 LG
6	27476	2	-	-	SPACER/PIVOT - 0.69"
	27476-1	-	2	-	SPACER/PIVOT - 0.57"
	27476-2	-	-	2	SPACER/PIVOT - 1.06"
7	19376	1	1	1	ANTI-TWO BLOCK SWITCH
8	27473	1	1	1	COVER PLATE
9	!PHCS#0632100	2	2	2	PHILLIPS HEAD CAP SCREW 6-32 X 1 LONG
10	!LWSH-#06	2	2	2	LOCK WASHER - 6
11	19269	1	1	1	WIRE CLAMP, 3/8 ID VIBRATION DAMPING
12	!PHCS#1032038	1	1	1	PAN HEAD CAP SCREW 10-32 X 3/8 LONG
13	!FWSH-025	1	1	1	FLAT WASHER - 1/4
14	!SHCS02520200SS	2	2	2	SHCS, 1/4-20 X 2.00 LONG, STAINLESS STEEL
15	23379	2	2	2	WASHER, NYLON, BLACK, .375" O.D. X .25" I.D.
16	28362	1	1	-	COMPACT A2B CUT-OUT CAM WELDED ASSY.
	!HHCS07510450	-	-	1	HHCS, 3/4-10 X 4.50 LONG, GR.5
17	LNUT-07510	1	1	1	NYLON INSERT LOCK NUT - 3/4-10

VENTURO®

VENCO VENTURO INDUSTRIES LLC
CINCINNATI, OHIO

TITLE	DATE	SECTION
REPLACEMENT PARTS LIST	7-10-24A	C400
COMPACT A2B - 27469-*	SUPERSEDES 06-11-24	26942

Compact A2B with Stowage Cut-out, Install/Adjustment Instructions (Kit: 28375)

The purpose of the Stowage Cut-out system is to prevent a situation whereby the wire rope is over-tensioned when the load block / wire rope is attached to the stowage hook on the bottom of the primary boom assembly. ***However, the OPERATOR is ultimately responsible for ensuring that the wire rope is not over-tensioned when stowing the wire rope and boom assembly into the boom rest.***

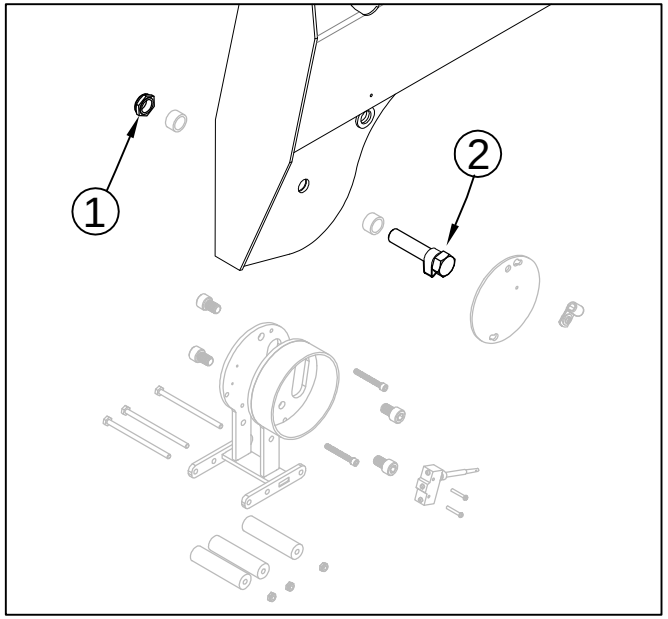

1. Initially, apply a light torque to the nyloc full nut Item #1 (P/N !LNUT-07510), such that the axle bolt & cam welded assembly can be rotated / adjusted in the steps below.
2. Position the cam ***lobe*** Item #2 (P/N 28362) so that it is pointing towards the housing / mechanism
3. Hang the load block on the open stowage hook under the primary boom.
4. Thread the wire rope through the load block in a two-line configuration; the wire rope end / eyelet is pinned in the standard position on the tertiary boom tip
5. Actuate the Winch Up function until the load block and wire rope are ***taut*** enough to prevent the load block from bouncing during transit, ***but do not tighten excessively so as to prevent damage to the wire rope.***
6. Rotate the axle bolt & cam welded assembly towards the housing (clockwise in standard configuration) until the cam lobe makes contact with and trips the wobble micro switch and actuates the A2B function.
7. Once adjusted, torque the nyloc full nut (Item #1) to 100 ft*lbs to prevent further rotational movement of the axle bolt & cam welded assembly.
8. Test the A2B trip-point by slackening and tightening the wire rope / load block assembly by actuating Winch Up/Down. ***NOTE: The point at which the A2B trips WILL vary to some degree, depending upon the winch up speed. It is recommended to actuate the winch up function slowly, which will yield a consistent and repeatable result, in terms of wire rope tension when stowed.***

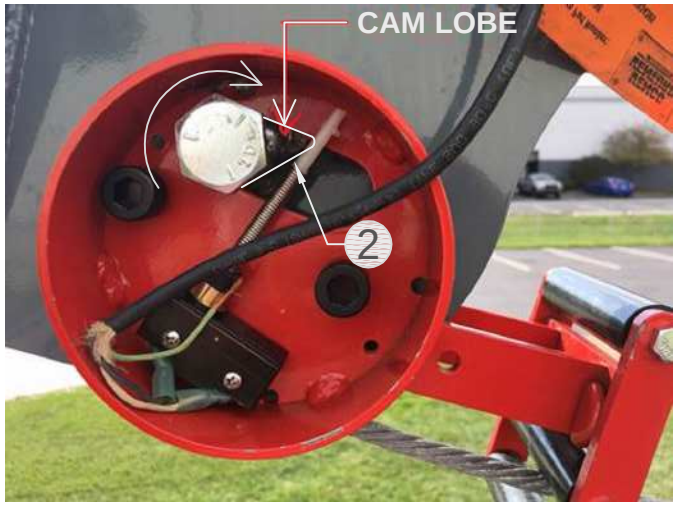

Contact Venturo Tech Support for assistance. 1-800-226-2238 ext. 124

WORK LIGHT INSTALLATION: 28240-1 (3-WIRE CORD REEL ON NON-VLC CRANES)

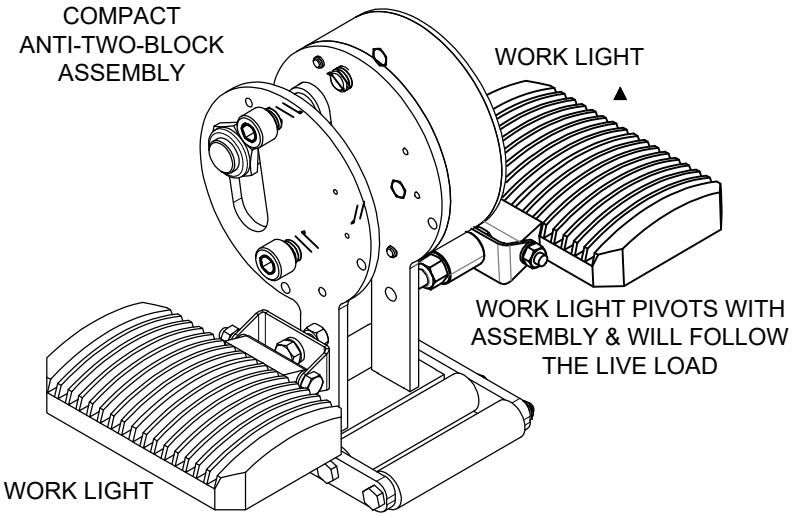

	BILL OF MATERIALS		-1	28240
	#	DESCRIPTION		PART NUMBER
▲	1	IDWG; WORK LIGHT INSTALLATION, NON-VLC CRANES	1	28855
▲	2	LED WORK LIGHT	2	27483
	3	TERMINAL; 16G, FEMALE, QUICK-CONNECT	3	!TERM16G250QCFI
	4	TERMINAL; 16G, MALE, QUICK-CONNECT	4	!TERM16G250QCM
	5	WIRE ASS'Y; 16G, BLACK, 28", #6 RING - STRIPPED END	2	22254-BLK280AO
	6	WIRE ASS'Y; 16G, BLACK, 28", QCF - STRIPPED END	2	22254-BLK280GO
	7	TOGGLE SWITCH; ON / OFF, IP-RATED	1	22476
	8	HALF-BOOT, FOR IP-RATED TOGGLE SWITCH	1	19793
	9	DECAL; ON/OFF, OPTIONAL WORK LIGHT W/ TOGGLE	1	28307
	10	WIRE ASS'Y; 16G, RED, 20", #6 RING - #10 RING	1	22254-RED200AB
	11	TERMINAL; 16G, #6 RING, CLOSED-END	1	!TERM16G#6RG
▲	12	STAND OFF; .75"OD X .38" ID X 1" LONG, ALUM (LEFT SIDE MOUNT)	1	24496

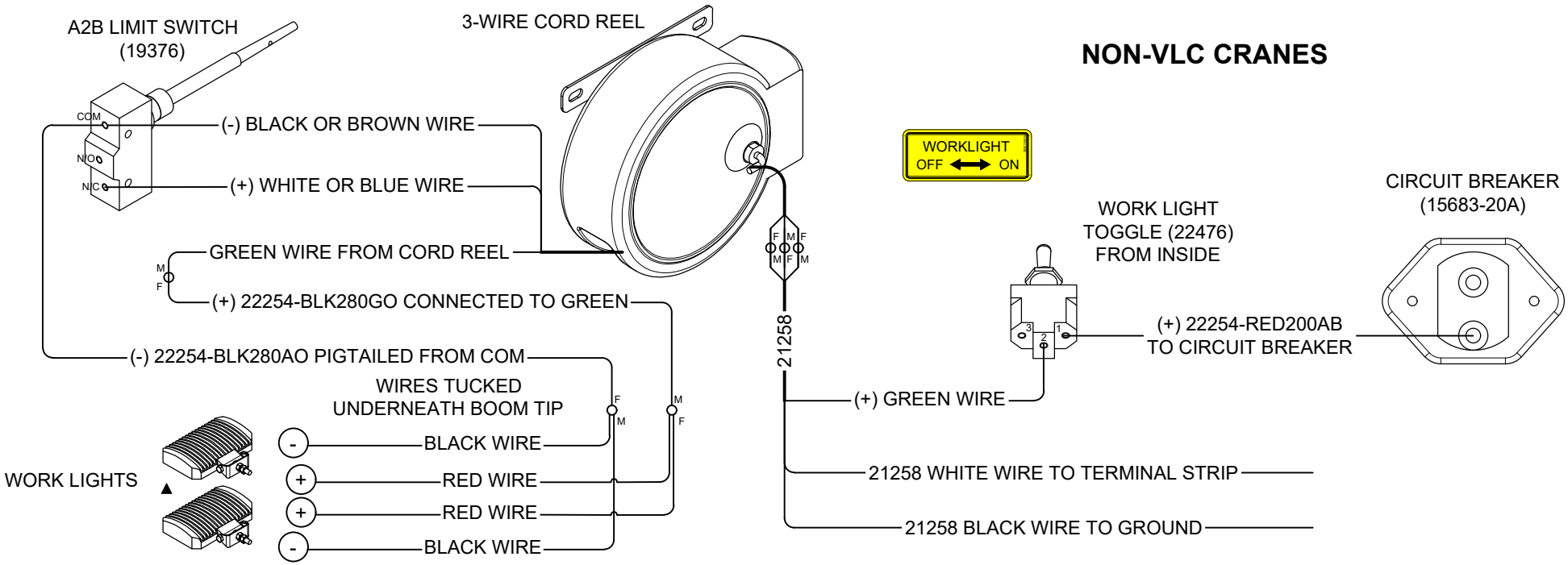

VENTURO®

VENCO VENTURO INDUSTRIES LLC
CINCINNATI, OHIO

TITLE	DATE	SECTION
WORK LIGHT INSTALLATION, 3-WIRE CORD REEL	06-25-26A	C400
NON-VLC CRANES	SUPERSEDES 09-13-24	28855

TI1 & TI2 WINCH REPLACEMENT PARTS DRAWING

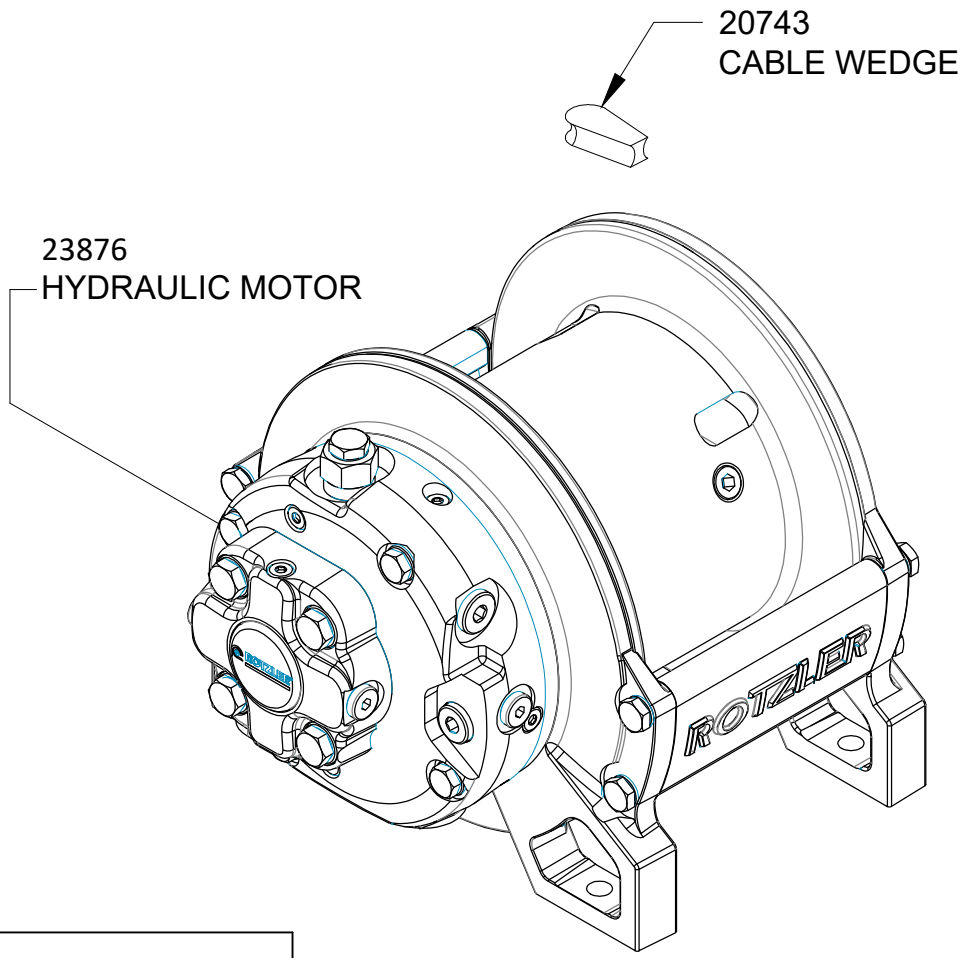

WINCH SEALS PACKAGE	
TI1	TI2
23874	23848

VENTURO® VENCO VENTURO INDUSTRIES LLC CINCINNATI, OHIO	TITLE TI1 & TI2 REPLACEMENT PARTS DRAWING	DATE 05-30-23	SECTION C400
	HT40/45/50KX	SUPERSEDES -	26896

REPLACEMENT PARTS DRAWING, HYDRAULIC COMPONENTS

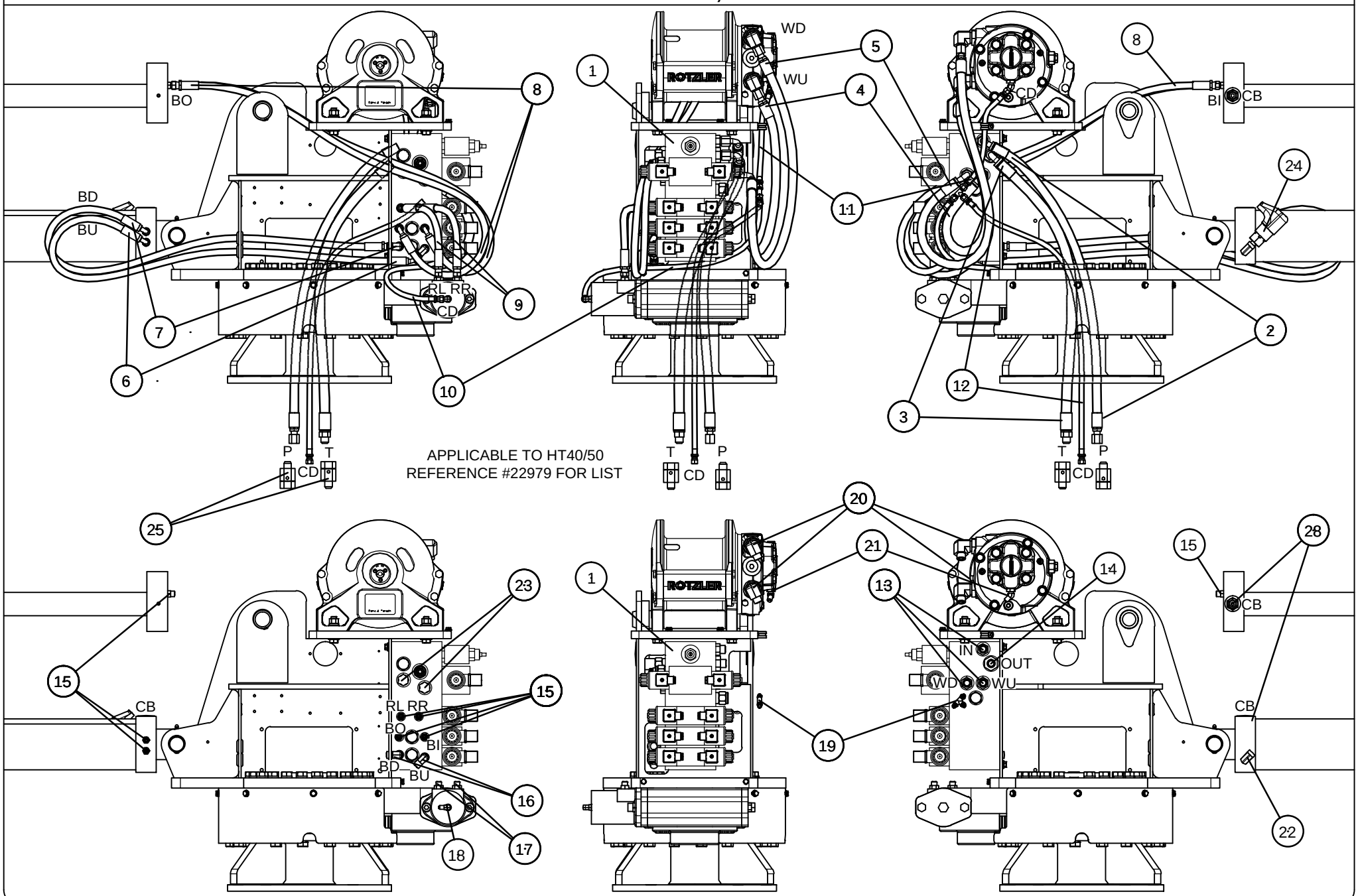

VENTURO®

VENCO VENTURO INDUSTRIES LLC
CINCINNATI, OHIO

TITLE	DATE	SECTION
REPLACEMENT PARTS, HYD. COMPONENTS	04-27-21F	C400
HT40/50 PROPORTIONAL SERIES CRANES	SUPERSEDES 10-22-20E	22978

REPLACEMENT PARTS LIST; HYDRAULIC COMPONENTS

#	DESCRIPTION	QTY	PART NUMBER	APPLICATION
1	VALVE MANIFOLD; PROPORTIONAL, HT40-55KX	1	22736H-3	REAR OF MECHANISM, INSIDE REAR COVER
2	HOSE ASSEMBLY; PRESSURE SUPPLY	1	23798	RIGHT SIDE VALVE BANK TO COMPARTMENT SIDE
3	HOSE ASSEMBLY; RETURN SUPPLY	1	23799	RIGHT SIDE VALVE BANK TO COMPARTMENT SIDE
4	HOSE ASSEMBLY; WINCH UP	1	27024	RIGHT SIDE VALVE BANK TO WINCH UP PORT
5	HOSE ASSEMBLY; WINCH DOWN	1	27025	RIGHT SIDE VALVE BANK TO WINCH DOWN PORT
6	HOSE ASSEMBLY; BOOM UP	1	27026	LEFT SIDE VALVE BANK TO BOOM UP PORT
7	HOSE ASSEMBLY; BOOM DOWN	1	27027	LEFT SIDE VALVE BANK TO BOOM DOWN PORT
8	HOSE ASSEMBLY; BOOM IN & OUT	2	27592	EXTENSION PORTS TO LEFT SIDE VALVE BANK
9	HOSE ASSEMBLY; ROTATION LEFT & RIGHT	2	27598	LEFT SIDE VALVE BANK TO ROTATION PORTS
10	HOSE ASSEMBLY; WINCH CASE DRAIN	1	22952	ROTATION CASE DRAIN TO T-FITTING JUNCTION
11	HOSE ASSEMBLY; ROTATION CASE DRAIN	1	22953	WINCH CASE DRAIN TO T-FITTING JUNCTION
12	HOSE ASSEMBLY; CASE DRAIN OUT	1	22903	T-FITTING JUNCTION TO COMPARTMENT SIDE
13	FITTING; ADAPTER, STRAIGHT, 8OFS-10MO	3	FF6400-0810	RIGHT SIDE VALVE BANK; IN, WU & WD PORTS
14	FITTING; ADAPTER, STRAIGHT, 8OFS-12MO	1	FF6400-0812	RIGHT SIDE VALVE BANK, OUT PORT
15	FITTING; ADAPTER, STRAIGHT, 6OFS-6MO	8	FF6400-0606	ELEVATION, EXTENSION, RL, RR, BI & BO PORTS
16	FITTING; ADAPTER, 90° ELBOW, 6OFS-6MO	2	FF6801-0606	LEFT SIDE VALVE BANK, BU & BD PORTS
17	FITTING; ADAPTER, STRAIGHT, 6OFS-10MO	2	FF6400-0610	ROTATION RIGHT & LEFT PORTS
18	FITTING; ADAPTER, 90° ELBOW, 4MJ-4MO	1	H6801-0404	ROTATION CASE DRAIN PORT
19	FITTING; ADAPTER, T-SHAPE, 4MJ-4MJ-4MJ	1	H2603-040404	T-FITTING JUNCTION FOR CASE DRAIN HOSES
20	FITTING; ADAPTER, 90° ELBOW, 8OFS-12MO BRITISH	2	FF3801-8-12	WINCH UP & DOWN PORTS, ROTZLER TI SERIES
21	FITTING; ADAPTER, 45° ELBOW, 4MJ-4MO BRITISH	1	3802-0404	WINCH CASE DRAIN PORT, ROTZLER TI SERIES
22	FITTING; ADAPTER, 90° ELBOW, 4MO-4FO	1	H6805-0404	ELEVATION BASE-END, PRESSURE SWITCH
23	FITTING; PLUG, 10MO	2	H6408-10	LEFT SIDE VALVE BANK, WU & WD PORTS
24	PRESSURE SWITCH, 2900 PSI RATING	1	17460-2900-21	BASE-END ON ELEVATION CYLINDER
▲ 25	LIVE SWIVEL; CONTINUOUS, STRAIGHT, 8MJ-8FJ	2	22764	PRESSURE & RETURN HOSES, COMPARTMENT SIDE
26	COUNTER-BALANCE VALVE; CBPA, 50/40, 3000 PSI SYS.	2	20893	ELEVATION & EXTENSION CYLINDER VALVE

HYDRAULIC FUNCTION KEY

P	PRESSURE SUPPLY	RL	ROTATION LEFT
T	TANK RETURN	RR	ROTATION RIGHT
CD	CASE DRAIN	BO	BOOM OUT
IN	PRESSURE IN	BI	BOOM IN
OUT	RETURN OUT	BU	BOOM UP
WU	WINCH UP	BD	BOOM DOWN
WD	WINCH DOWN	CB	COUNTER-BALANCE VALVE

REFERENCE #22978 FOR REPLACEMENT PARTS DRAWING

22736 SERIES VALVE MANIFOLD REPLACEMENT PARTS

PRIORITY FLOW VALVE		
VALVE P/N	MANIFOLD	CRANE
22312-6.00	22736H	HT40/50
22312-7.50	22736H-1	HT66
22312-7.50	22736H-2	HT60
22312-7.50	22736H-3	HT40/45/50
NOT SHOWN - LOCATED ON RIGHT SIDE		

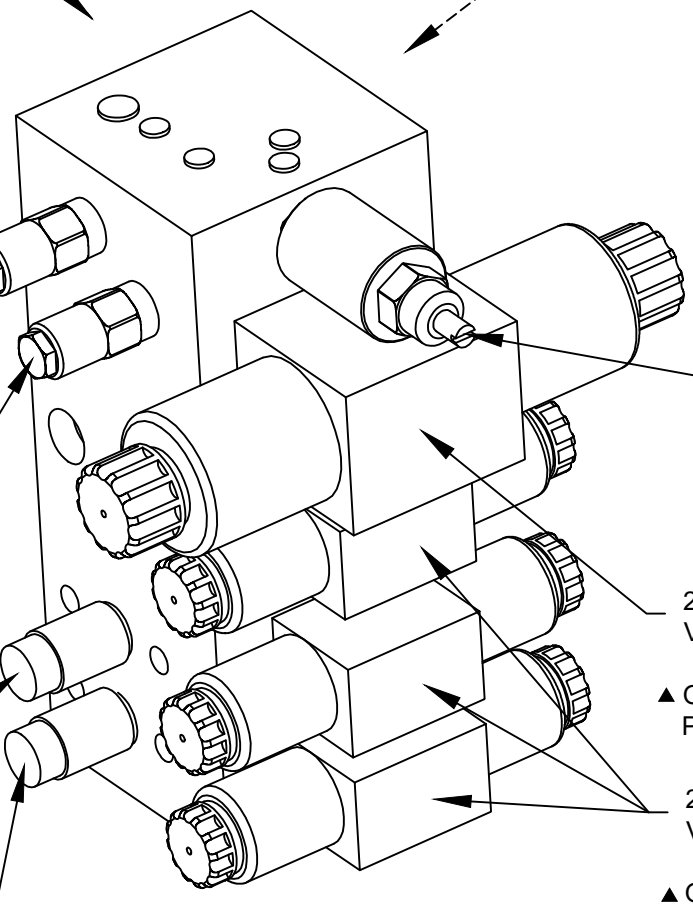

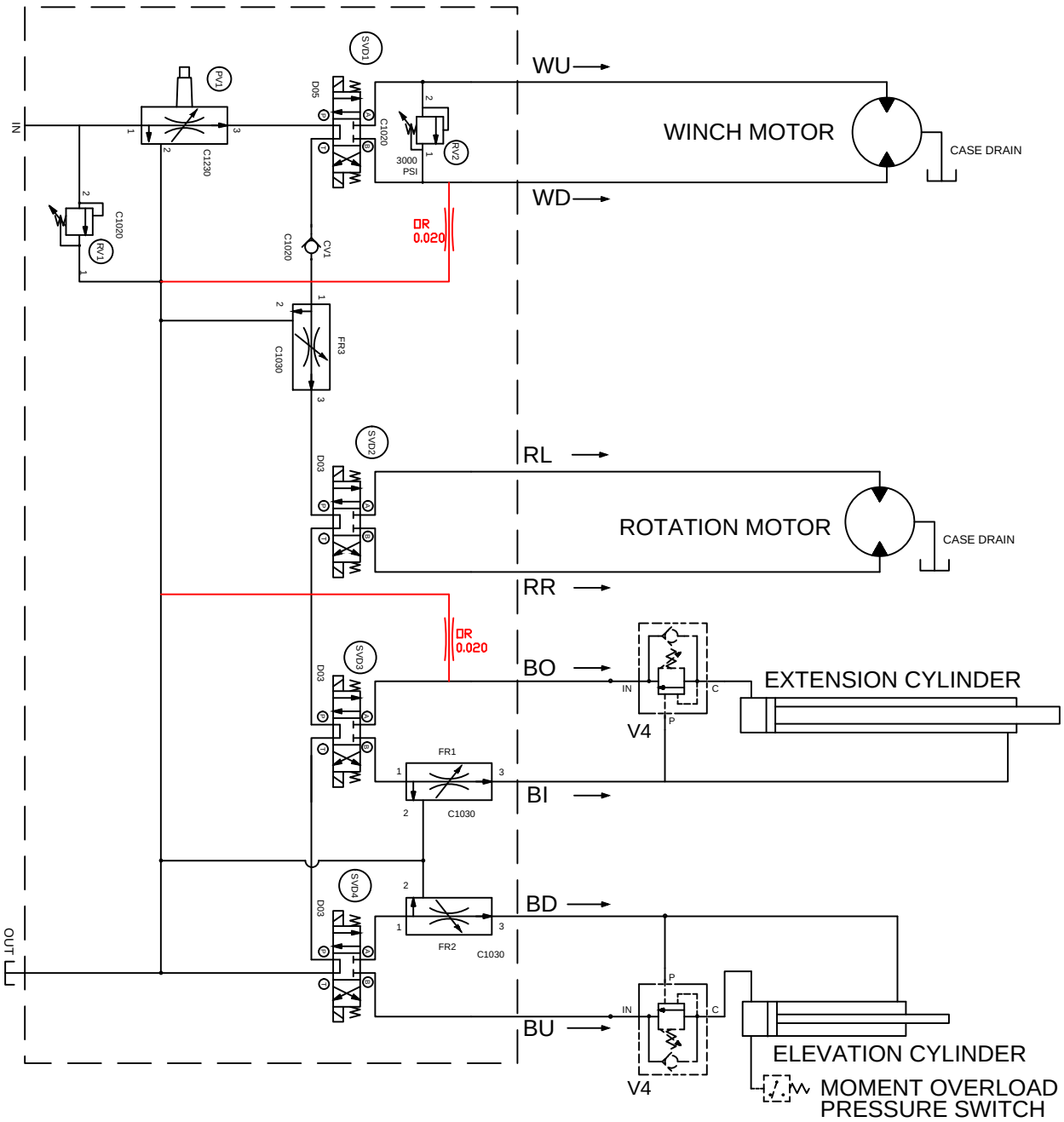

PVI	PROPORTIONAL CONTROL VALVE (SIMPLIFIED REP)
RV1	INLET RELIEF VALVE
RV2	WINCH RELIEF VALVE
FR1	PRIORITY FLOW REGULATOR
FR2	PRIORITY FLOW REGULATOR
FR3	PRIORITY FLOW REGULATOR
SVD1	3 POSITION - 4 WAY VALVE
SVD2	3 POSITION - 4 WAY VALVE
SVD3	3 POSITION - 4 WAY VALVE
SVD4	3 POSITION - 4 WAY VALVE

VENTURO®

VENCO VENTURO INDUSTRIES LLC
CINCINNATI, OHIO

TITLE	DATE	SECTION
HYDRAULIC SYSTEM DIAGRAM	06-17-24E	C400
HT40/50/66KX; PROPORTIONAL	SUPERSEDES 12-04-23D	27352

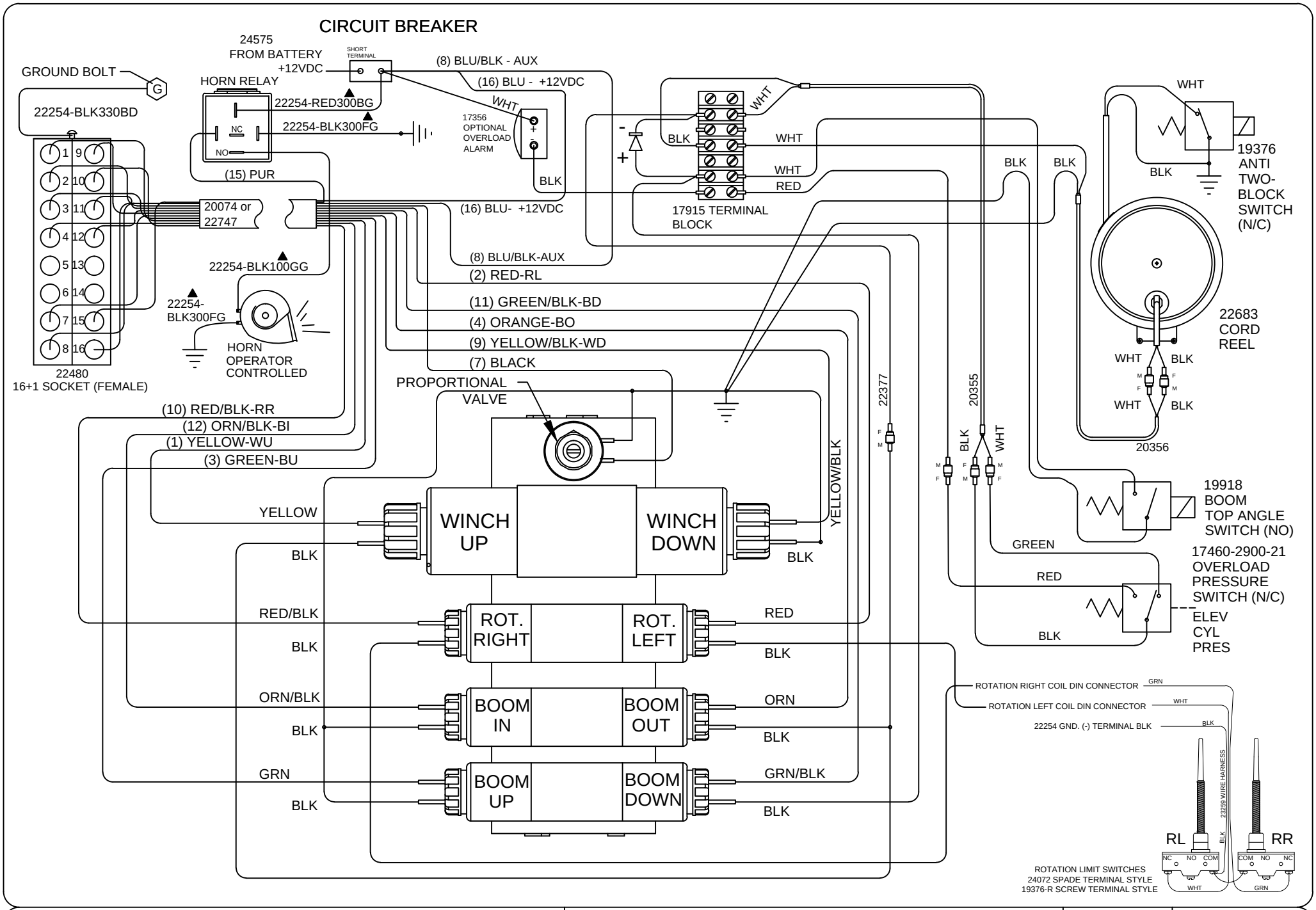

VENTURO®

VENCO VENTURO INDUSTRIES LLC
CINCINNATI, OHIO

TITLE	DATE	SECTION
WIRING DIAGRAM	02-25-25A	C400
HT40/50KX PROPORTIONAL	SUPERSEDES 10-08-24	26898

▲ SOCKET WIRING; 16-PIN, W/ OPTIONAL ENG CONTROLS

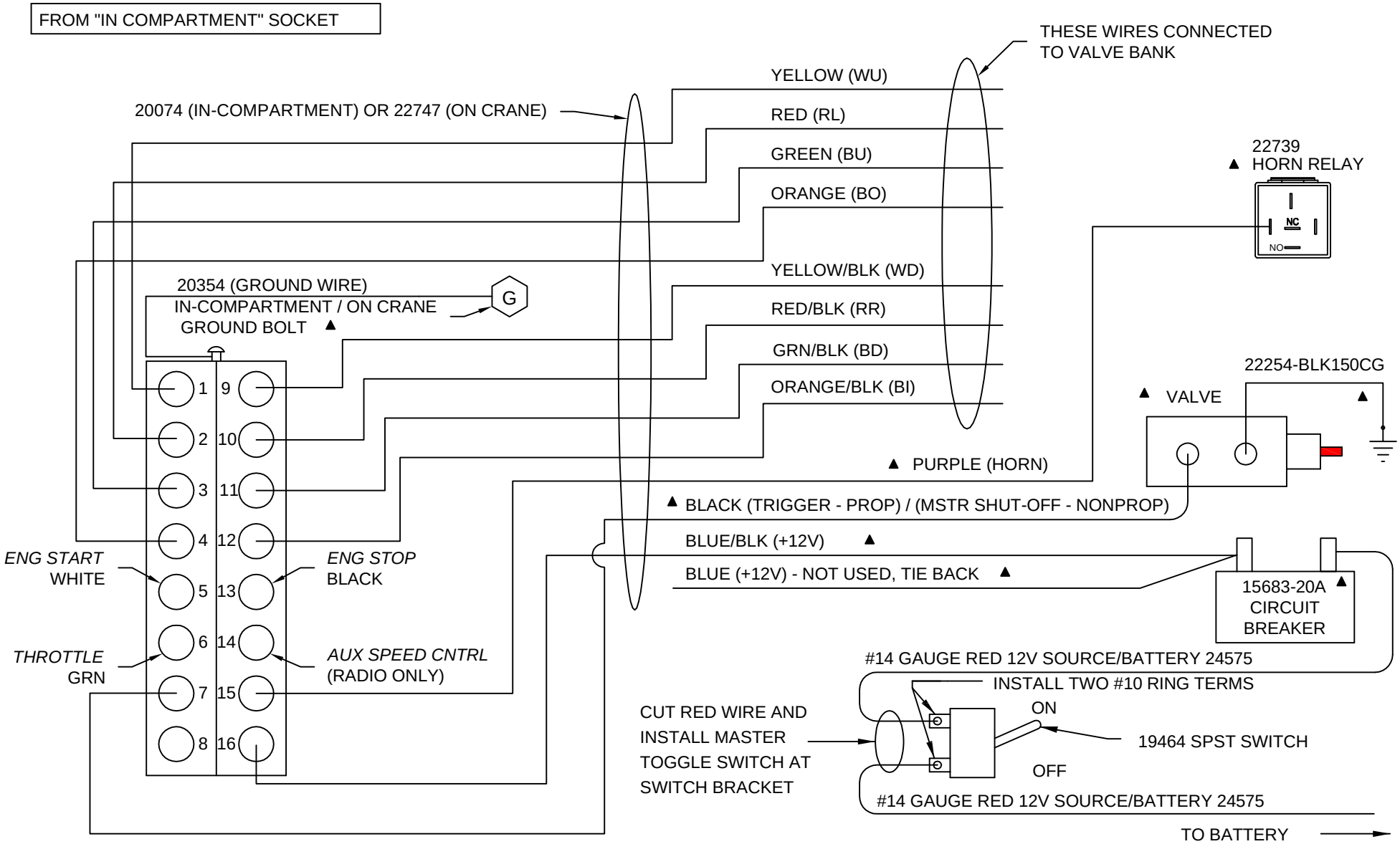

▲ ENGINE CONTROLS (#22616) SOLD AS AN OPTION (*NOT INCLUDED WITH CRANE*)

VENTURO® VENCO VENTURO INDUSTRIES LLC CINCINNATI, OHIO	TITLE SOCKET WIRING; 16 PIN	DATE 02-17-15G	SECTION C400
	HT CRANES	SUPERSEDES 02-21-14F	22125

21988 PENDANT; PROP, NO ENG CNTRL, E-STOP / HORN

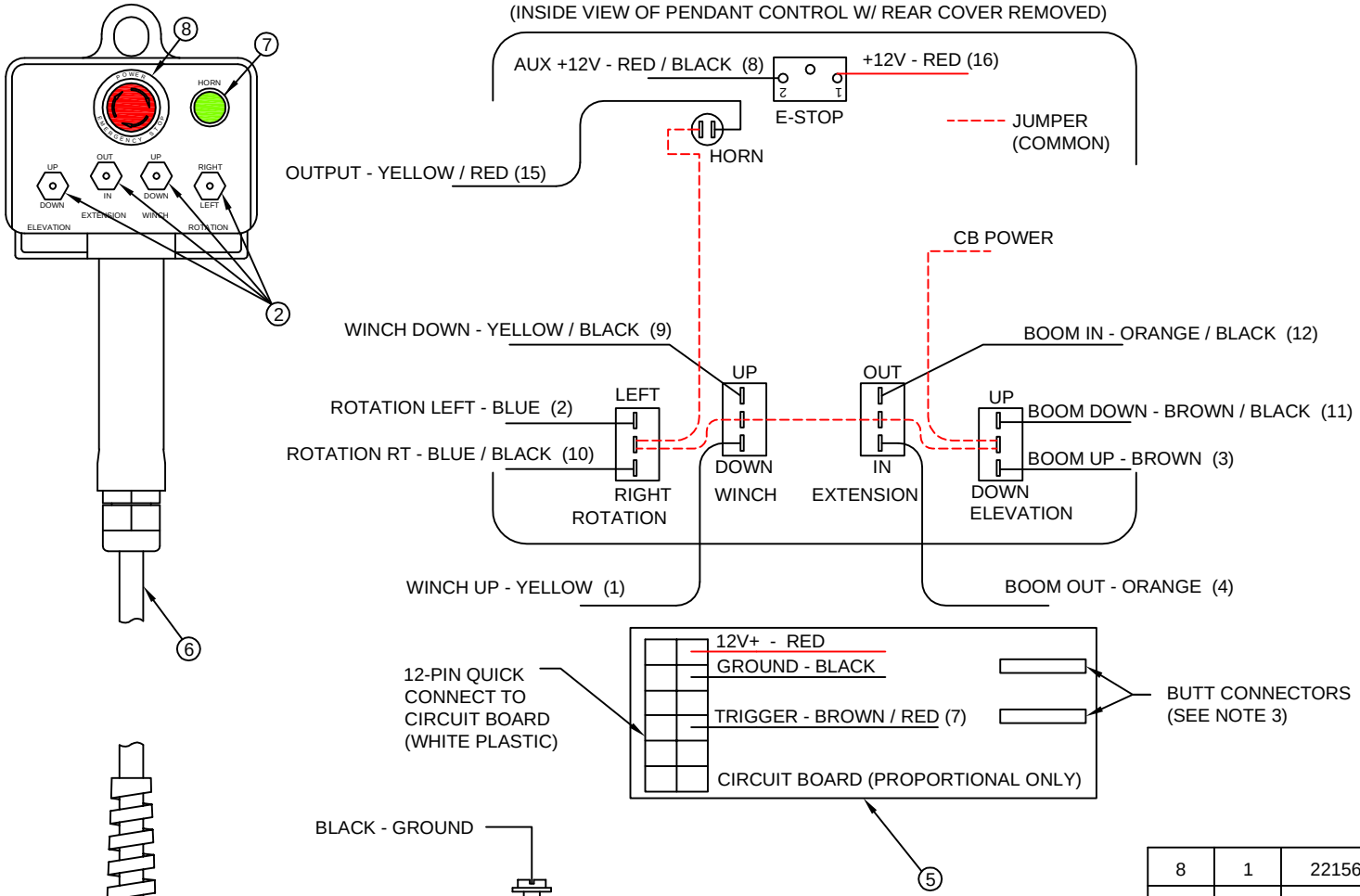

NOTE 1:
WIRE TERMINALS TO BE INSTALLED 'AFTER' ROUTING REPLACEMENT CORD ASSY THROUGH PENDANT HEAD AND PLUG HOUSING.

NOTE 2:
STOW OR CUT BACK UNUSED WIRES.

NOTE 3:
WHEN REPLACING CORD ASSY, CUT BLACK AND BLACK / RED WIRES FROM 12-PIN QUICK CONNECT AND INSTALL 'BUTT CONNECTORS'; MATCH UP BLACK TO BLACK WIRES AND BLACK / RED TO BLACK / RED WIRES FROM REPLACEMENT CORD ASSY.

MODEL	STARTING S/N
HT25K(X)	120300
HT30K(X)	115300
HT40KX(X)	100900
HT50KX(X)	110600
HT66KXX	150300

ITEM	QTY	PART NO.	DESCRIPTION
8	1	22156	SWITCH; E-STOP
7	1	22155	SWITCH; PUSHBUTTON, HORN
6	1	22135	KIT; REPLACEMENT CORD ASSY
5	1	22082	CIRCUIT BOARD; PROP VALVE CONTROLLER
4	1	22472	INSERT; MALE, 16 + 1 POLE
3	1	22471	PLUG CASE; 16 + 1 POLE
2	4	22081	SWITCH; SPDT, MOMENTARY
1	-	-	-

VENTURO®

VENCO VENTURO INDUSTRIES LLC
CINCINNATI, OHIO

TITLE	DATE	SECTION
REPLACEMENT PARTS DWG & LIST	10-03-14	C400
21988 PNDNT; PROP, NO ENG CNT, ESTP/HRN	SUPERSEDES -	23073

21987 PENDANT; PROP, ENG CNTRL, E-STOP / HORN

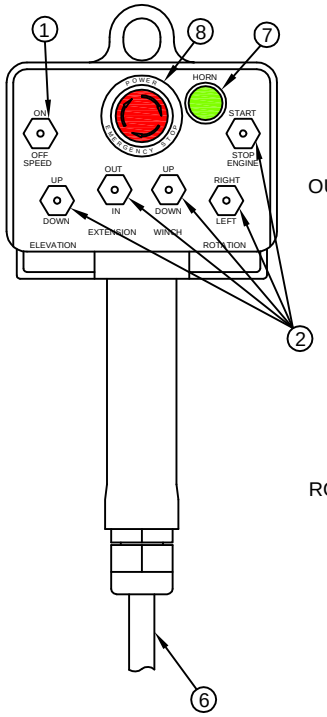

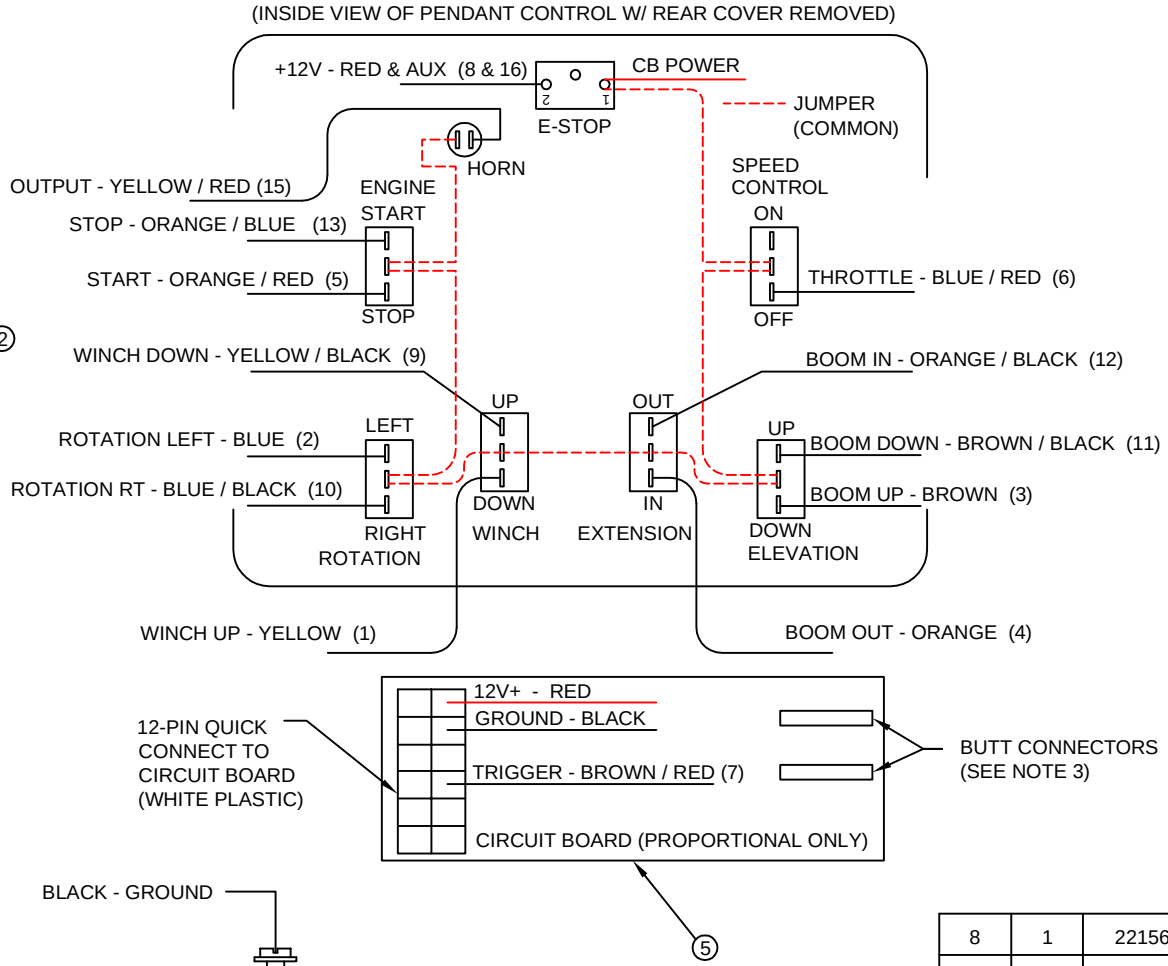

NOTE 1:
WIRE TERMINALS TO BE INSTALLED 'AFTER' ROUTING REPLACEMENT CORD ASSY THROUGH PENDANT HEAD AND PLUG HOUSING.

NOTE 2:
STOW OR CUT BACK UNUSED WIRES.

NOTE 3:
WHEN REPLACING CORD ASSY, CUT BLACK AND BLACK / RED WIRES FROM 12-PIN QUICK CONNECT AND INSTALL 'BUTT CONNECTORS'; MATCH UP BLACK TO BLACK WIRES AND BLACK / RED TO BLACK / RED WIRES FROM REPLACEMENT CORD ASSY.

MODEL	STARTING S/N
HT25K(X)	120300
HT30K(X)	115300
HT40KX(X)	100900
HT50KX(X)	110600
HT66KXX	150300

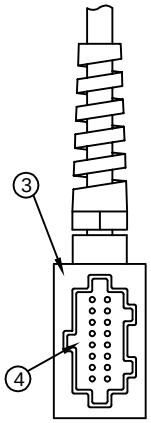

16-PIN PLUG ASSY.

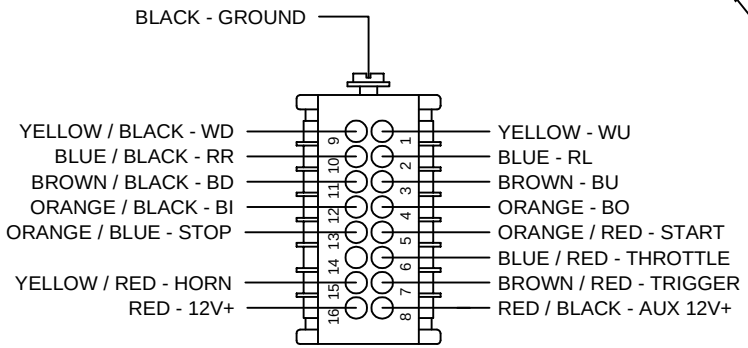

16-PIN PLUG - BACKSIDE VIEW

ITEM	QTY	PART NO.	DESCRIPTION
8	1	22156	SWITCH; E-STOP
7	1	22155	SWITCH; PUSHBUTTON, HORN
6	1	22135	KIT; REPLACEMENT CORD ASSY
5	1	22082	CIRCUIT BOARD; PROP VALVE CONTROLLER
4	1	22472	INSERT; MALE, 16 + 1 POLE
3	1	22471	PLUG CASE; 16 + 1 POLE
2	5	22081	SWITCH; SPDT, MOMENTARY
1	1	22080	SWITCH; SPST

VENTURO®

VENCO VENTURO INDUSTRIES LLC
CINCINNATI, OHIO

TITLE	DATE	SECTION
REPLACEMENT PARTS DWG & LIST	10-03-14	C400
21987 PENDANT; PROP, ENG CNTL, ESTP/HRN	SUPERSEDES -	23072

21983 RADIO; PROP, NON-CAN, ENG CNTRLS, E-STOP/HORN

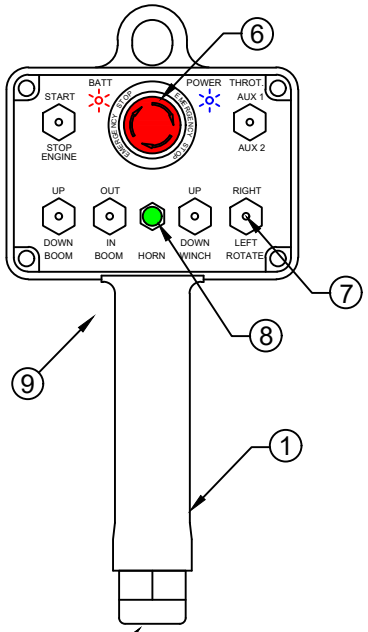

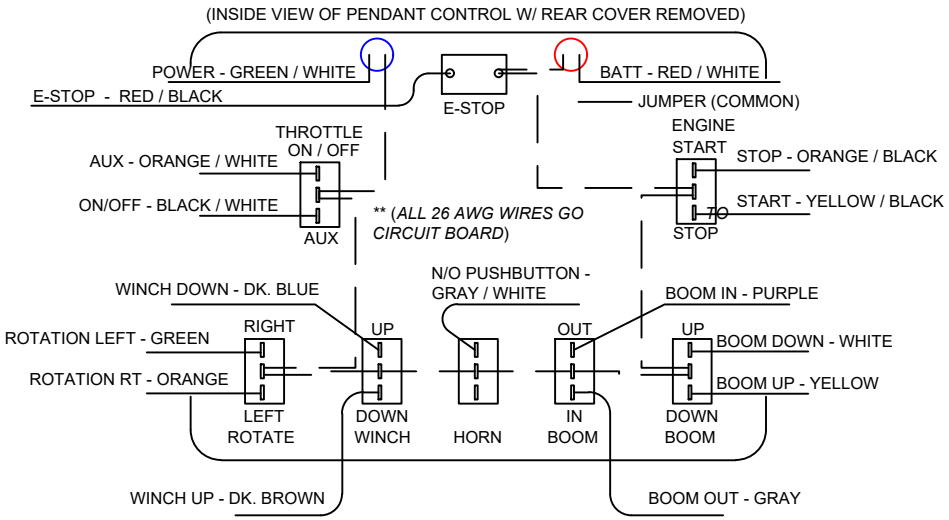

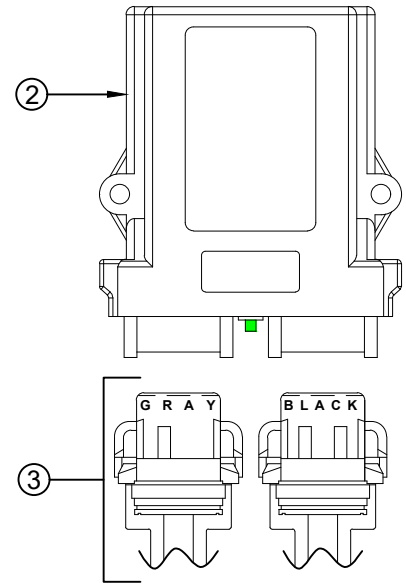

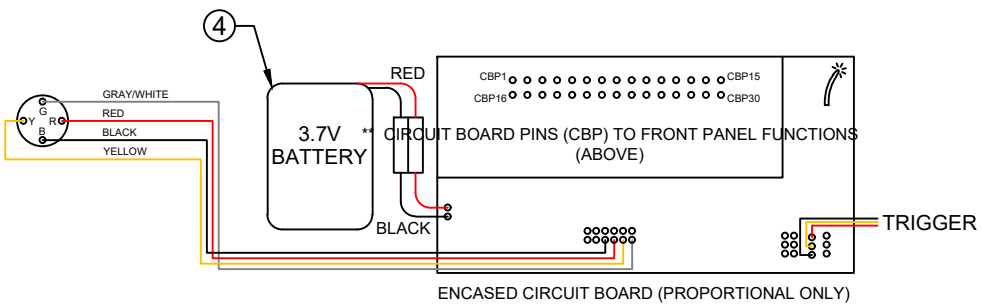

COMPONENTS		
ITEM NO.	PART NO.	DESCRIPTION
1	21983-TX	TRANSMITTER
2	21983-RX	RECEIVER
3	21983-HN	HARNESS
4	22965-BATT	BATTERY
5	22965-CHGR	CHARGER (NOT SHOWN)
6	21983-STP	E-STOP BUTTON
7	21983-TOG	FUNCTION TOGGLE
8	21983-HOR	HORN BUTTON & BOOT
9	23234	PROP TRIGGER (NOT SHOWN)
10	21983-CR	CHARGER RECEPTACLE ▲

CABLE 1 = GRAY CONNECTOR
CABLE 2 = BLACK CONNECTOR

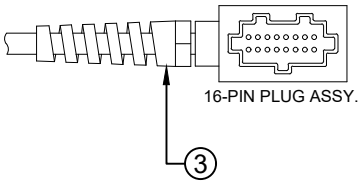

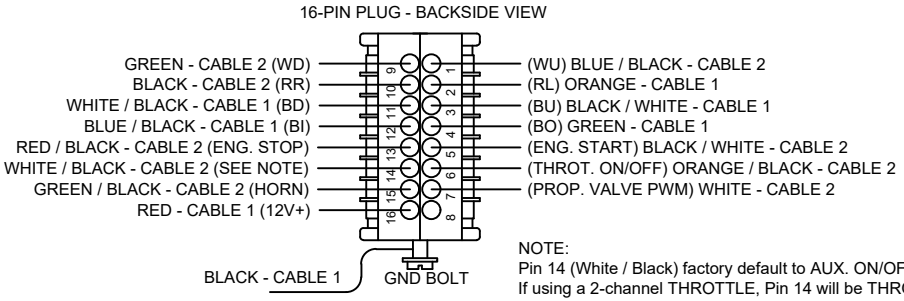

NOTE:
Pin 14 (White / Black) factory default to AUX. ON/OFF
If using a 2-channel THROTTLE, Pin 14 will be THROTTLE DOWN.

VENTURO®

VENCO VENTURO INDUSTRIES LLC
CINCINNATI, OHIO

TITLE	DATE	SECTION
REPLACEMENT PARTS DWG & LIST	10-16-26B	C400
HT PROPORTIONAL SERIES CRANES	SUPERSEDES 09-04-25A	23531

24472 RADIO; HT PROP W/ ENGINE CNTRLS, E-STOP, & HORN

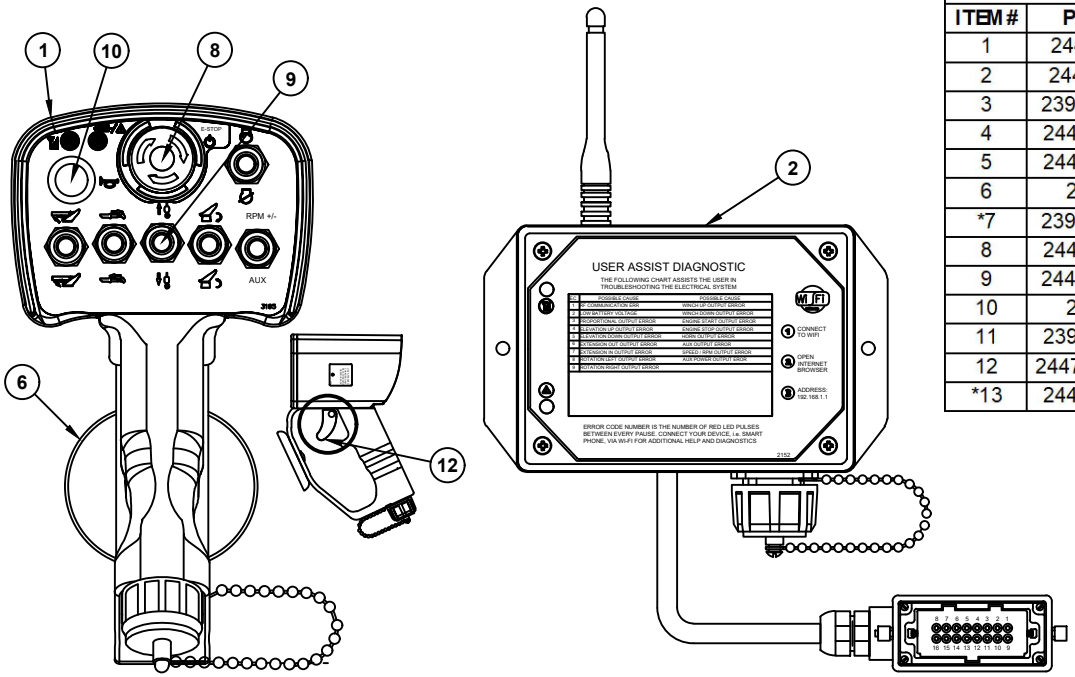

24472 RADIO SYSTEM REPLACEMENT PARTS		
ITEM #	PART#	DESCRIPTION
1	24472-TX	RADIO TRANSMITTER (900 MHZ)
2	24471-RX	RADIO RECEIVER; 16 OUTPUT DRIVERS (900MHZ)
3	23908-CHG	CHARGER, TRANSMITTER, 12V CIG / AUX PLUG
4	24470-CCR	CAN CHARGER RECEPTACLE
5	24470-CRC	TRANSMITTER CAN PORT CAP
6	22089	MAGNET ASSEMBLY
*7	23908-CAN	CAN CABLE - 25 FT
8	24470-ESS	EMERGENCY STOP SWITCH
9	24470-TOG	TOGGLE SWITCH (ON)-OFF-(ON), SCREW CONNECT TERMS, W/BOOT & HARDWARE
10	22155	PUSH BUTTON SWITCH, GREEN
11	23908-BAT	BATTERY ; TX
12	24471-TRGA	TRIGGER ASSEMBLY
*13	24470-ADP	110 VOLT A/C WALL CHARGER

*OPTIONAL ACCESSORY, NOT INCLUDED

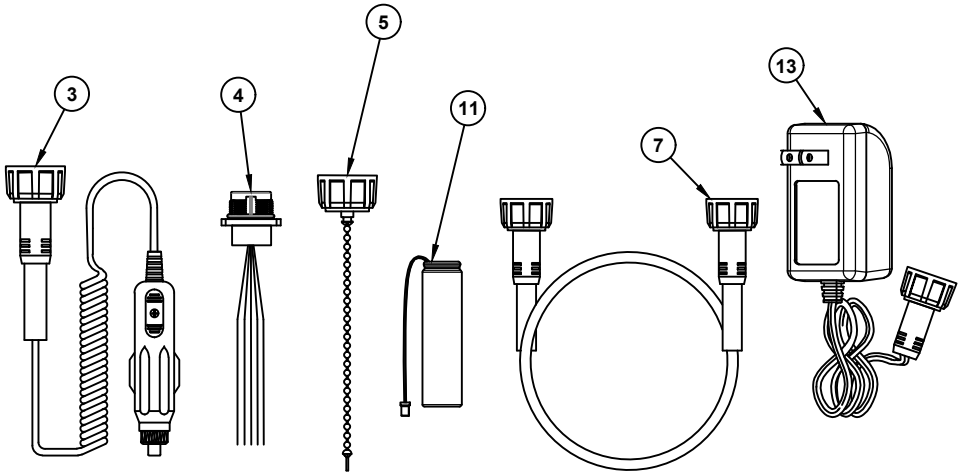

VIEW FROM CONNECTING FACE

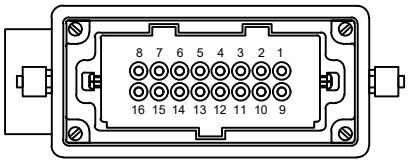

16 PIN CONNECTOR WIRING		
PIN#	WIRE COLOR	FUNCTION
1	YELLOW / BLACK	WINCH UP 12V OUTPUT
2	ORANGE / BLACK	BOOM CCW ROTATION 12V OUTPUT
3	ORANGE	BOOM ELEVATION UP 12V OUTPUT
4	BROWN	BOOM EXTENSION 12V OUTPUT
5	BLACK / RED	ENGINE START 12V OUTPUT
6	BROWN / RED	ENGINE RPM 12V OUTPUT
7	BLUE	PROPORTIONAL OUTPUT
8	RED / BLUE	AUX +12V OUTPUT
9	BROWN / BLACK	WINCH DOWN 12V OUTPUT
10	BLUE / BLACK	BOOM ROTATION RIGHT 12V OUTPUT
11	YELLOW	BOOM ELEVATION LOWER 12V OUTPUT
12	RED / BLACK	BOOM RETRACT 12V OUTPUT
13	BLUE / RED	ENGINE STOP 12V OUTPUT
14	YELLOW / RED	AUX POWER 12V OUTPUT
15	ORANGE / RED	HORN 12V OUTPUT
16	RED	SYSTEM POWER +9-30V
-	BLACK	SYSTEM GROUND (SHELL / HOUSING)

VENTURO®

VENCO VENTURO LLC
CINCINNATI, OHIO

TITLE	DATE	SECTION
REPLACEMENT PARTS DWG & LIST	07-16-26	C400
HT PROPORTIONAL SERIES CRANES	SUPERSEDES -	35330

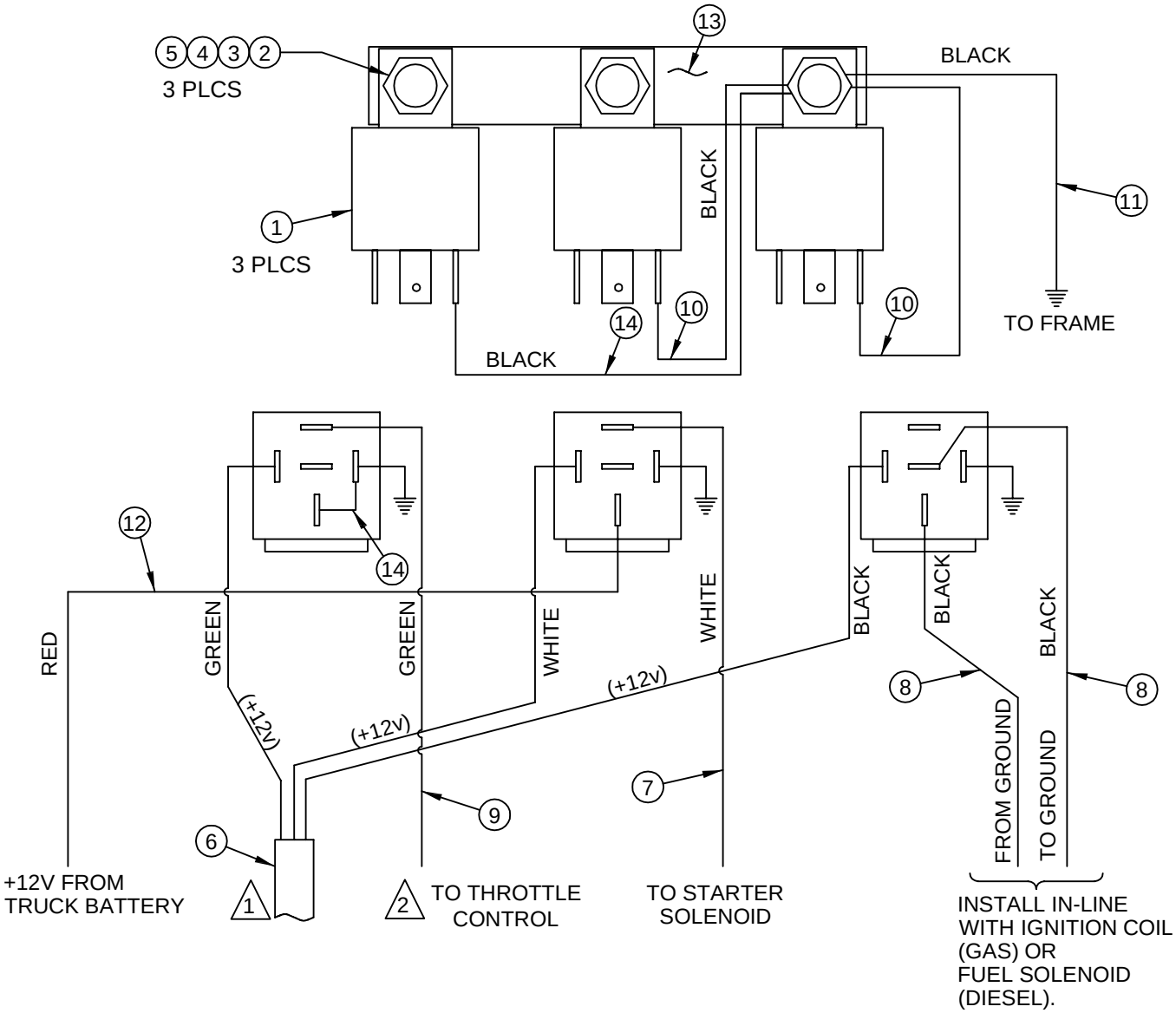

1 USER-CONTROLLED +12V INPUT SIGNALS FROM HETRONIC VLC SYSTEM OR ANALOG PENDANT OR RADIO SYSTEM

2 THROTTLE CONTROL IS DESIGNED TO PROVIDE A GROUND SIGNAL WHEN RELAY IS ACTIVATED

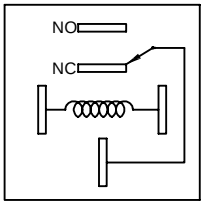

RELAY SCHEMATIC

ITEM	QTY	PART#	DESCRIPTION
1	3	22739	RELAY
2	3	!PHCS#1024075	#10-24 X 3/4 PHIL PAN HD BOLT
3	3	!LWSH-#10	#10 LOCKWASHER
4	3	!FWSH-025	#10 WASHER
5	3	!HNUT-#1024	#10 NUT
6	1	22607	WIRE HARNESS - 12/3 SJO
7	1	22609	WHITE - 16 GAGE ELECTRICAL WIRE - 15 FEET LONG
8	2	22610	BLACK - 16 GAGE ELECTRICAL WIRE - 15 FEET LONG
9	1	22611	GREEN - 16 GAGE ELECTRICAL WIRE - 15 FEET LONG
10	2	22612	BLACK - 16 GAGE ELECTRICAL WIRE - 6 INCHES LONG
11	1	22613	BLACK - 16 GAGE ELECTRICAL WIRE - 8 FEET LONG
12	1	22614	RED - 14 GAGE ELECTRICAL WIRE - 15 FEET LONG
13	1	01181	BUSS BAR
14	1	22619	BLACK - 16GA WIRE ASSY - 6" LONG W/ 3 INCH PIGTAIL

VENTURO®

VENCO VENTURO INDUSTRIES LLC
CINCINNATI, OHIO

TITLE	DATE	SECTION
ENGINE START / STOP THROTTLE CONTROL	06-09-20F	C400
HT CRANES	SUPERSEDES 02-21-14E	22615

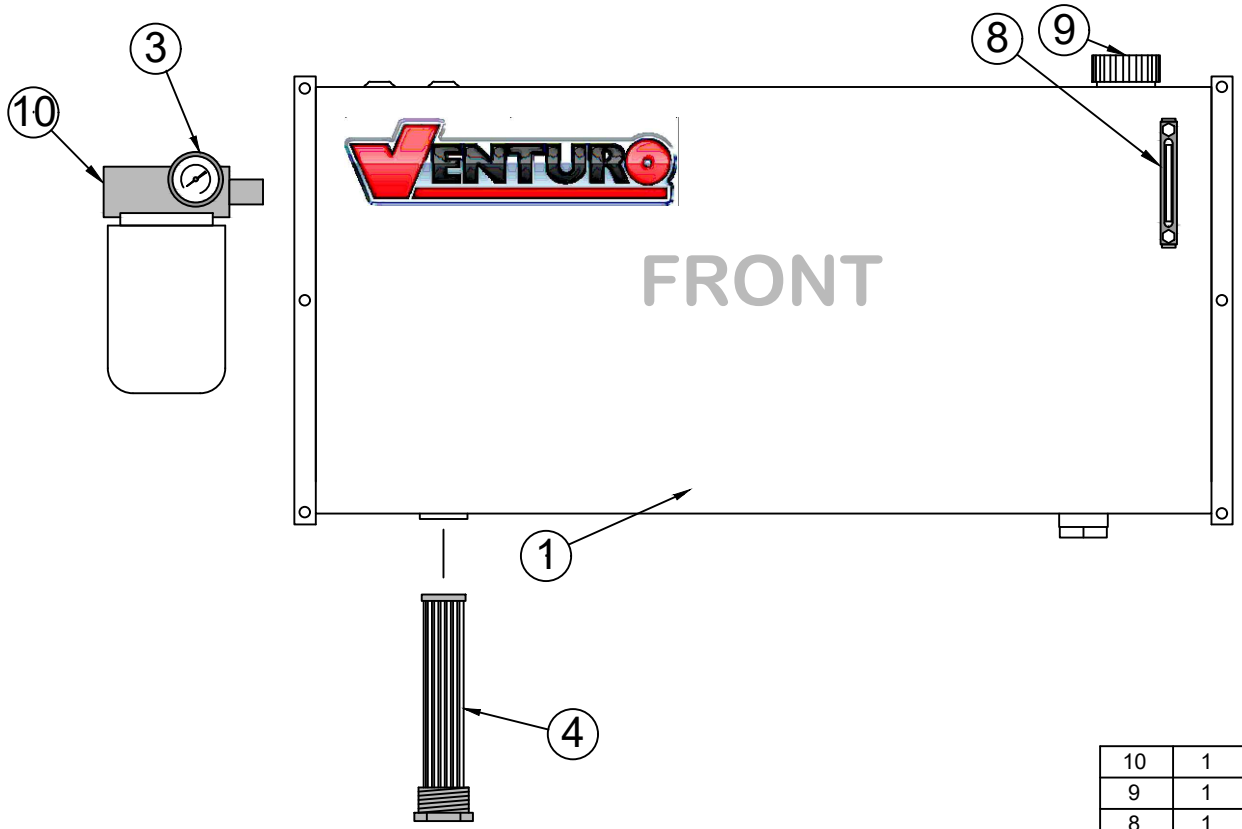

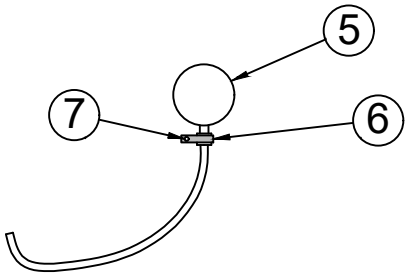

ITEM	QTY	PART NUMBERS	DESCRIPTION
10	1	19298	FILTER ASSY, RETURN
9	1	22789	FILLER / BREATHER CAP ASSEMBLY
8	1	22787	SIGHT GLASS
7	1	!HWHS02520075-F	HEX WASHER HEAD 1/4-20 X 3/4 SELF TAPPING
6	1	19275	CLAMP
5	1	22730	PRESSURE GAUGE ASSEMBLY
4	1	22788	SUCTION SCREEN - 100 MESH
▲ 3	1	VT1185	PRESSURE GAUGE - RETURN
2	-	-	-
* 1	1	22785	HYDRAULIC RESERVOIR - 25 GAL (18" x 40" x 8")
		22998	HYDRAULIC RESERVOIR - 40 GAL (20" x 42" x 11")

VENTURO®

VENCO VENTURO INDUSTRIES LLC
CINCINNATI, OHIO

TITLE	DATE	SECTION
RESERVOIR KIT REPL PARTS	04-07-26E	C400
▲ HT CRANES; 25/40/50 GAL RESERVOIR	SUPERSEDES 12-09-22D	23224

	BOOM CAPACITY DECALS				
	HT40KX		HT50KX		
	20' BOOM	25' BOOM	20' BOOM	25' BOOM	30' BOOM ▲
RIGHT	22342-1	23064	22352-1	22877-1	24092
LEFT	22342-2	23065	22352-2	22877-2	24091

MODEL NAME DECALS	
HT40KX	HT50KX
28523 (2)	28520 (2)

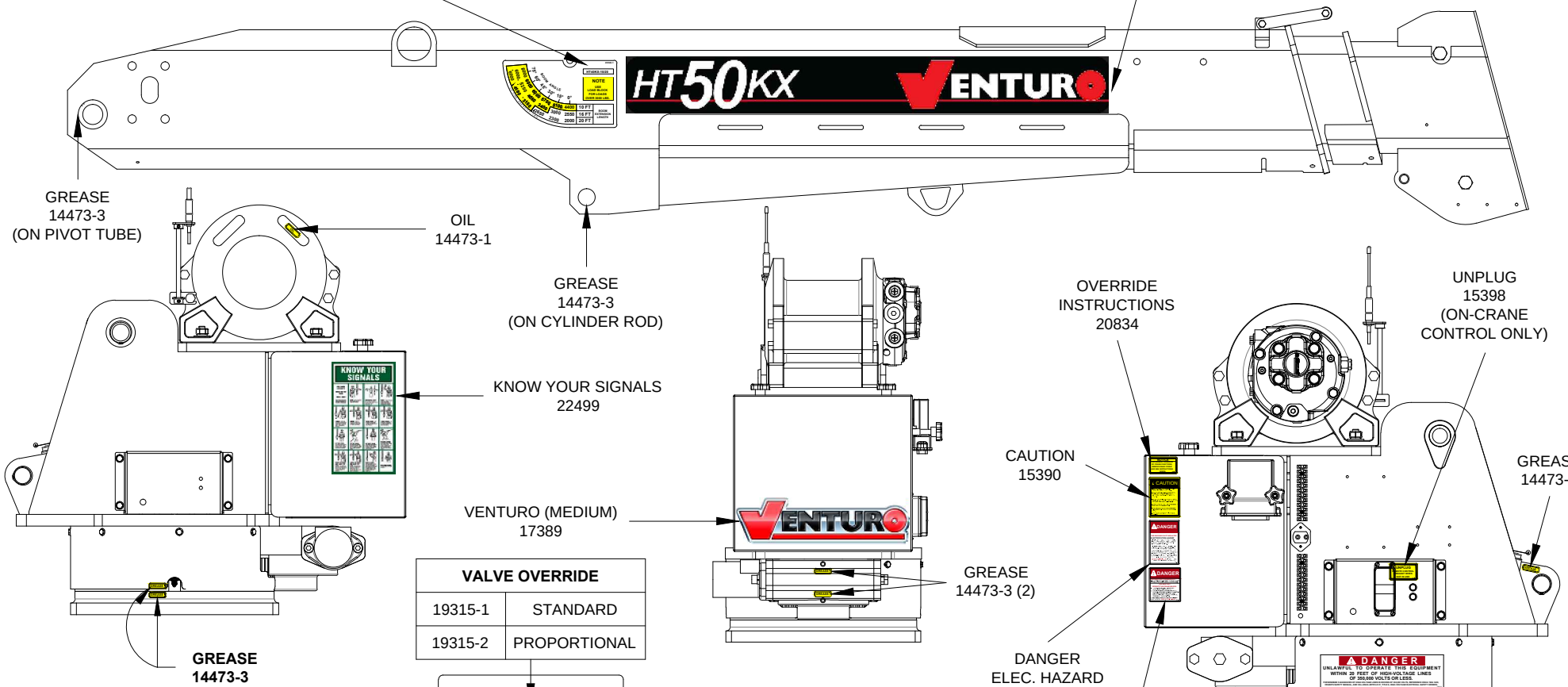

VALVE OVERRIDE	
19315-1	STANDARD
19315-2	PROPORTIONAL

MANUAL OVERRIDE (LEFT)	
19314-1	STANDARD
22768-1	PROPORTIONAL

MANUAL OVERRIDE (RIGHT)	
19314-2	STANDARD
22768-2	PROPORTIONAL

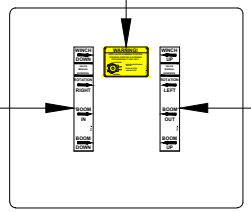

INSIDE THE REAR COVER

VENTURO®

VENCO VENTURO INDUSTRIES LLC
CINCINNATI, OHIO

TITLE	DATE	SECTION
DECAL PLACEMENTS	08-15-24A	C400
HT40/50KX SERIES	SUPERSEDES 06-16-23	28522

HT50KX FIELD SERVICE LABEL KITS

▲

-20-N (STANDARD 20')	-20-P (PROPORTIONAL 20')	-25-N (STANDARD 25')	-25-P (PROPORTIONAL 25')	-30-P (PROPORTIONAL 30')	22924 FIELD SERVICE LABEL KITS FOR HT50KX SERIES	
QUANTITY					PART #	DESCRIPTION
2	2	2	2	2	28520	DECAL; MODEL HT50KX
1	1	1	1	1	17389	DECAL; VENTURO LOGO, MEDIUM
1	1	-	-	-	22352-1	DECAL; BOOM CAPACITY, HT50KX, 10'/16'/20', RIGHT
1	1	-	-	-	22352-2	DECAL; BOOM CAPACITY, HT50KX, 10'/16'/20', LEFT
-	-	1	1	-	22877-1	DECAL; BOOM CAPACITY, HT50KX, 12'/18.5'/25', RIGHT
-	-	1	1	-	22877-2	DECAL; BOOM CAPACITY, HT50KX, 12'/18.5'/25', LEFT
-	-	-	-	1	24092	DECAL; BOOM CAPACITY, HT50KX, 13'/22'/30', RIGHT
-	-	-	-	1	24091	DECAL; BOOM CAPACITY, HT50KX, 13'/22'/30', LEFT
1	1	1	1	1	14473-1	DECAL; OIL
7	7	7	7	7	14473-2	DECAL; GREASE
1	1	1	1	1	17813	DECAL; OVERLOAD SENSING SYSTEM
1	1	1	1	1	14459	DECAL; OVERLOAD ALARM SYSTEM (OPTIONAL PART)
1	1	1	1	1	22499	DECAL; KNOW YOUR SIGNALS
1	1	1	1	1	20834	DECAL; MANUAL OVERRIDE, INSTRUCTIONS
1	-	1	-	-	19315-1	DECAL; MANUAL OVERRIDE, SHUTOFF, STANDARD
-	1	-	1	1	19315-2	DECAL; MANUAL OVERRIDE, SHUTOFF, PROPORTIONAL
1	-	1	-	-	19314-1	DECAL; MANUAL OVERRIDE, STANDARD, LEFT
1	-	1	-	-	19314-2	DECAL; MANUAL OVERRIDE, STANDARD, RIGHT
-	1	-	1	1	22768-1	DECAL; MANUAL OVERRIDE, PROPORTIONAL, LEFT
-	1	-	1	1	22768-2	DECAL; MANUAL OVERRIDE, PROPORTIONAL, RIGHT
1	1	1	1	1	22926	IDWG; FIELD SERVICE LABEL KITS, HT50KX
1	1	1	1	1	28522	IDWG; DECAL PLACEMENTS, HT40/50KX, GEN B & UP
1	1	1	1	1	INST-23233	SAFETY MANUAL, VENTURO CRANES
1	1	1	1	1	15397	KIT; ACCIDENT PREVENTION SIGNS

USER NOTES

VENTURO CRANES LIMITED WARRANTY POLICY

Venturo products are built to last…we guarantee them.
As a purchaser of any new Venturo product covered by warranty, you will receive 1 year of the most complete coverage available…and, at no added cost to you.

1-Year Limited Warranty Policy

This limited policy warrants new products of Venturo to be free from defects in material and workmanship for a period of one (1) year from date of original installation. OEM products or accessories purchased by Venturo as part of or offered with our product will carry the OEM manufacturer's respective warranty. Our warranty covers:

- ***Repair or replacement of product***
- ***Labor to repair or replace product***
- ***Freight to return and/or replace product***

We shall not be liable for any contingent liabilities arising out of the improper function of any products. Warranty shall become void if the product is improperly installed, modified, damaged, abused or used for application other than intended use. There is no warranty of merchantability, fitness for a particular purpose, warranty arising from course of dealing or usage of trade, or any other implied or expressed warranty, except as made specifically herein. This warranty supersedes all previous warranties, written or implied.

Warranty Claims

Venco Venturo Industries LLC will make a good faith effort for prompt correction or other adjustment with respect to any product, which proves to be defective after our inspection and within the warranty period. Before any repairs are attempted or before returning any product, your Venturo Distributor is required to obtain a warranty claim number. This number is necessary for any claim to be considered. To obtain a warranty claim number, Venturo requires the model and serial number. Only authorized Venturo Distributors can perform warranty. For the name and address of your local Venturo Distributor call the **Warranty Claim Department - 513-772-8448.**

WARNING - It is the responsibility of the installer to ensure the installation is completed according to the manufacturer's recommendations, ensure the ultimate user understands how to operate product in a safe manner, and understands the need for regular service and maintenance by an authorized Venturo Distributor. No modifications or alterations may be made to any Venturo product without the expressed written consent of Venco Venturo Industries LLC. Installation of any Venturo product must be done by an authorized Venturo Distributor, to the standards of the industry; including maintenance, service and affixing of all instruction, safety and warning decals. Users should be instructed as to the safe operation at time of delivery. Maintenance, service, operation and safety warning decals are available on request from Venco Venturo Industries LLC.

VENCO VENTURO INDUSTRIES LLC
12110 BEST PLACE | CINCINNATI, OHIO 45241
P: 800-226-2238 | F: 513-326-5427
www.venturo.com