D1

INST-26982

OWNER'S MANUAL

HMBABC-V0A0

Pages 1-64

PARTS & INSTALLATION MANUAL

HT30KX-25

Included in this manual:

HT30KX-25 (VLC)

- 5,000 lb Hydraulic Telescopic Service Crane
- Venturo Logic Control System w/ Proportional Control
- 25 ft Fully-Powered, Two-Stage, Boom Extension

VENCO VENTURO INDUSTRIES LLC
12110 BEST PLACE | CINCINNATI, OHIO 45241
800-226-2238

This manual also available online at www.venturo.com.

HT30-25' VLC

INST-26982 - 10/8/2026 (Rev: D1)

7607100A	DESCRIPTION & SPECIFICATIONS
24445	SPECIFICATIONS & OPERATING FEATURES
24880	INSTALLATION DIMENSIONS
24302	BASE MOUNTING DIMENSIONS
24894	MAXIMUM LOAD CAPACITY CHART
7607150A	SAFETY
15394	VEHICLE & CRANE ELECTRICAL HAZARD INFORMATION
920612	SAFETY & HAZARDS, GENERAL
19217	WINCH SAFETY WARNINGS
24304	DECALS; DRAWING & LIST
24370	DECALS; DRAWING & LIST
24306	DECALS; DRAWING & LIST
24371	DECALS; DRAWING & LIST
24308	DECALS; BOOM CAPACITY
7607200A	INSTALLATION
26966	CRANE INSTALLATION, PG. 1
24311	CRANE INSTALLATION PG. 2
23753	CRANE OPERATION & MAINTENANCE INSTRUCTIONS (PAGE 1 OF 3)
23754	CRANE OPERATION & MAINTENANCE INSTRUCTIONS (PAGE 2 OF 3)
23755	CRANE OPERATION & MAINTENANCE INSTRUCTIONS (PAGE 3 OF 3)
24315	EXPLANATION OF HYDRAULIC VALVE SYSTEM
23532	ROTATION STOP LOCATION
20906-3025V	STABILITY PROCEDURE
20907	STABILITY CHART
24316	HYDRAULIC COMPONENT INSTALLATION
23015	CONNECTIONS GUIDE (PAGE 1 OF 2)
23014	CONNECTIONS GUIDE (PAGE 2 OF 2)
22913	CONNECTIONS GUIDE (PAGE 3 OF 3)
22245	WIRE ROPE INSTALLATION
7607300A	MAINTENANCE & SERVICE
21956	LUBE & MAINTENANCE
23203	MAINTENACE OVERVIEW INFORMATION
23920	WIRE ROPE & HOOK SPECIFICATIONS
7607400A	REPLACEMENT PARTS
26967	REPLACEMENT PARTS DRAWING; MECHANISM
26968	REPLACEMENT PARTS LIST; MECHANISM
26969	REPLACEMENT FASTENER DRAWING; MECHANISM
26970	REPLACEMENT FASTENER LIST; MECHANISM
26975	REPLACEMENT PARTS DRAWING; 26573 BOOM
26976	REPLACEMENT PARTS LIST; 26573 BOOM
26977	REPLACEMENT FASTENER DRAWING; 26573 BOOM
26978	REPLACEMENT FASTENER LIST; 26573 BOOM
26942	REPLACEMENT PARTS LIST; A2B
28239	A2B STOWAGE CUT-OUT
21379	REPLACEMENT PARTS DIAGRAM; 19814 WINCH
26979	REPLACEMENT PARTS DRAWING; HYDRAULIC COMPONENTS
26980	REPLACEMENT PARTS LIST; HYDRAULIC COMPONENTS
22939	REPLACEMENT PARTS DIAGRAM; 22501 HYDRAULIC VALVE MANIFOLD
28188	WORK LIGHT INSTALLATION INSTRUCTIONS; COMPACT A2B MOUNT
24328	WIRING DIAGRAM; VLC-H, PG. 1
24329	WIRING DIAGRAM; VLC-H, PG. 2
26963	WIRING DIAGRAM; VLC-K, PG. 1
26732	WIRING DIAGRAM; VLC-K, PG. 2
24330	HYDRAULIC SYSTEM DIAGRAM
22615	ENGINE START/STOP/THROTTLE CONTROLS
23224	RESERVOIR KIT; REPLACEMENT PARTS DRAWING & LIST
24374	DECAL PLACEMENT
24376	24350-** FIELD SERVICE LABEL KIT
12-00073_VNT1	WARRANTY PAGE

SECTION 100

DESCRIPTION

&

SPECIFICATIONS

VENCO VENTURO INDUSTRIES LLC
CINCINNATI, OHIO

SPECIFICATIONS

PTO-driven hydraulic system

12-volt electrical controls (e.g. valve coils)

30,000 ft-lb overturning moment (or as limited by truck stability)

Venturo Logic Controls (VLC) crane control management system

Hydraulic winch - 2,500 lb single-line capacity with automatic load brake

Hydraulic boom elevation

Hydraulic boom extension

Hydraulic 400° rotation

VLC radio remote control pendant

In-compartment electrical control panel (optional)

Accessories (optional):

- Stabilizers: 24962, 13500, 11822-2
- Pedestal: 17576
- Boom Rest: 20381-2

TELESCOPIC BOOM	11.8 - 25.1 ft
BOOM ELEVATION	-5° TO 75°
BOOM HYD EXTENSION	13 ft
BOOM MANUAL EXT	-
CAPACITY	1100 lb @ 25.0 ft
	5000 lb @ 6.0 ft
WIRE ROPE	5/16" x 100 ft
PENDANT CORD LENGTH	25 ft

⚠ WARNING

- These products are not passenger lifts. They are not designed or intended to be used to lift, support, or otherwise transport personnel.

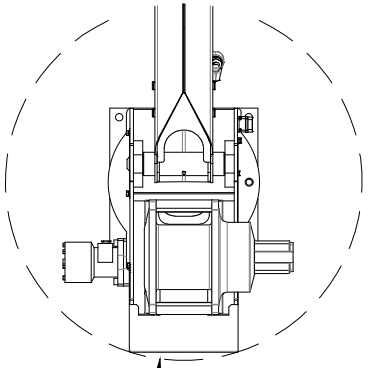

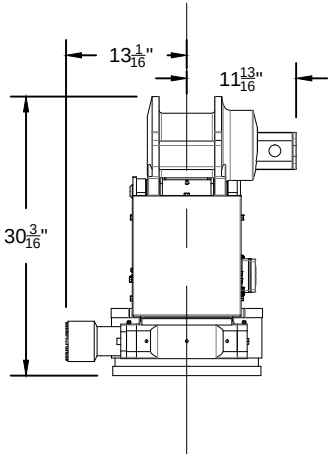

CENTER OF ROTATION

THIS SECTION SCALED 2:1 FOR CLARITY

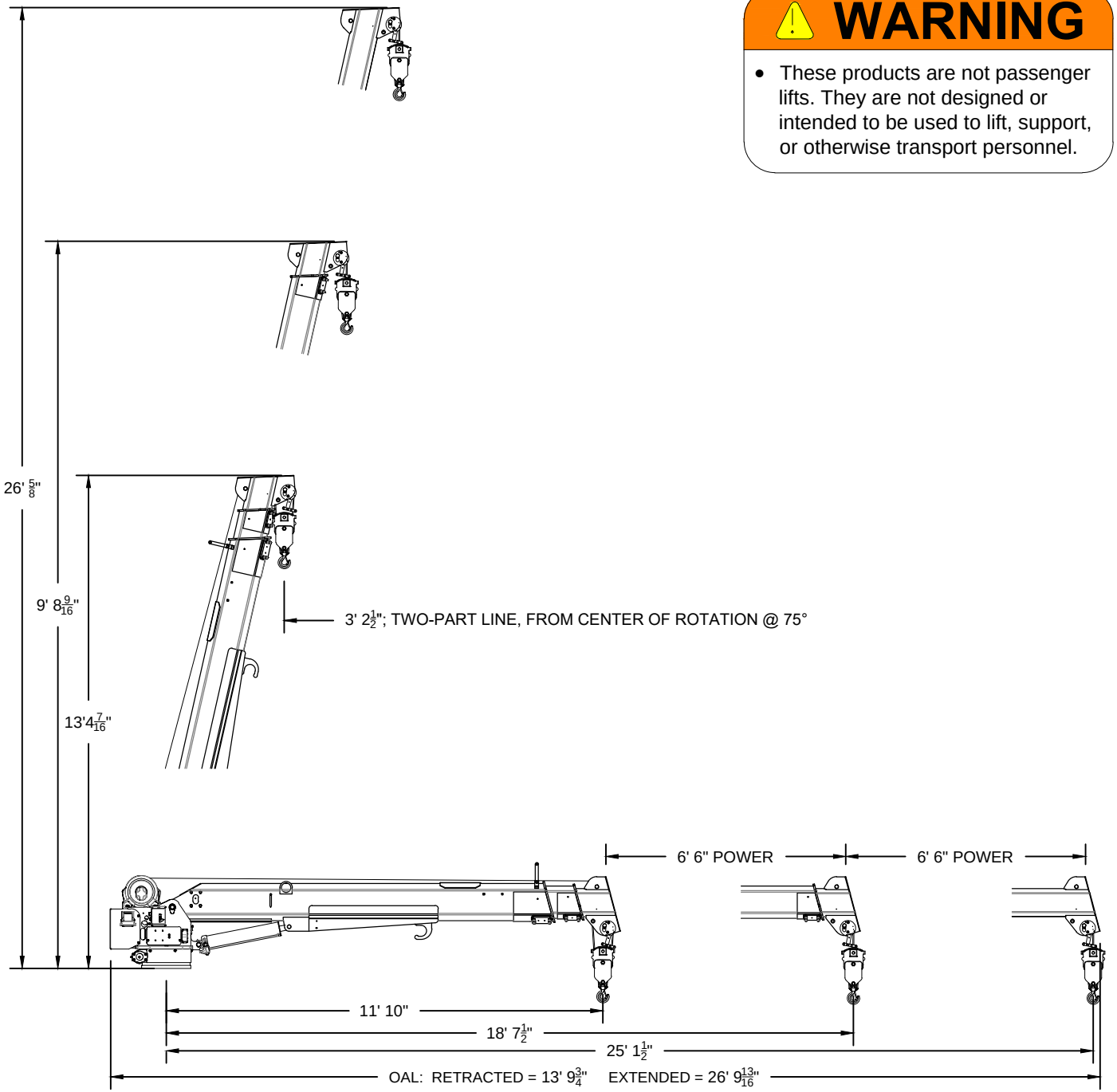

VENTURO® VENCO VENTURO INDUSTRIES LLC CINCINNATI, OHIO	TITLE INSTALLATION DIMENSIONS	DATE 10-08-24A	SECTION C100
	HT25/30-25' VLC CRANES	SUPERSEDES 05-19-20	24880

BASE MOUNTING DIMENSIONS; ET25-36 & HT25/30 SERIES

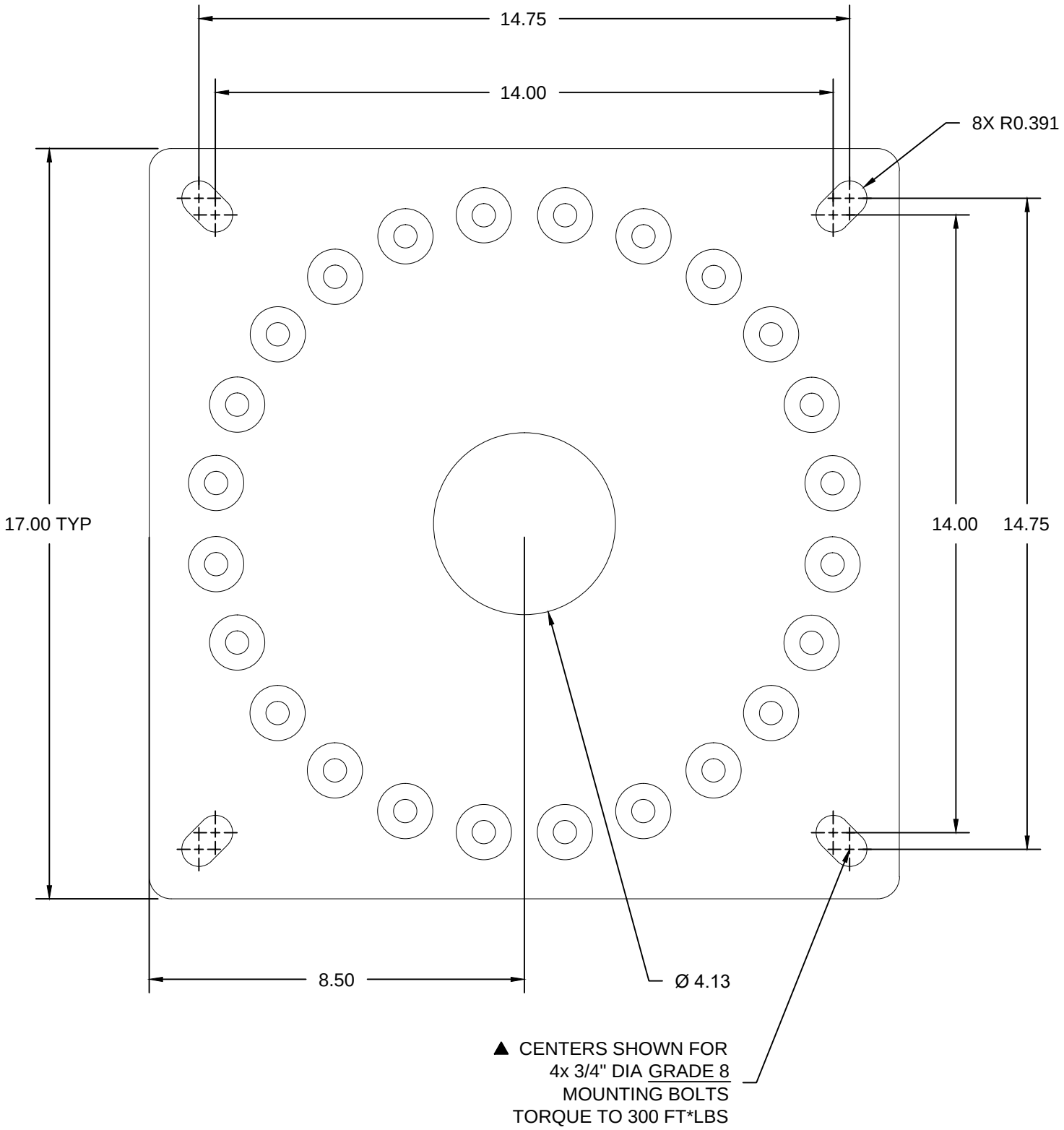

VENTURO®

VENCO VENTURO INDUSTRIES LLC
CINCINNATI, OHIO

TITLE	DATE	SECTION
BASE MOUNTING DIMS	01-29-25B	C100
ET25-36 & HT25/30 SERIES	SUPERSEDES 10-07-24A	24302

HT30KX VLC, 12' - 18.5' - 25' BOOM, WITH VENTURO LOGIC CONTROL SYSTEM

CRANE SERIAL NUMBER: _____

MAXIMUM LOAD CAPACITY CHART

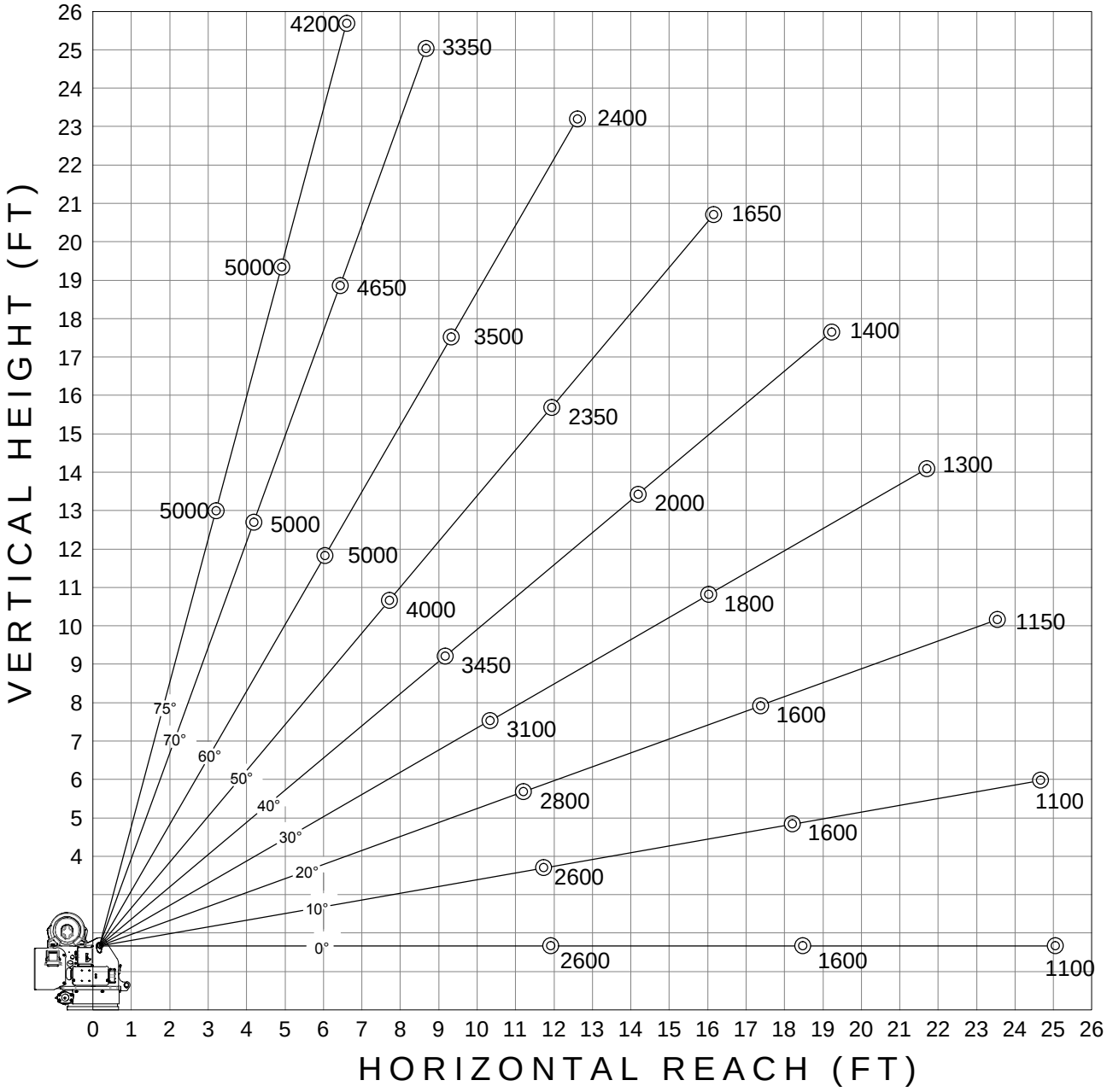

WEIGHT OF LOAD HANDLING DEVICES ARE PART OF THE LOAD AND MUST BE DEDUCTED FROM THE GROSS CAPACITY.

LOAD BLOCK USAGE

1-PART LINE FOR LOADS LESS THAN 2500 LBS

2-PART LINE FOR LOADS OF 2500 LBS AND GREATER

WEIGHT OF LOAD BLOCK = 34 LBS

VENTURO® VENCO VENTURO INDUSTRIES LLC CINCINNATI, OHIO	TITLE MAX. LOAD CAPACITY	DATE 07-15-20A	SECTION C100
	HT30-25' VLC CRANES	SUPERSEDES 06-04-20	24894

SECTION 150

SAFETY

VENCO VENTURO INDUSTRIES LLC
CINCINNATI, OHIO

7607150A

VEHICLE & CRANE MOUNTED ELECTRICAL HAZARD SIGN APPLICATION & INFORMATION

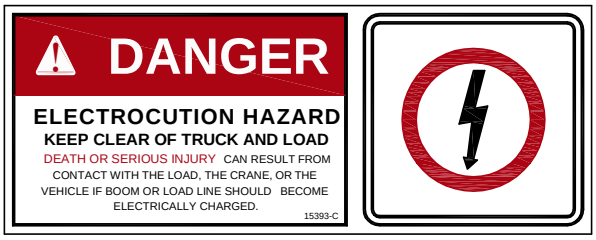

SIGN NO. 15393 DISPLAYS THE INTERNATIONAL SYMBOL FOR ELECTRICITY AND WARNS OF DANGER FROM AN ELECTRICALLY CHARGED VEHICLE, CRANE, OR LOAD. FOUR ARE RECOMMENDED (ONE FOR EACH SIDE AND ONE FOR EACH END OF VEHICLE) TO BE APPLIED IN LOCATIONS WHICH ARE READILY VISIBLE TO GROUND PERSONNEL.

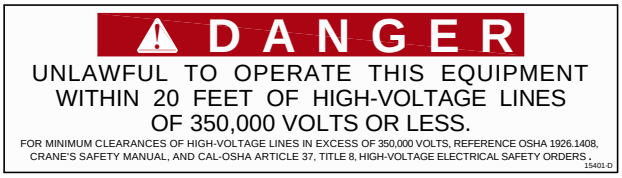

SIGN NO. 15401 PROVIDES ADDITIONAL WARNING OF LEGAL REQUIREMENTS WHEN OPERATING NEAR HIGH VOLTAGE LINES. THIS SIGN IS PLACED ON THE CONTROL PENDANT SIDE OF BOOM.

Table A - Minimum Clearance Distances

Voltage (nominal, kV, alternating current)	Minimum clearance distance (feet) *
Up to 50	10
over 50 - 200	15
over 200 - 350	20
over 350 - 500	25
over 500 - 750	35
over 750 - 1000	45
Over 1000	(as established by the utility owner/operator or registered professional engineer who is a qualified person with respect to electrical power transmission and distribution).

Table T - Minimum Clearance Distances While Traveling With No Load

Voltage (nominal, kV, alternating current)	While traveling - minimum clearance distance (feet) *
0 - 0.75	4
over 0.75 - 50	6
over 50 - 345	10
over 345 - 750	16
over 750 - 1000	20
Over 1000	(as established by the utility owner/operator or registered professional engineer who is a qualified person with respect to electrical power transmission and distribution).

* NOTE: ENVIRONMENTAL CONDITIONS SUCH AS FOG, SMOKE, OR PRECIPITATION MAY REQUIRE INCREASED CLEARANCES

CRANE SAFETY AND HAZARDS
HT SERIES CRANES

CAUTIONS

1. INSPECT VEHICLE AND CRANE, INCLUDING OPERATION, PRIOR TO USE DAILY.
2. DO NOT USE THIS EQUIPMENT EXCEPT ON SOLID, LEVEL SURFACE WITH CRANE MOUNTED ON FACTORY-RECOMMENDED TRUCK.
3. BEFORE OPERATING THE CRANE, REFER TO MAXIMUM LOAD (CAPACITY) CHART ON CRANE FOR OPERATING (LOAD) LIMITATIONS.
4. DO NOT OPERATE, WALK, OR STAND BENEATH BOOM OR A SUSPENDED LOAD.
5. ATTACH PENDANT CORD SUPPORT SNAP TO ATTACHMENT POINT BEFORE PLUGGING IN PENDANT.
6. UNPLUG PENDANT AND DISENGAGE PTO SYSTEM WHEN CRANE NOT IN USE.
7. FOR TRAVEL, BOOM MUST BE IN STOWED POSITION.

DANGER

- THIS CRANE IS NOT A PASSENGER LIFT
- IT IS NOT DESIGNED OR INTENDED TO BE USED TO LIFT, SUPPORT, OR OTHERWISE TRANSPORT PERSONNEL.

YOU MUST NOT OPERATE THIS CRANE UNLESS

1. YOU HAVE BEEN TRAINED IN THE SAFE OPERATION OF THIS CRANE
   AND
2. YOU KNOW AND FOLLOW THE SAFETY AND OPERATING RECOMMENDATIONS CONTAINED IN THE MANUFACTURER'S MANUALS, YOUR EMPLOYER'S WORK RULES, AND APPLICABLE GOVERNMENT REGULATIONS. AN UNTRAINED OPERATOR SUBJECTS HIMSELF AND OTHERS TO DEATH OR SERIOUS INJURY.

ELECTROCUTION HAZARD

- THIS MACHINE IS NOT INSULATED.
- MAINTAIN SAFE CLEARANCES FROM ELECTRICAL LINES AND APPARATUS.
- YOU MUST ALLOW FOR BOOM SWAY, ROCK OR SAG, AND ELECTRICAL LINE AND LOADLINE SWAYING.
- THIS LIFTING DEVICE DOES NOT PROVIDE PROTECTION FROM CONTACT WITH OR PROXIMITY TO AN ELECTRICALLY CHARGED CONDUCTOR.
- YOU MUST MAINTAIN A CLEARANCE OF AT LEAST 20 FEET BETWEEN ANY PART OF THE CRANE, LOADLINE, OR LOAD, AND ANY ELECTRICAL LINE OR APPARATUS CARRYING UP TO 350 kV (SEE NEW CHART). ADDITIONAL CLEARANCES ARE REQUIRED FOR VOLTAGES IN EXCESS OF 50,000 VOLTS. REFER TO DRAWING 15394 FOR ADDITIONAL INFORMATION.
- **DEATH OR SERIOUS INJURY** WILL RESULT FROM CONTACT OR INADEQUATE CLEARANCE.

WINCH SAFETY WARNINGS

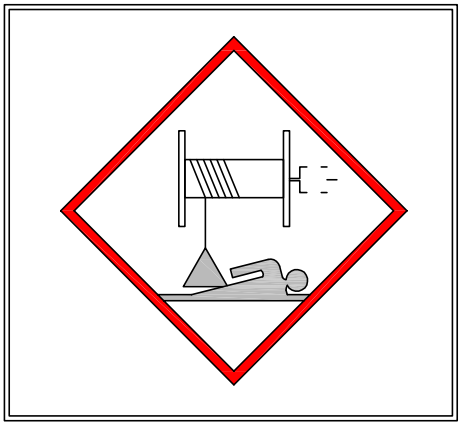

DANGER

- DO NOT DISENGAGE WINCH UNDER LOAD

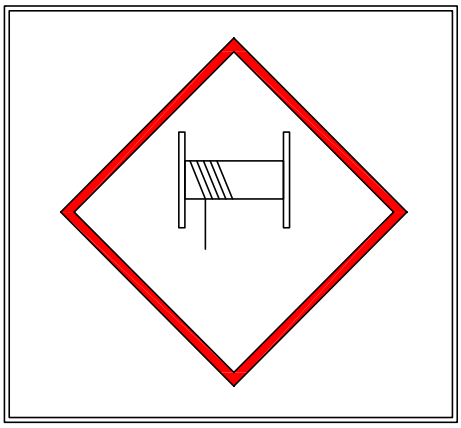

DANGER

- THE LAST [5] (DEAD) WRAPS OF WIRE ROPE MUST BE LEFT ON TO ASSIST WIRE ROPE CLAMP IN HOLDING LOAD

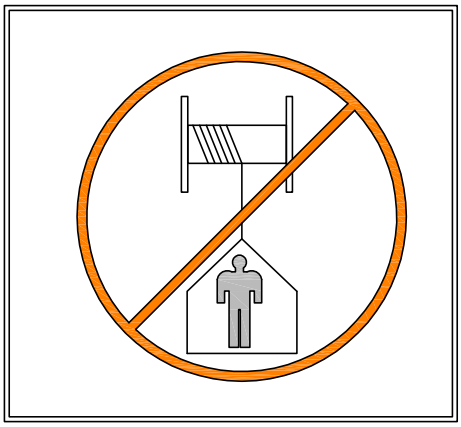

WARNING

- Winches are not to be used to lift, support, or otherwise transport personnel

PART NO.: 14473-1

DECAL: OIL

PURPOSE: TO SHOW OPERATOR WHERE TO CHECK/ADD OIL

QTY: 1

LOCATION: SIDE OF WINCH

PART NO.: 14473-2

DECAL: GREASE

PURPOSE: TO SHOW OPERATOR WHERE TO ADD GREASE

QTY: 9

LOCATION: SLEW DRIVE & BOOM PIVOTS

PART NO.: 15390

DECAL: CAUTION, INSPECT VEHICLE & CRANE

PURPOSE: TO INFORM OPERATOR OF KEY OPERATING REQUIREMENTS

QTY: 1

LOCATION: REAR COVER OR SIDE OF CRANE

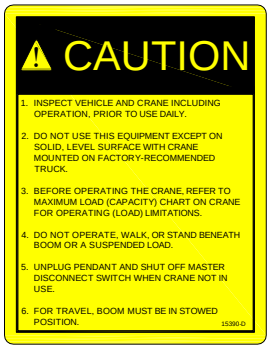

PART NO.: 15391

DECAL: DANGER, NOT A PASSENGER LIFT

PURPOSE: TO INFORM OPERATOR NOT TO LIFT, SUPPORT, OR TRANSPORT PERSONNEL, & TO ENSURE OPERATOR IS ADEQUATELY TRAINED

QTY: 1

LOCATION: REAR COVER OR SIDE OF CRANE

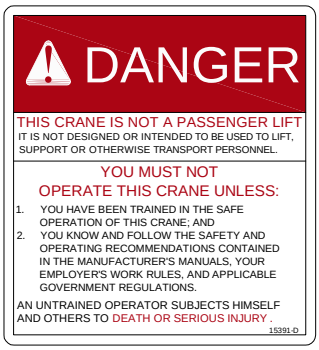

PART NO.: 15392

DECAL: DANGER, ELECTROCUTION HAZARD, MACHINE (CRANE)

PURPOSE: TO INFORM ORPERATOR THAT MACHINE (CRANE) REPRESENTS AN ELECTROCUTION HAZARD SHOULD IT COME CLOSE TO OR IN CONTACT WITH AN ELECTRICAL VOLTAGE SOURCE

QTY: 1

LOCATION: REAR COVER OR SIDE OF CRANE

VENTURO® VENCO VENTURO INDUSTRIES LLC CINCINNATI, OHIO	TITLE DECAL DWG & LIST	DATE 06-17-19	SECTION C150
	HT25/30 VLC CRANES	SUPERSEDES -	24304

PART NO.: 15393

DECAL: DANGER, ELECTROCUTION HAZARD, VEHICLE (TRUCK)

PURPOSE: WARNS OF DANGER FROM ELECTRICALLY CHARGED VEHICLE, CRANE, OR LOAD

QTY: 4

LOCATION: EACH SIDE & EACH END OF VEHICLE

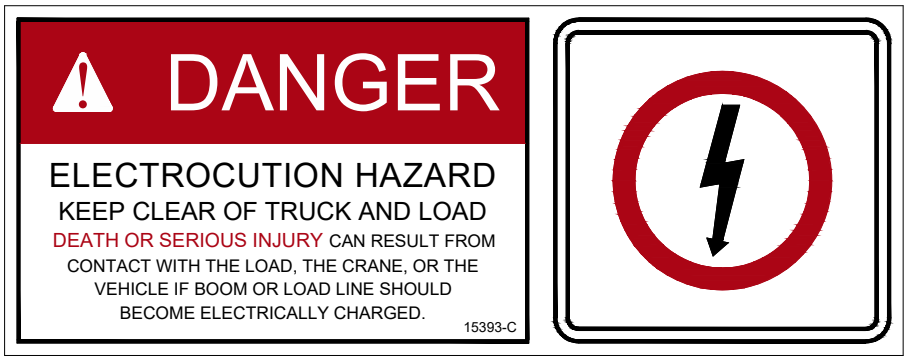

PART NO.: 15398

DECAL: UNPLUG REMOTE CONTROL

PURPOSE: TO INFORM OPERATOR TO UNPLUG REMOTE CONTROL WHEN NOT IN USE

QTY: 1

LOCATION: VICINITY OF REMOTE CONTROL SOCKET

PART NO.: 15401

DECAL: DANGER, UNLAWFUL TO OPERATE

PURPOSE: TO INFORM OPERATOR OF PROPER OPERATION IN VICINITY OF ELECTRICAL LINES

QTY: 1

LOCATION: GEAR COVER OR SIDE OF CRANE

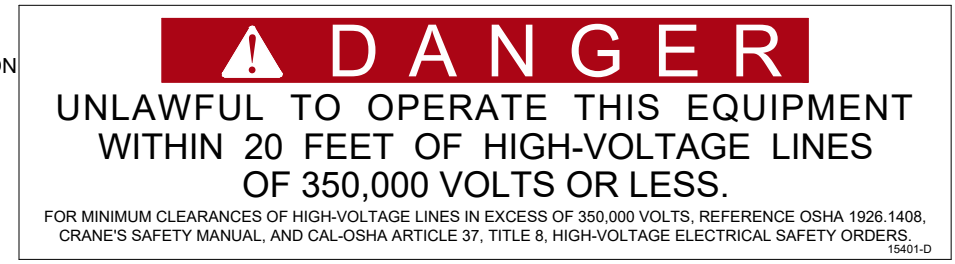

PART NO.: 15513

DECAL: MASTER DISCONNECT

PURPOSE: TO INFORM OPERATOR OF LOCATION AND OPERATION OF MASTER DISCONNECT SWITCH

QTY: 1

LOCATION: MASTER DISCONNECT SWITCH BRACKET

INTENTIONALLY LEFT BLANK

PART NO.: 17389-4

DECAL: VENTURO (2.8" x 11")

PURPOSE: TO INFORM OPERATOR THAT THEY ARE ABOUT TO OPERATE THE BEST CRANE ON THE MARKET!

QTY: 1

LOCATION: REAR COVER

PART NO.: 17813

DECAL: OVERLOAD SENSING SYSTEM

PURPOSE: TO INFORM OPERATOR OF OVERLOAD SENSING SYSTEM

QTY: 1

LOCATION: LOCATION MAY VARY

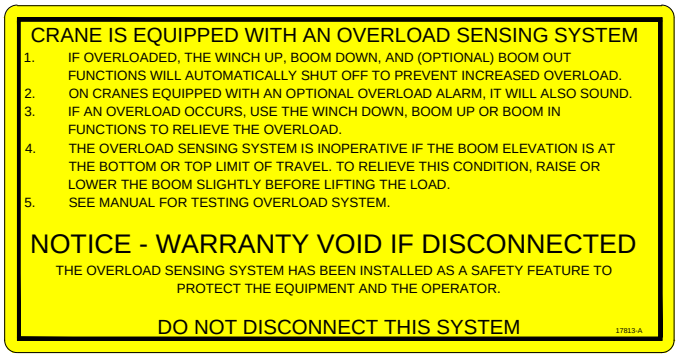

PART NO.: 19314-1 (L) & 19314-2 (R)

DECAL: MANUAL OVERRIDE

PURPOSE: TO INFORM OPERATOR OF MANUAL OVERIDE LOCATION

QTY: 1 EACH

LOCATION: LEFT & RIGHT SIDE OF REAR COVER

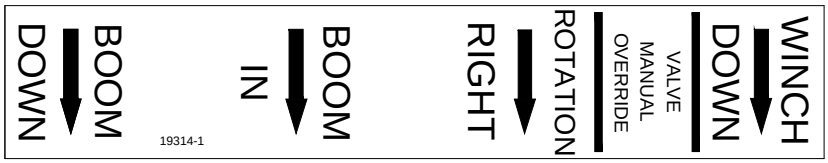

PART NO.: 19315-2

DECAL: MANUAL OVERRIDE (PROPORTIONAL)

PURPOSE: TO SHOW OPERATOR HOW TO OVERRIDE PROPORTIONAL VALVE.

QTY: 1

LOCATION: REAR COVER

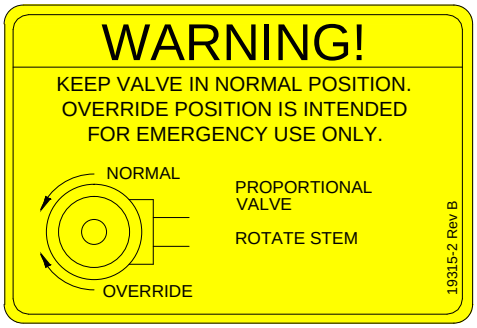

PART NO.: 20834

DECAL: MANUAL OVERRIDE NOTICE

PURPOSE: TO INFORM OPERATOR OF MANUAL OVERRIDE LOCATIONS

QTY: 1

LOCATION: REAR COVER OR SIDE OF CRANE

VENTURO® VENCO VENTURO INDUSTRIES LLC CINCINNATI, OHIO	TITLE DECAL DWG & LIST	DATE 05-19-25A	SECTION C150
	HT25/30 VLC CRANES	SUPERSEDES 06-18-19	24306

PART NO.: 20927

DECAL: CRANE STABILITY

PURPOSE: TO INFORM OPERATOR OF THE CRANE'S LIFTING CAPACITY THROUGHOUT THE ENTIRE ROTATION

QTY: 1

LOCATION: IN PROMINENT LOCATION, SO IT IS EASILY SEEN AND READILY IDENTIFIABLE

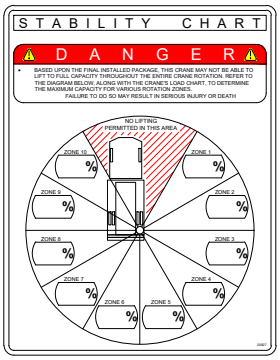

PART NO.: 22499

DECAL: KNOW YOUR SIGNALS

PURPOSE: TO INFORM OPERATOR OF PROPER SIGNALS

QTY: 1

LOCATION: LOCATION MAY VARY

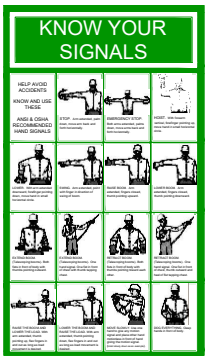

PART NO.: 23742

DECAL: VLC, 2.94" x 6.00"

PURPOSE: TO SHOW THAT CRANE IS EQUIPPED WITH VENTURO LOGIC CONTROLS

QTY: 2

LOCATION: EACH SIDE OF HOUSING

VENTURO LOGIC CONTROLS

PART NO.: 28530
DECAL: MODEL DECAL, HT25KX

PURPOSE: TO SHOW MODEL OF CRANE

QTY: 2

LOCATION: ONE ON EACH SIDE OF BOOM

HT25KX VENTURO

PART NO.: 28531

DECAL: MODEL DECAL, HT30KX

PURPOSE: TO SHOW MODEL OF CRANE

QTY: 2

LOCATION: ONE ON EACH SIDE OF BOOM

HT30KX VENTURO

VENTURO® VENCO VENTURO INDUSTRIES LLC CINCINNATI, OHIO	TITLE DECAL DWG & LIST	DATE 11-09-23	SECTION C150
	HT25/30 VLC CRANES	SUPERSEDES -	24371

PART NO.: 24335 (RIGHT) & 24336 (LEFT)

DECAL: HT25-20 VLC CRANE CAPACITY

PURPOSE: TO SHOW OPERATOR THE OPERATING CAPACITIES OF THE CRANE

QTY: 1 EACH

LOCATION: ONE ON EACH SIDE OF BOOM

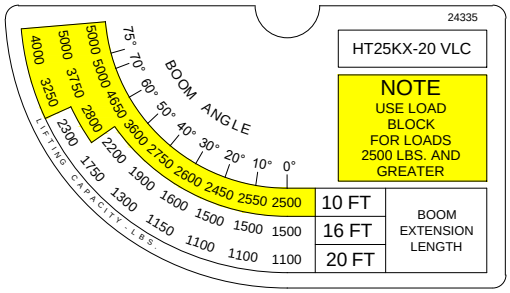

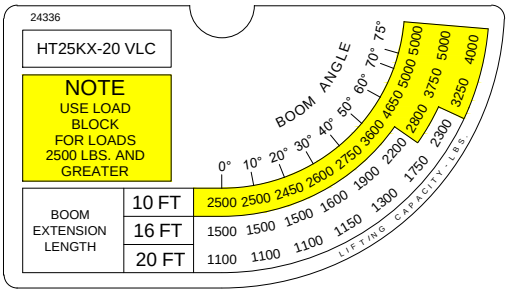

PART NO.: 24892 (RIGHT) & 24891 (LEFT)

DECAL: HT30-25 VLC CRANE CAPACITY

PURPOSE: TO SHOW OPERATOR THE OPERATING CAPACITIES OF THE CRANE

QTY: 1 EACH

LOCATION: ONE ON EACH SIDE OF BOOM

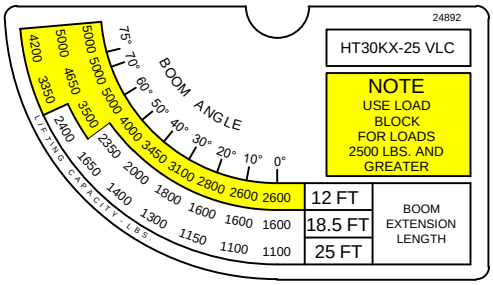

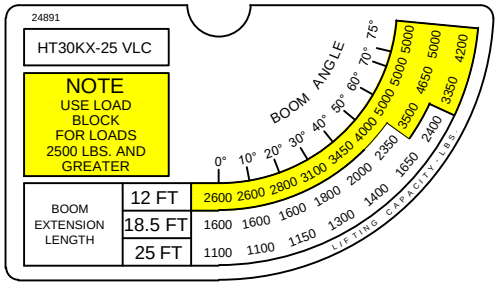

INTENTIONALLY LEFT BLANK

SECTION 200

INSTALLATION

VENCO VENTURO INDUSTRIES LLC
CINCINNATI, OHIO

7607200A

BODY REINFORCEMENT

The truck body must be reinforced and outriggers provided to withstand the combined loads resulting from lifting and the weight of the crane and boom.

The maximum combined overturning moment for the HT25KX is 28,000 ft. lbs.
The maximum combined overturning moment for the HT30KX is 33,000 ft. lbs.

The maximum vertical load for the HT25/30 VLC is 6,600 lbs.

CRANE MOUNTING

The crane base plate or mounting pedestal must be bolted to the body reinforcing plate with four [4] Grade 8 3/4"-10 bolts, torqued to 300 foot pounds. A 4" to 6" diameter hose clearance hole must be cut in this plate to allow the hoses to swing and coil freely. ▲

ROTATION POSITIONING

The HT cranes are shipped with the boom rotated as shown on drawing 20051. It can be in any position that pleases the user since the boom can always reach the storage and travel position by rotating one way or the other.

HYDRAULIC CONNECTIONS

The crane is furnished with a pressure, return and a case drain hoses that come down through the center of the housing. The pressure and return hoses connect to two hydraulic swivels to prevent damage while rotating the crane right and left.

⚠ C A U T I O N ⚠

- THE CASE DRAIN HOSE MUST BE A DEDICATED RETURN HOSE UNRESTRICTED TO TANK / RESERVOIR. DO NOT 'T' INTO ANOTHER EXISTING RETURN HOSE OR DAMAGE TO THE HYD. WINCH FROM BACK-PRESSURE WILL OCCUR. BACK-PRESSURE IN EXCESS OF 200 PSI WILL DAMAGE THE HYD. WINCH.

Arrange the pressure & return hoses in the compartment below the crane so that they are connected in a relaxed position while the crane is at the midpoint of the 400 degree rotation range -- regardless of the final position of the boom during storage/travel. See installation pages 22913 for more information on hose connections.

▲ ELECTRICAL CONNECTIONS

A 9 ft. electrical power lead - intended for 12V DC only - comes down through the center of the crane base plate along with the hoses. This power lead should be slacked in the compartment so that it remains relaxed throughout the 400 degree rotation of the crane.

A 20 amp circuit breaker is mounted on the crane and protects the crane's internal wiring and solenoid coils. The 20 amp circuit breaker does not protect the 9 ft. power lead. For added protection, the 9 ft. lead can be connected to a 20 amp protected circuit that, if possible, is powered only when the vehicle engine is running.

HYDRAULIC FLUID

Average Climate	Type of Oil
Cold to Moderate	ISO Grade AW 46
Warm to Hot	ISO Grade AW 68

The fluid should have the highest anti-wear characteristics and treated to inhibit rust and oxidation.

▲ HYDRAULIC HOSES & LINES

The minimum sizes for lines and hoses are as follows:

HYDRAULIC LINES	HT25/30 SERIES
PRESSURE	3/8"
RETURN	1/2"
SUCTION	3/4"

RESERVOIR

The PTO reservoir should have a capacity of 10 gallons fitted with 100 mesh suction screen, 10 micron return line filter, and filler/breather cap.

▲ PTO PUMP

The PTO pump should be sized to provide 4.0 GPM at 3000 PSI when engine is at desired idle speed. These cranes' relief pressures are all set at 3000 psi.

PTO START-UP

Before connecting the PTO system to the crane pressure and return hoses, connect the PTO pressure and return lines together at the bulkhead. Operate the PTO system for about two (2) minutes per gallon of reservoir capacity (10 gallon reservoir = 20 minutes) to flush out the lines and filter all the fluid several times.

ENGINE START/STOP & THROTTLE CONTROL

If your crane was purchased with optional engine start/stop and throttle control, refer to drawing 22615 in the replacement parts section for further information.

CRANE OPERATION AND MAINTENANCE INSTRUCTIONS ▲

SAFETY

Before operating this crane, read and understand these instructions, the 920612 Crane Safety and Hazards Information Sheet, and review all safety & instruction labels on the crane.

CRANE INSPECTION

Before operating this crane, inspect for wear, damage, or oil leakage. After the wire rope has been run out, check for wear, kinks, and broken strands. Check the hook and safety latch for damage. Correct any problems before using the crane.

See Crane Safety Manual for proper inspection schedules and reports .

CAPACITY

Before operating this crane, review the capacity charts on the sides of the boom to relate the load to be lifted to the boom length and angle. The boom angle is shown by a gravity arrow.

LOAD BLOCK ▲

If the load exceeds the single-line rated load or if reduced winching speed for better control of smaller loads is required, use the load block to rig the crane for two part line operation.

CONTROLS ▲

The control pendant should be stored in a compartment or the cab when the crane is not in use.

Before activating the control pendant, inspect the cord(s) and pendant head/switches for damage. With the pendant OFF and the PTO disengaged, actuate all switches in both directions to verify that they all have the same feel/sound and return to the center position.

PTO SYSTEM ▲

Check the hydraulic fluid level in the PTO system reservoir. Engage PTO and set the engine speed to provide the desired hydraulic flow rate per the PTO system instructions.

CRANE OPERATION

Use "Winch Down" to release tension on the wire rope to unhook it from the storage tie down position.

Use "Boom Up" to elevate the boom from the boom rest position.

Avoid repeated rapid reversals of the control switches. This can cause the load to swing.

Check all control functions to see that they are working as described in the following section.

CONTROL FUNCTIONS

- WINCH "UP" and "DOWN" - Raises and lowers the load with the winch.
- BOOM "UP" and "DOWN" - Raises and lowers the boom elevation angle.
- BOOM "OUT" and "IN" - Extends and retracts the boom.
- ROTATION "L" and "R" - Controls the left and right direction of the crane rotation.
- TRIGGER - Varies the flow rate delivered to the crane valve. The farther the trigger is pulled, the faster the selected crane function operates.

CRANE OPERATION (with VLC TRANSMITTER)▲

- Turn master crane power ON.
- Disengage the E-STOP.
- Actuate the HORN toggle switch.
- Select the crane function toggle switch to be actuated.
- Pull the proportional trigger to control the speed of the selected crane function.
- NOTE: For safety reasons, the crane function toggle switch must be selected *before* pulling the proportional trigger or the crane will not operate.

VLC OVERLOAD SENSING SYSTEM

This crane is equipped with the Venturo Logic Control (VLC) overload sensing system. If the capacity of the crane is exceeded, the "Winch Up", "Boom Down", and "Boom Out" functions will be shut down. The "Winch Down", "Boom Up", and "Boom In" functions will continue to operate and can be used to relieve the overload condition. The "Rotation" function also will continue to operate.

TWO-BLOCK SENSING SYSTEM

This crane is equipped with an anti two-block device that is mounted at the tip of the boom. If the load block / overhaul weight contacts the device the "Winch Up", "Boom Down", and "Boom Out" functions are disabled. The "Winch Down", "Boom Up", and "Boom In" functions will continue to operate and can be used to relieve the two-block condition.

TRUCK SETUP & STABILIZERS

1. The truck should be parked on firm level ground.
2. The center of the crane should be positioned close enough to the job so that it can be operated at a reach that puts the load within the rated capacity of the crane.
3. Set the vehicle parking brake and put the vehicle transmission in "park" if it is an automatic.
4. Fully deploy stabilizers to help stabilize vehicle against rocking or overturning.
5. Use stabilizers to level vehicle only. Tires must maintain contact with ground.

PREPARATION FOR TRAVEL

1. Return the stabilizers to the stowed position. Install and secure all pins.
2. Stow the crane boom in the boom support.
3. Hook the winch line to a tie down point on the body or pedestal and apply tension.
4. Disengage the PTO pump and idle speed control.
5. Power down the control pendant and store in a body compartment or the cab.
6. Turn OFF power to crane. ▲

MAINTENANCE

The crane requires only periodic lubrication. As a standard procedure, this can be done at the time the vehicle is serviced.

The winch planetary gearbox lube should be maintained at the level plug.

To ensure optimal winch performance, the following lube schedule and lube specifications should be followed:

Initial Change - after 6 months or 100 hours of operation (whichever comes first).
Periodic Change - every 24 months or 300 hours of operation (whichever comes first).

HLP 46 or HLP 68 hydraulic oil

Service grease fittings and rotation gear with molybdenum-disulfide graphite-filled lithium-based extreme pressure grease.

Grease fitting locations:
Boom pivot at rear of boom
Slew drive (2 or 3 zerk fittings depending on component supplier)
Swing bearing race (2 zerk fittings)
Elevation cylinder base and rod pivots

Remove rear cover and check all hydraulic tube and hose fittings for tightness.

Check electrical connections for looseness and corrosion .

EXPLANATION OF HYDRAULIC VALVE SYSTEM
HT25/30 VLC SERIES CRANES

OVERVIEW

This proportional crane utilizes a proportional valve, which controls the rate at which the hydraulic fluid flows through the valve bank. When the proportional valve is fully closed, hydraulic fluid bypasses the valve bank and returns directly to the tank. When the proportional valve is fully open, hydraulic fluid cycles through the valve bank and allows the crane to function at full speed. When the proportional valve is at any setting between, a portion of the fluid is allowed through the valve bank, with the remainder returning to the tank.

The four [4] crane functions (winch, rotation, boom elevation, and boom extension) are controlled by four [4] separate valve sections. Each valve section has two [2] solenoid coils (and tow [2] manual overrides) which control the direction that the function operates (e.g. winch up vs. winch down). For a given crane function and direction (e.g. winch up), the solenoid coil and associated manual override reside on the same side of the valve bank (both "push").

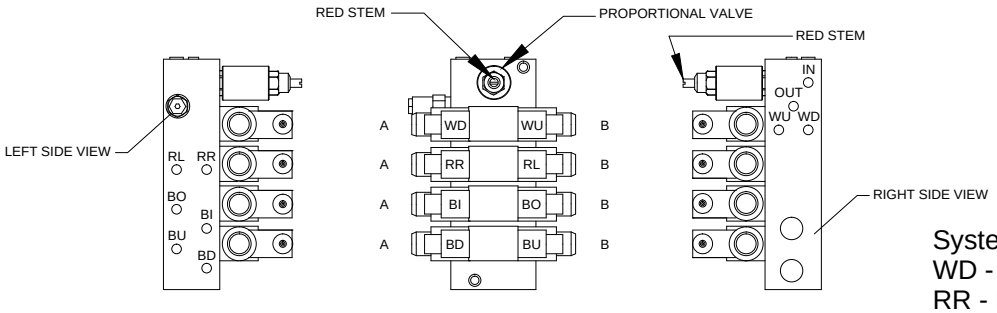

System abbreviations are as follows:

WD - Winch Down	WU - Winch Up
RR - Rotation Right	RL - Rotation Left
BI - Boom In (Ext.)	BO - Boom Out (Ext.)
BD - Boom Down (Elev.)	BU - Boom Up (Elev.)

MANUAL OVERRIDE SYSTEM

Should an electrical failure occur, your Venturo crane can be operated manually.
The manual overrides are intended for emergency use only and should not be used for normal operation.

To operate in manual override mode:

(1) Override the proportional valve by turning the red stem on the valve as stated below
- For override operation, rotate stem clockwise (the farther the stem is turned the faster the crane will operate)
- To return to normal operation, rotate the stem counter-clockwise until it stops

(2) Determine the coil / override associated with the function you wish to operate, then insert a small diameter object (an
- Allen wrench works well) into the detent on the end of the valve stem and firmly press inward. For example, pushing the stem labeled 'A' on the first bank (refer to illustration) will actuate winch down

W A R N I N G

- For normal crane operation, the proportional valve must be in the 'normal' position (as described above). To verify 'normal' operation, you may set the pendant (or radio) control aside and actuate a single crane function by pushing inward on any of the manual override pins, located at the ends of each function control valve. If that function operates, the proportional valve is still in manual override. Check the position of the proportional valve's red stem to insure that it is fully counter-clockwise.

400° ROTATION STOP LOCATION

Crane is shipped in "CURBSIDE" mounting configuration.

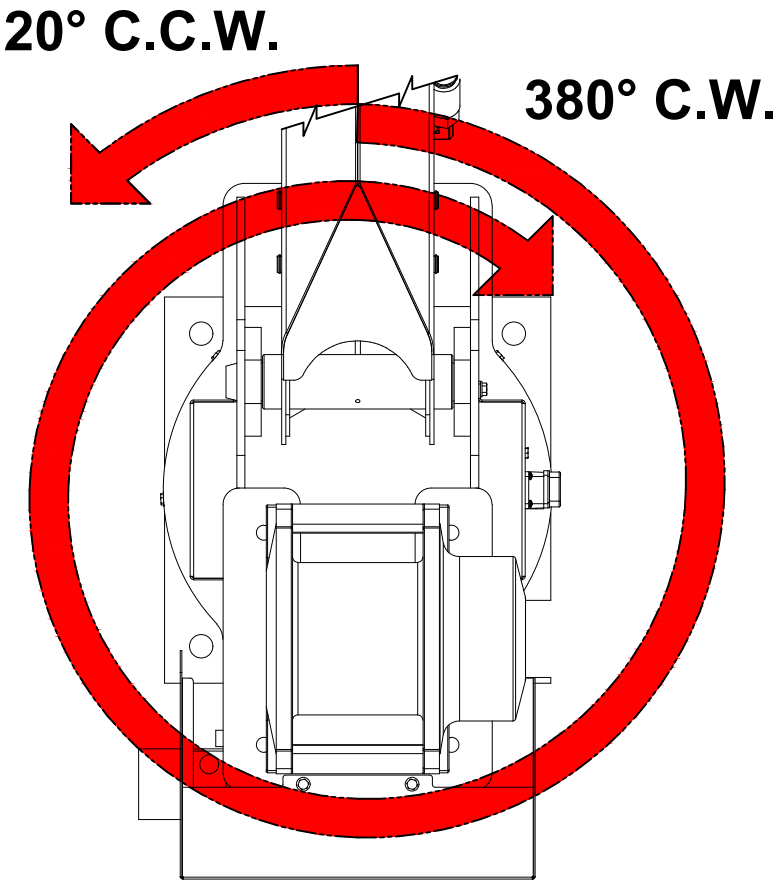

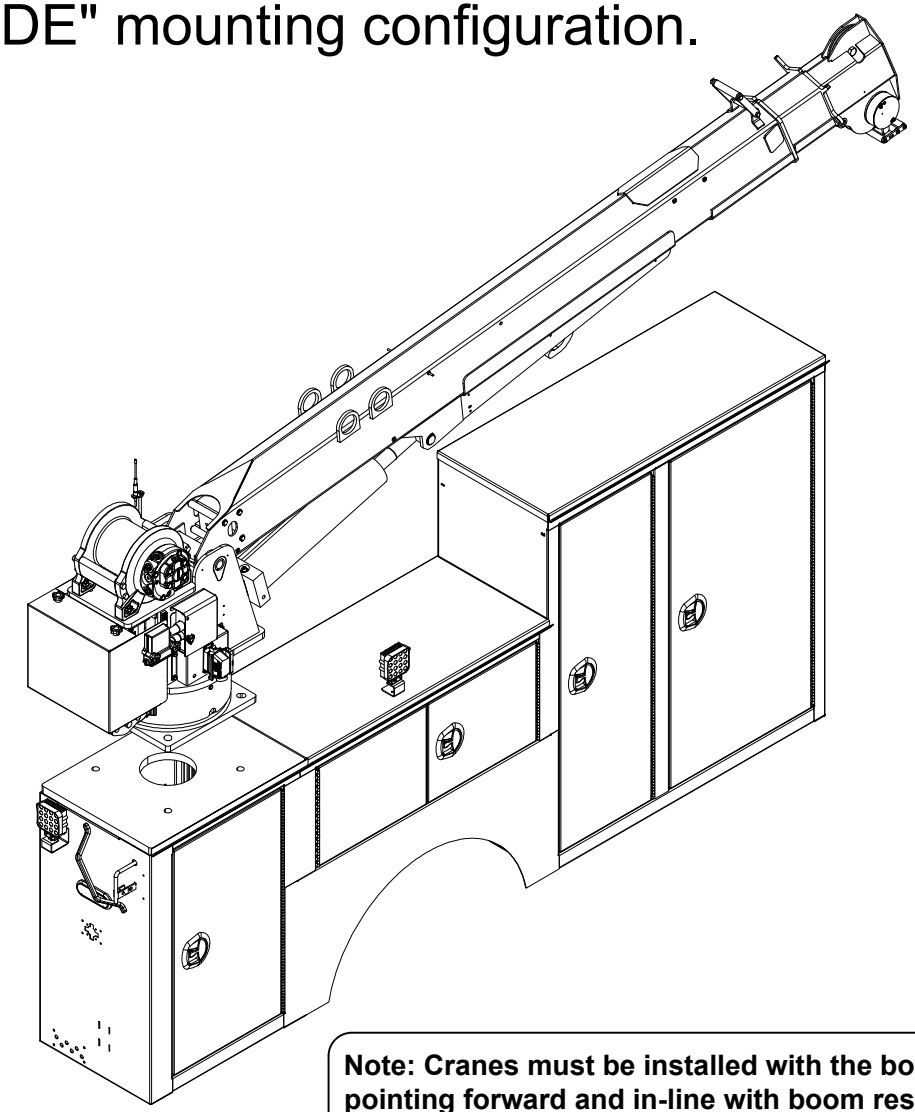

Note: Cranes must be installed with the boom pointing forward and in-line with boom rest.

Contact Venturo Tech Support for assistance. 1-800-226-2238.

STABILITY TEST - HT30-25'-VLC SERIES

Overview

Venturo follows the guidelines of ANSI B30.5 in defining stability. Generally speaking, a truck is considered stable as long as it is not on the verge of tipping - i.e. with the truck level, at least one tire on each corner of the truck must remain in contact with the ground.

It is important to note that nearly every installation is unique and will, therefore, typically require stability testing.

The procedure outlined below follows ANSI's (B30.5 - 5-1.1.1) specified "maximum load rating" of 85% of truck stability.

Testing Procedure

1. Locate the truck on firm, level ground and set parking brake.

2. Fully deploy stabilizers, making sure they are firmly in contact with supportive ground; use stabilizer pads as required. The tires of the truck should remain in full contact with the ground.

3. Inspect wire rope and other key components of crane (consult owners manual for more information).

4. Conduct an operational check of all crane functions.

5. Use a ***test weight*** weighing a ***minimum*** of ***1294 lbs***, (includes load block weight of 34 lbs.) to a ***maximum of 1350 lbs***.

6. Place the VLC system into ***Stability Mode*** (ref. VLC Manual)

7. Position the boom level and fully retracted

8. Referring to the Stability Chart (drawing 20907) rotate the crane to a position between 1 and 2 o'clock (truck cab is facing 12 o'clock) to begin testing.

9. Use the winch to lift the Test Weight; DO NOT allow the weight to be more than 6" off the ground at any time during testing (for safety).

10. Using the test weight, extend the boom slowly, until one of the three conditions occur:
    - 10.1. Full extension is reached - Mark the ZONE in question **100%**
    - 10.2. The VLC system stops the boom extension - Mark the ZONE in question **100%**
    - 10.3. The truck becomes unstable i.e. a tire lifts off the ground
      - 10.3.1. Retract the boom until at least one tire on each corner of the truck is making contact with the ground
      - 10.3.2. Use the formula below to determine the allowable ***% of Rated Capacity*** for the ZONE in question:

11. Note: The "***Max Stable Reach in inches"*** is measured from the ***center of rotation*** of the crane housing to the ***lifting load hook.***

$$\textbf{\% Rated Capacity} = \frac{\textbf{"Max Stable Reach" in inches"}}{\textbf{302}} \times \textbf{100}$$

12. Record the **% of Rated Capacity** in the appropriate blank (region) on the Crane Stability page (ref. 20907) and decal.

13. Repeat Steps 7 through 12 for each ZONE on the stability page.

CRANE STABILITY

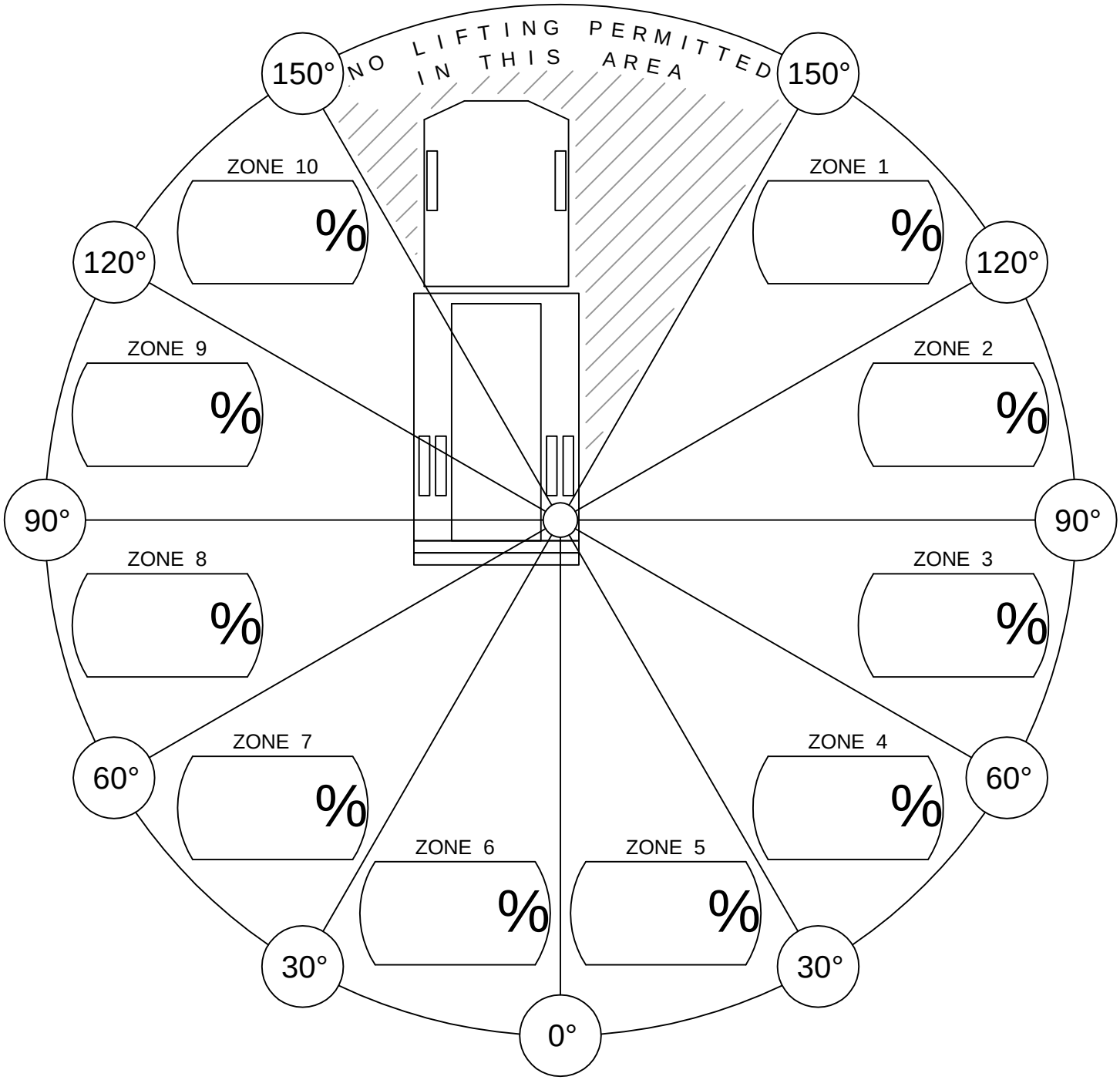

% of Rated Capacity for each of the 10 regions are provided above.

CONDITIONS:

- STABILIZERS FULLY EXTENDED & DOWN, ON FIRM LEVEL GROUND.

VENTURO® VENCO VENTURO INDUSTRIES LLC CINCINNATI, OHIO	TITLE STABILITY CHART	DATE 05-11-17F	SECTION C200
	VENTURO CRANES	SUPERSEDES 02-21-14E	20907

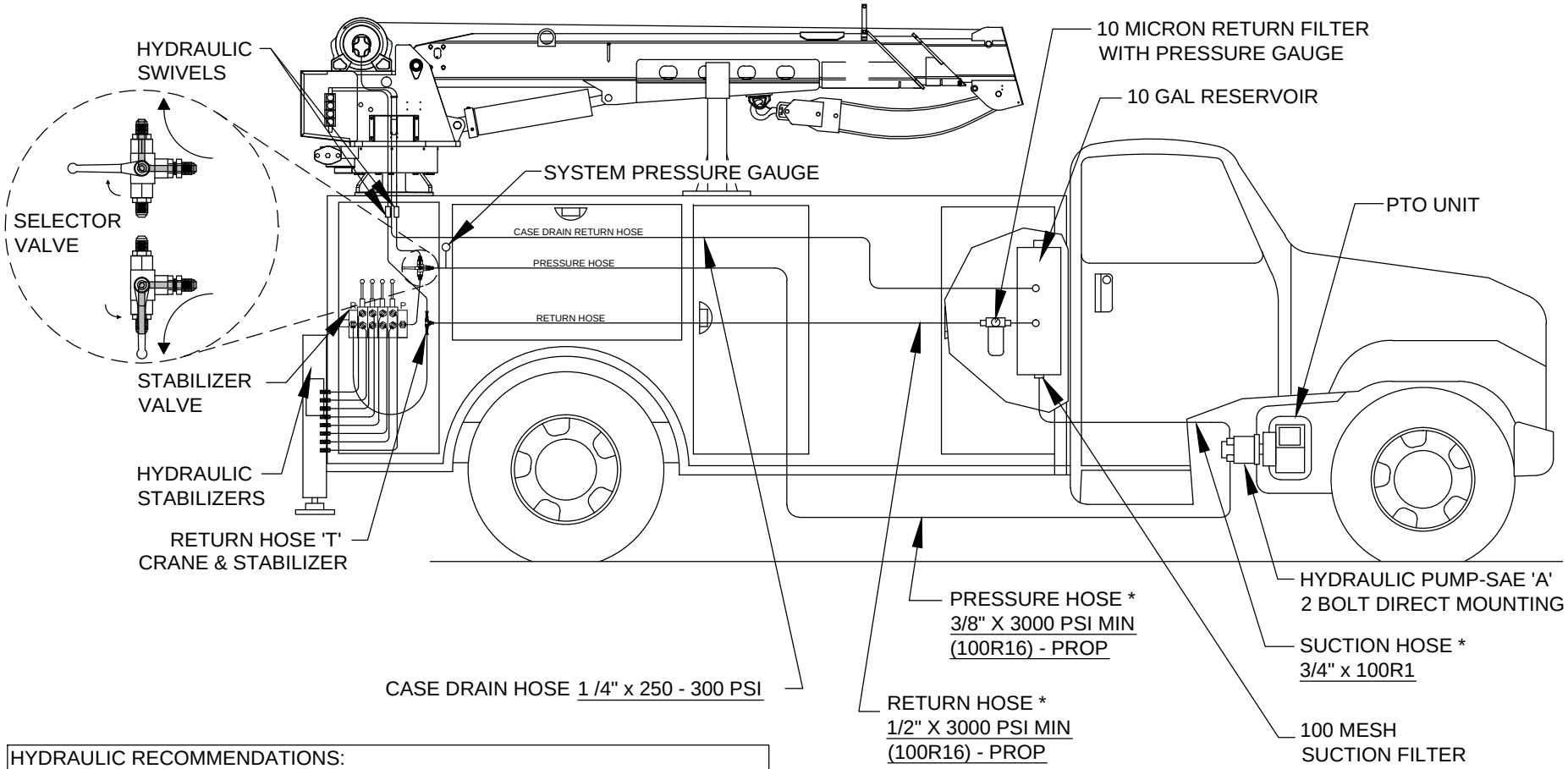

HYDRAULIC RECOMMENDATIONS:
HT25KX VLC - 4.0 GPM @ 3000 PSI (19294-4.00 KIT)
HT30KX VLC - 4.0 GPM @ 3000 PSI (19294-4.00 KIT)

⚠ CAUTION

- SELECTOR VALVE MUST BE 'NON-CLOSED CENTER TRANSITION' TYPE.

REFER TO SECTION 200 FOR MORE INFORMATION ON INSTALLING HYDRAULIC COMPONENTS.

* HOSES AND FITTINGS BETWEEN PUMP, RESERVOIR, AND CRANE *NOT INCLUDED*.

⚠ CAUTION

- THE CASE DRAIN LINE FROM THE WINCH MUST HAVE AN UNRESTRICTED PATH TO TANK/ RESERVOIR.

HYDRAULIC CIRCUIT CONNECTION GUIDE - SINGLE PUMP (NO COMPRESSOR)
(REFER TO SECTION 200 FOR MORE INFORMATION, INCLUDING HOSE SPECIFICATIONS)

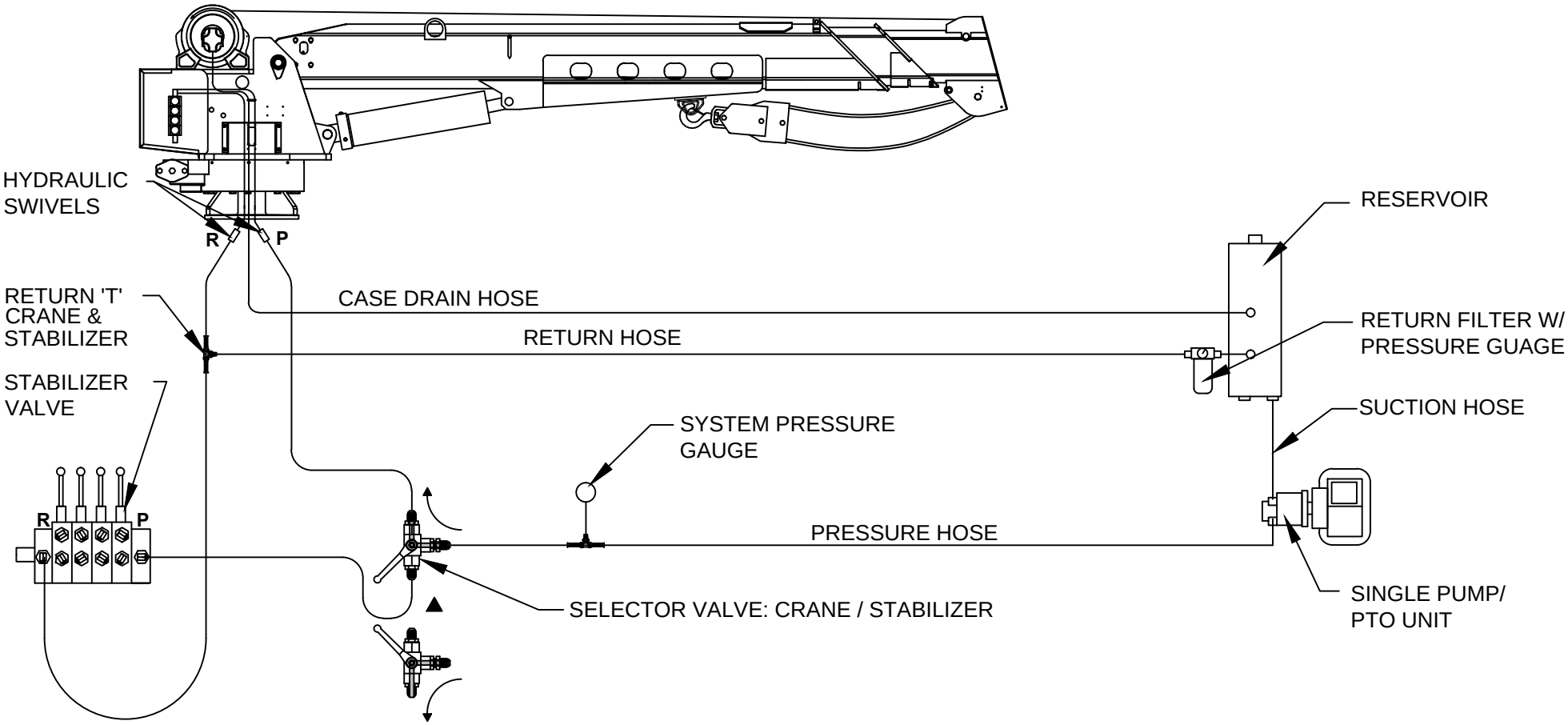

⚠ CAUTION

- SELECTOR VALVE MUST BE 'NON-CLOSED CENTER TRANSITION' TYPE.

⚠ CAUTION

- THE CASE DRAIN LINE FROM THE WINCH MUST HAVE AN UNRESTRICTED PATH TO TANK/ RESERVOIR.

HYDRAULIC CIRCUIT CONNECTION GUIDE - SINGLE PUMP W/ COMPRESSOR

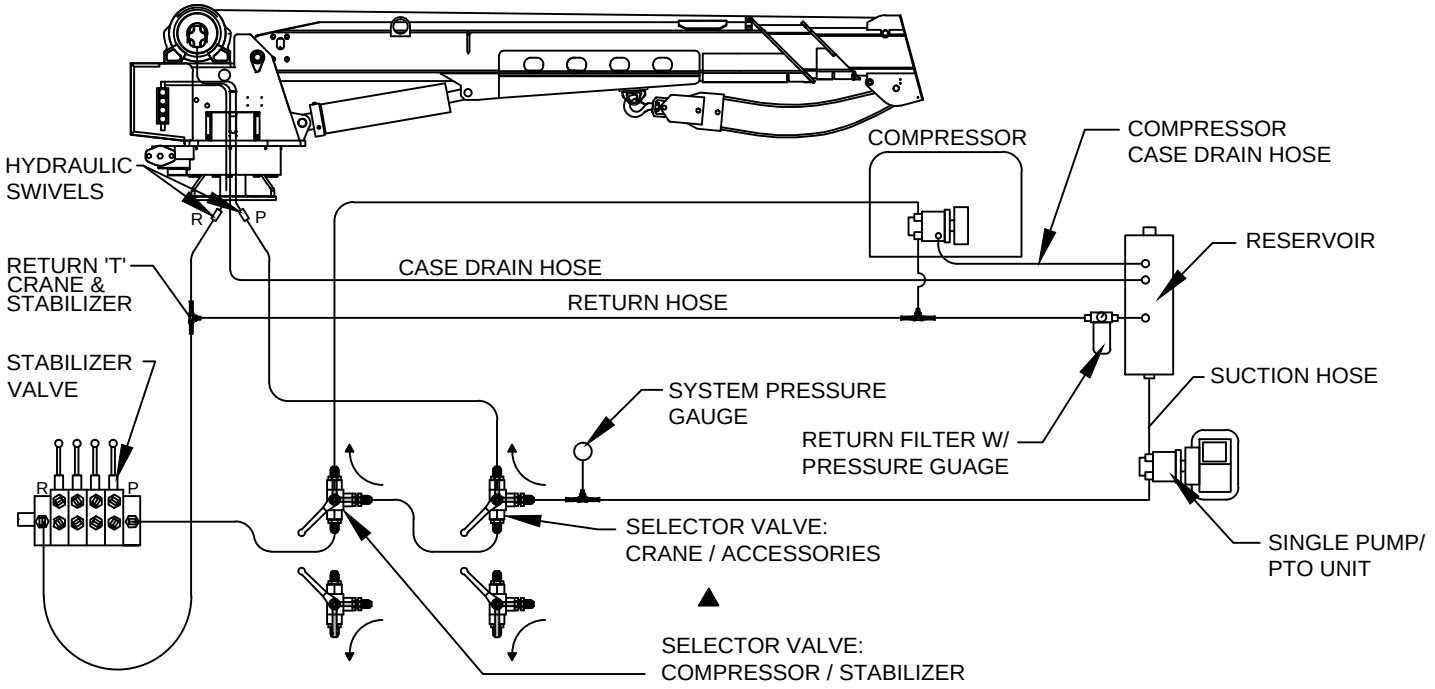

HYDRAULIC CIRCUIT CONNECTION GUIDE - TWO-STAGE PUMP W/ COMPRESSOR

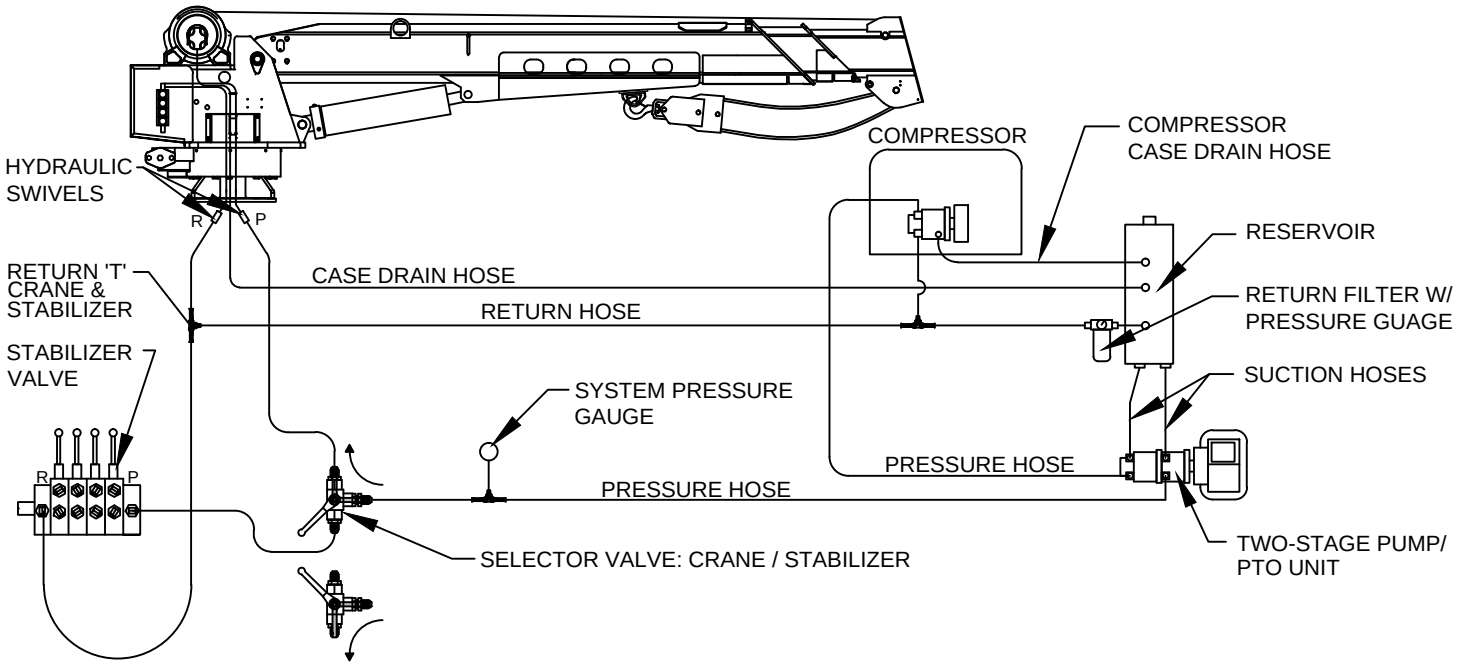

CAUTION

- SELECTOR VALVE MUST BE 'NON-CLOSED CENTER TRANSITION' TYPE.

REFER TO SECTION 200 FOR MORE INFORMATION, INCLUDING HOSE SPECIFICATIONS

CAUTION

- THE CASE DRAIN LINE FROM THE WINCH MUST HAVE AN UNRESTRICTED PATH TO TANK/ RESERVOIR.

RECOMMENDED SUPPLY & RETURN HOSE CONNECTIONS
CRANE & STABILIZERS

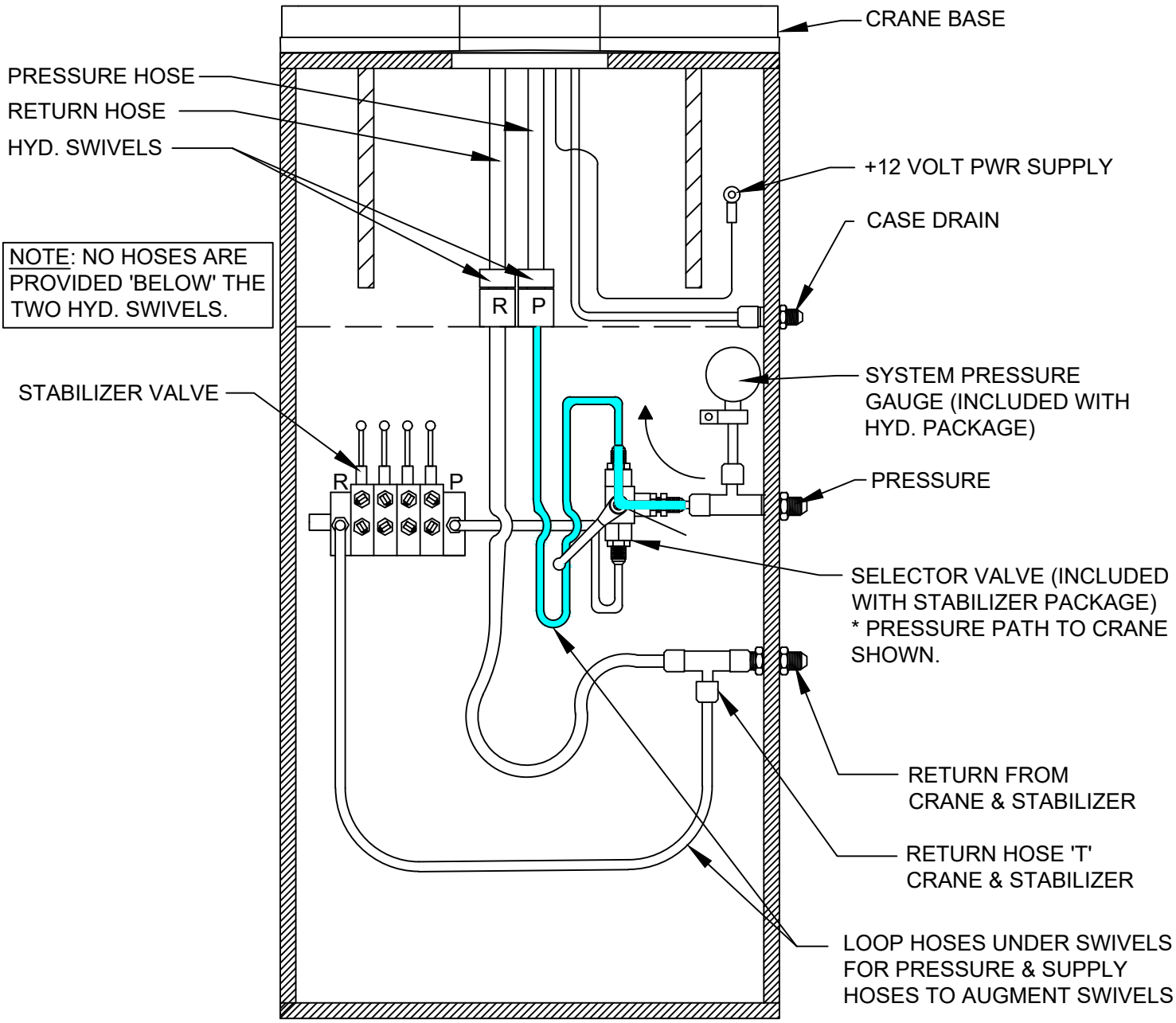

⚠ CAUTION

- SELECTOR VALVE MUST BE 'NON-CLOSED CENTER TRANSITION' TYPE VALVE.

⚠ CAUTION

- CASE DRAIN MUST RETURN DIRECTLY TO RESERVOIR WITHOUT RESTRICTION.

WIRE ROPE INSTALLATION

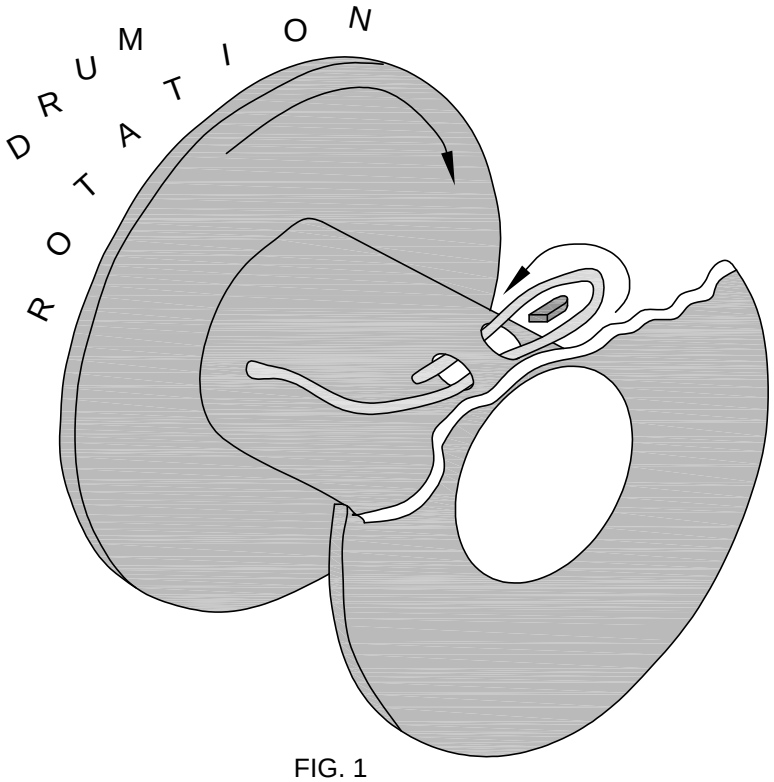

FIG. 1

STEP 1: UNWIND COIL OF WIRE ROPE BY 'ROLLING' ALONG THE FLOOR. THIS WILL PREVENT 'KINKING'.

STEP 2: INSERT WIRE ROPE END UP THROUGH ANTI-2-BLOCK (A2B) CAGE ASSEMBLY, BETWEEN CHEEK PLATES, OVER THE TOP SHEAVE, AND THROUGH WIRE ROPE GUIDE.

STEP 3: INSERT WIRE ROPE END INTO POCKET OPENING ON WINCH, WRAP AROUND WEDGE, AND BACK THROUGH POCKET OPENING AS SHOWN IN FIGURE 1.

⚠ CAUTION

- IF THE WIRE ROPE IS NOT INSTALLED FOR THE CORRECT DRUM ROTATION, THE WINCH BRAKE VALVE WILL NOT HOLD THE LOAD.

⚠ CAUTION

- THERE MUST ALWAYS BE AT LEAST [5] DEAD WRAPS OF WIRE ROPE ON THE WINCH DRUM WHILE UNDER LOAD.

NOTE: SOME WINCHES MAY BE SUPPLIED WITH A HEX NUT IN LIEU OF A WEDGE FOR INSTALLING THE WIRE ROPE.

SECTION 300

MAINTENANCE

&

SERVICE

VENCO VENTURO INDUSTRIES LLC
CINCINNATI, OHIO

7607300A

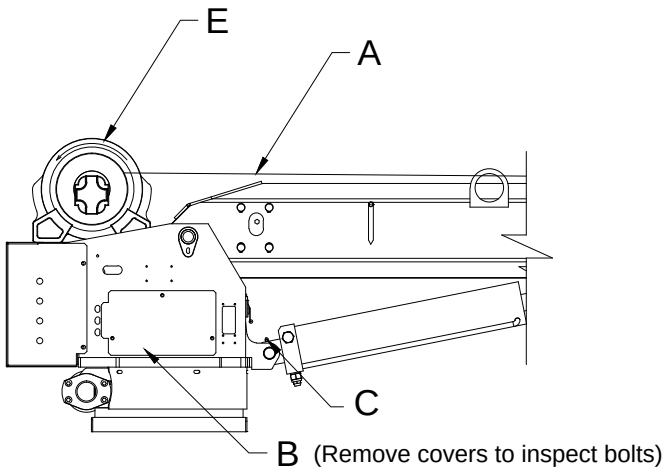

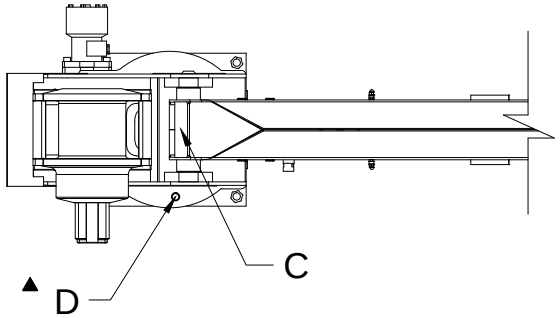

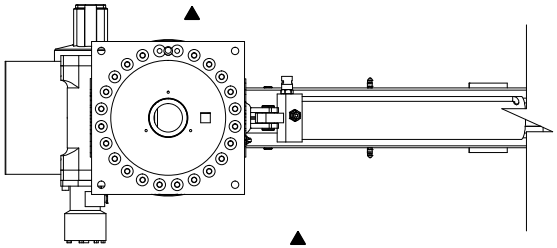

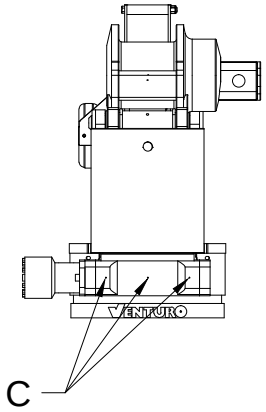

Location	Service Required	Note	Service Interval
A	Check wire rope and hook	Rope should be free of kinks and fraying	Prior to Use (Daily)
B	Check torque of upper slew-drive bolts	Bolts should be torqued to 60 ft-lbs	Time of Truck Service
C	Grease fitting with pressure grease gun	Use Lithium-based grease	Time of Truck Service
D	Grease fitting with pressure grease gun	Use Lithium-based grease	Every 6 months
E	Check winch gearbox oil level	HLP 46 or HLP 68 hydraulic oil	Every 24 months

VENTURO®

VENCO VENTURO INDUSTRIES LLC
CINCINNATI, OHIO

TITLE	DATE	SECTION
LUBRICATION & MAINTENANCE CHART	01-16-25D	C300
HT25/30 CRANES	SUPERSEDES 07-11-23C	21956

MAINTENANCE OVERVIEW INFORMATION

MAINTENANCE

The crane requires only periodic lubrication. As a standard procedure, this can be done at the time the vehicle is serviced.

GENERAL

Inspect wire rope for any evidence of kinks or fraying. Ensure that lifting hook of wire rope shows no evidence of damage and is functioning normally.

Inspect headache ball ("load block") for any signs of damage or excessive wear.

Service all grease fitting locations.

Inspect hydraulic hoses and hydraulic fittings for hydraulic leaks.

Inspect electrical connections for any looseness or corrosion.

Inspect bolts and verify all are tight, paying particular attention to winch, rotation system, and mounting base bolts.

Inspect all pins and snap rings for proper fit and function.

Inspect sheaves for excessive wear or play.

Perform a basic inspection of the winch with each use, monitoring for unusual noise or hydraulic leaks.

WIRE ROPE ASSEMBLY

WIRE ROPE:

5/16" DIA, 100' LONG

GAC 7X19 XIP-RHRL-IWRC, SB 9800 LBS

P/N: 27668-5/16-100

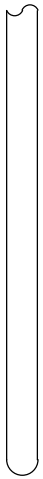

TERMINATES IN THIMBLE

NO HOOK

LOAD BLOCK ASSEMBLY

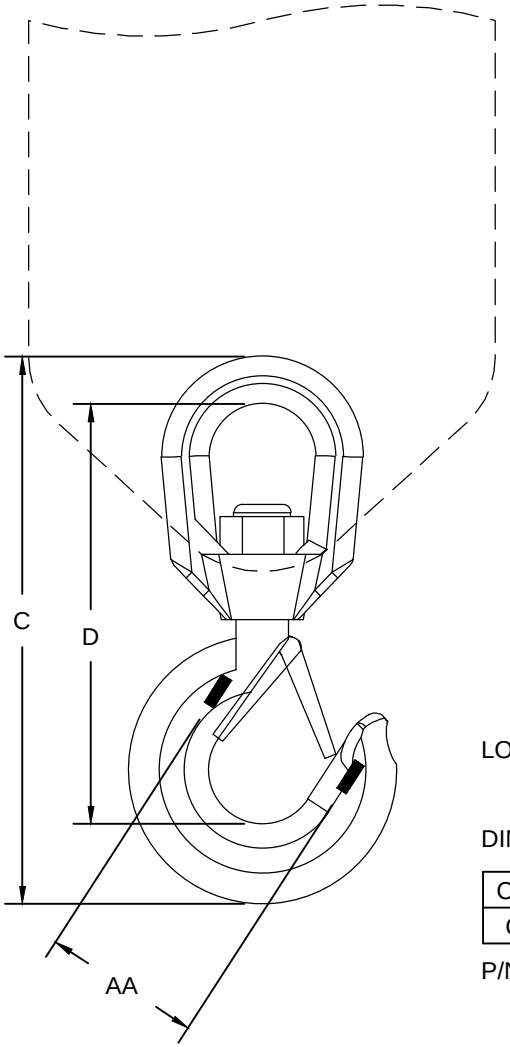

LOAD BLOCK HOOK:

RATING: 3 TONNE (6615 LBS)

DIMENSIONS:

COLOR	BRAND	AA	C	D
GOLD	CROSBY	2.00"	8.25"	6.50"

P/N: 27667

VENTURO®

VENCO VENTURO INDUSTRIES LLC
CINCINNATI, OHIO

TITLE	DATE	SECTION
WIRE ROPE & HOOK SPECIFICATIONS	05-03-21	C300
HT25/30KX-25'	SUPERSEDES -	23920

SECTION 400

REPLACEMENT PARTS

VENCO VENTURO INDUSTRIES LLC
CINCINNATI, OHIO

7607400A

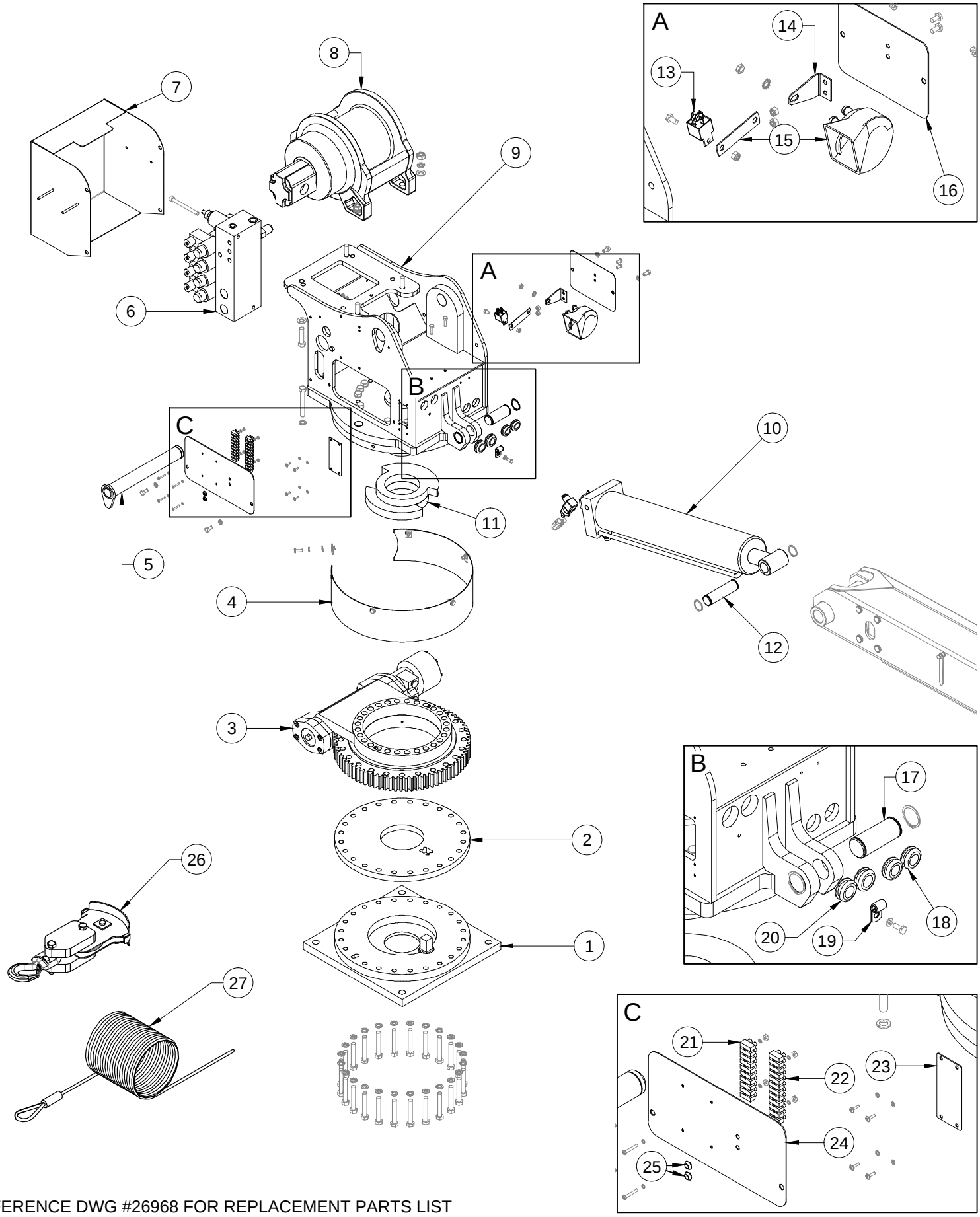

REFERENCE DWG #26968 FOR REPLACEMENT PARTS LIST

VENTURO® VENCO VENTURO INDUSTRIES LLC CINCINNATI, OHIO	TITLE RPLCMNT PARTS DWG	DATE 12-05-24B	SECTION C400
	HT25/30 VLC CRANES	SUPERSEDES 09-24-24A	26967

REPLACEMENT PARTS LIST; MECHANISM, HT25/30 VLC

ITEM NO.	PART NO.	QTY	DESCRIPTION
1	27520-m-1	1	WELDED ASS'Y; MOUNTING BASE
2	27520H	1	SPACER
3	21418	1	SLEWING RING
4	27186	1	COVER; ROTATION GEAR
5	21012	1	PIN; MAIN BOOM PIVOT
6	22501-P-175-300	1	VALVE MANIFOLD
7	27315	1	COVER; REAR
8	19814	1	WINCH; HYDRAULIC
9	26567	1	HOUSING; MECHANISM
10	21752	1	CYLINDER; ELEVATION
11	27557	1	STOP RING; ROTATION
12	18761	1	PIN; ELEVATION PIVOT, OUTBOARD
13	22739	1	RELAY
14	22000	1	BRACKET; HORN
15	21948	1	HORN
16	23156	1	COVER; LEFT SIDE
▲ 17	18768	1	PIN; ELEVATION PIVOT, LOWER
18	20890	2	GROMMET; Ø1" X 1/4"
19	19269	1	CLAMP; 1/4"
20	26586	2	GROMMET; Ø1-1/4" X 1/4"
21	19187-10	1	TERMINAL STRIP; 10 SECTIONS
22	19187-12	1	TERMINAL STRIP; 12 SECTIONS
23	20068	1	COVER PLATE
24	27000	1	COVER; RIGHT SIDE
25	23069	2	PLUG; ROUND BLACK PLASTIC
26	27667	1	LOAD BLOCK ASSEMBLY
27	27668-5/16-80	1	WIRE ROPE (HT25KX-20' ONLY)
27	27668-5/16-100	1	WIRE ROPE (HT30KX-25' ONLY)

* DOES NOT INCLUDE VLC-SPECIFIC COMPONENTS. PLEASE REFERENCE VLC MANUAL.

REFERENCE DWG #26967 FOR REPLACEMENT PARTS DRAWING

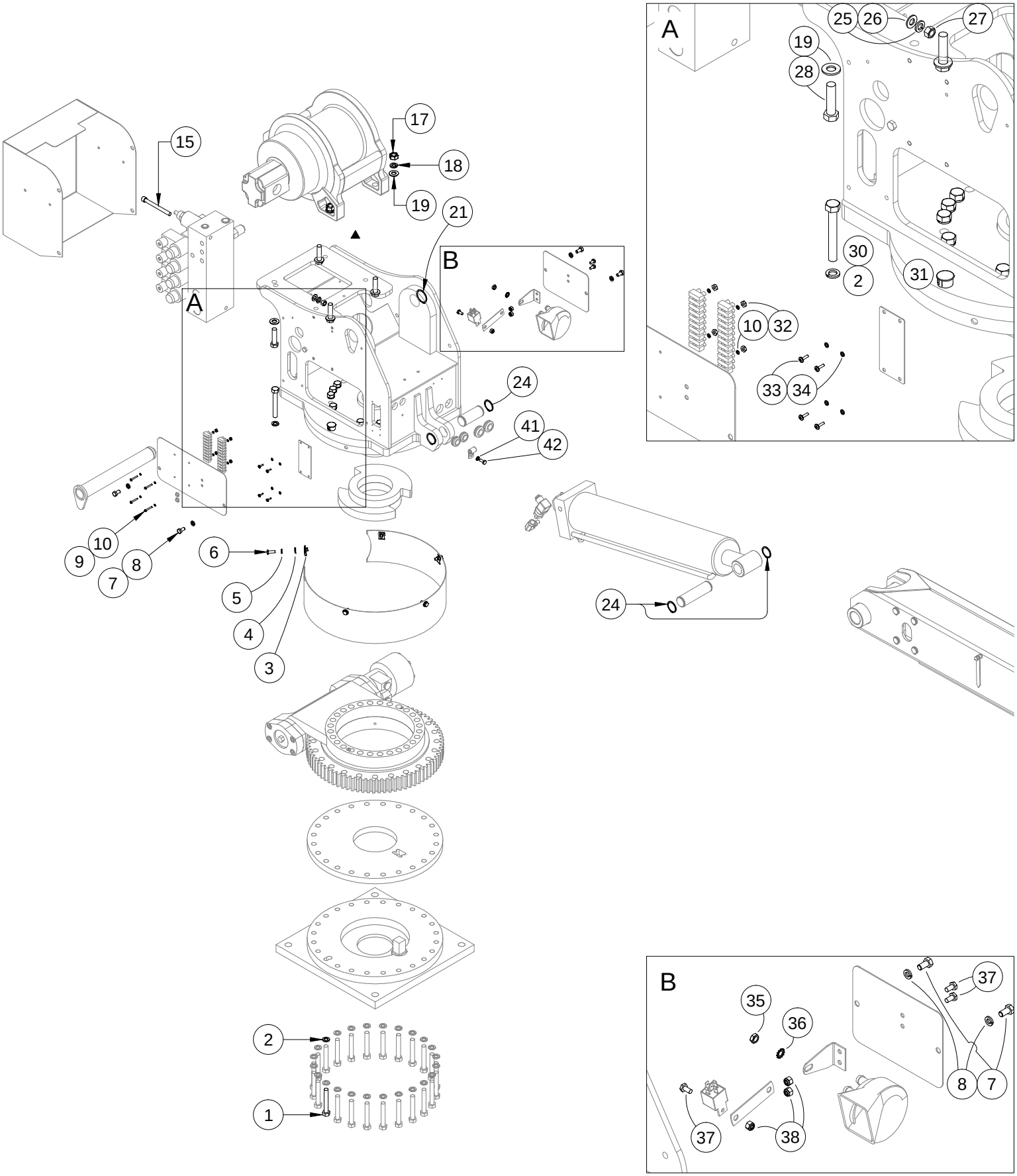

REFERENCE DWG #26970 FOR REPLACEMENT FASTENERS LIST

VENTURO® VENCO VENTURO INDUSTRIES LLC CINCINNATI, OHIO	TITLE RPLCMNT FASTENERS DWG	DATE 09-24-24A	SECTION C400
	HT25/30 VLC CRANES	SUPERSEDES 07-02-24	26969

REPLACEMENT FASTENERS LIST; MECHANISM, HT25/30 VLC

ITEM #	PART #	QTY	DESCRIPTION	WHERE-USED
1	!HHCSM12175080-8.8	24	HHCS; 12mm-175 X 80mm, GR. 8.8	MOUNTING & SPACER PLATES TO SLEW DRIVE
2	!LWSH-050	45	LOCK WASHER; 1/2, ZINC	ITEM #1 AND ITEM #30
3	!UNUT-02520-LKG	5	U-NUT; 1/4-20, LOCKING	GEAR COVER TO HOUSING
4	!FWSH-025S	5	FLAT WASHER; 1/4, S/S	GEAR COVER TO HOUSING
5	!LWSH-025S	5	LOCK WASHER; 1/4, S/S	GEAR COVER TO HOUSING
6	!HHCS02520063S	5	HHCS; 1/4-20 X 5/8, S/S	GEAR COVER TO HOUSING
7	!HHCS03118063S	4	HHCS; 5/16-18 X 5/8, S/S	SIDE COVERS TO HOUSING
8	!LWSH-031S	4	LOCK WASHER; 5/16, S/S	SIDE COVERS TO HOUSING
9	!PHPMS#0632100S	4	PHPMS; #06-32 X 1, S/S	TERMINAL STRIPS TO SIDE COVER
10	!LWSH-#-06S	4	LOCK WASHER; #06, S/S	TERMINAL STRIPS TO SIDE COVER
11	-	-	-	-
12	-	-	-	-
13	-	-	-	-
14	-	-	-	-
15	!SHCS03816400	1	SHCS; 3/8-16 X 4, BLACK OXIDE	MANIFOLD TO HOUSING
16	-	-	-	-
17	!HNUT-05013-8	4	HEX NUT; 1/2-13, GR. 8	WINCH TO HOUSING
18	!LWSH-050	4	LOCK WASHER; 1/2, GR. 5 ZINC	WINCH TO HOUSING
19	!FWSH-050	8	FLAT WASHER; 1/2, GR. 5 ZINC	WINCH TO HOUSING
20	-	-	-	-
▲ 21	24842-150	1	SPIRAL RETAINING RING - 1-1/2 - S/S	MAIN BOOM PIVOT PIN
22	-	-	-	-

ITEM #	PART #	QTY	DESCRIPTION	WHERE-USED
23	-	-	-	-
24	!SRNG-125	4	SNAP RING; 1-1/4	ELEVATION CYL. PIVOT PINS
25	!LWSH-038	1	LOCK WASHER; 3/8	MANIFOLD TO HOUSING
26	!FWSH-038	1	FLAT WASHER; 3/8	MANIFOLD TO HOUSING
27	!HNUT-03816	1	HEX NUT; 3/8-16	MANIFOLD TO HOUSING
28	!HHCS05013200-8	4	HHCS; 1/2-13 X 2, GR. 8	WINCH TO HOUSING
29	-	-	-	-
30	!HHCSM12175090-8.8	21	HHCS; 12mm-175 X 90mm, GR. 8.8	HOUSING TO SLEW DRIVE
31	25019	1	PLUG; 7/8, PLASTIC	HOLE ON RT-SIDE HOUSING
32	!HNUT-#0632S	4	HEX NUT; #06, S/S	TERMINAL STRIPS TO INNER RT-SIDE COVER
33	!SHPMS#0832050S	4	SHPMS; #08-32 X 1/2, S/S	COVER PLATE TO HOUSING
34	!LWSH-#08S	4	LOCK WASHER; #08, S/S	COVER PLATE TO HOUSING
35	!HNUT-03124	1	HEX NUT; 5/16-24, GR. 5 ZINC	HORN TO BRACKET
36	!LWSH-031	1	LOCK WASHER; 5/16, GR. 5 ZINC	HORN TO BRACKET
37	!HHCS02520050S	3	HHCS; 1/4-20 X 1/2, S/S	BRACKET TO SIDE COVER; RELAY TO BRACE
38	!LNUT-02520NS	3	LOCK NUT; 1/4-20, NYLON, S/S	BRACKET TO SIDE COVER; RELAY TO BRACE
39	-	-	-	-
40	-	-	-	-
41	!LWSH-025S	1	LOCK WASHER; 1/4, S/S	CLAMP TO HOUSING
42	!HHCS02520063S	1	HHCS; 1/4-20 X 5/8, S/S	CLAMP TO HOUSING

* DOES NOT INCLUDE VLC-SPECIFIC COMPONENTS. PLEASE REFERENCE VLC MANUAL.

REFERENCE DWG #26969 FOR REPLACEMENT FASTENERS DRAWING

HHCS =HEX HEAD CAP SCREW, PHPMS = PHILIPS-HEAD PAN MACHINE SCREW,
SHPMS = SLOT-HEAD PAN MACHINE SCREW, S/S = STAINLESS STEEL

VENTURO®

VENCO VENTURO INDUSTRIES LLC
CINCINNATI, OHIO

TITLE	DATE	SECTION
REPLACEMENT FASTENERS LIST - MECH	08-26-25B	C400
HT25/30 VLC CRANES	SUPERSEDES 09-24-24A	26970

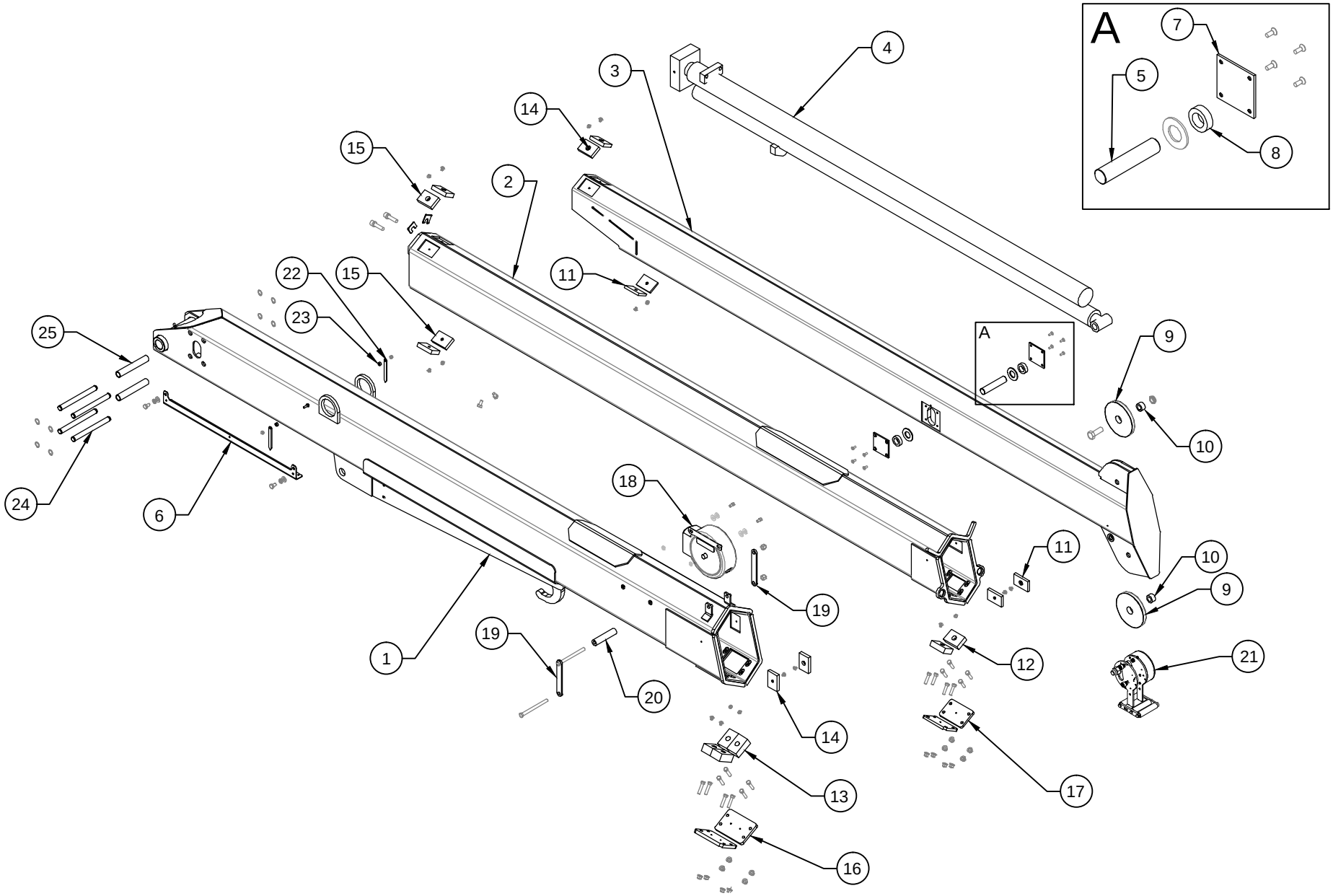

REFERENCE #26976 FOR REPLACEMENT PARTS LIST

VENTURO®

VENCO VENTURO INDUSTRIES LLC
CINCINNATI, OHIO

TITLE	DATE	SECTION
REPLACEMENT PARTS DWG, 26573 BOOM	12-05-24A	C400
HT30KX-25' VLC SERIES	SUPERSEDES 07-03-24	26975

REPLACEMENT PARTS LIST; 26573 BOOM

ITEM	PART NO.	QTY	DESCRIPTION
1	▲ 26574	1	WELDED ASS'Y; PRIMARY BOOM
2	28252	1	WELDED ASS'Y; SECONDARY BOOM
3	28253	1	WELDED ASS'Y; TERTIARY BOOM
4	21749	1	EXTENSION CYLINDER; 156"
5	21405	1	PIN; EXTENSION CYLINDER
6	26940-1	1	HEX BOOM CABLE GUIDE
7	23116	2	PIN BLOCK; REINFORCING
8	21428	2	BUSHING; 1" BORE x 1-5/8" OD, 1/2"
9	27001	2	SHEAVE; POLY CABLE
10	23924	2	SPACER; SHEAVE
11	23631-3	4	BOOM PAD; UHMW, 'A', 2.00 x 3.00 x 0.38
12	23631-7	2	BOOM PAD; UHMW, 'A', 2.00 x 3.00 x 0.88
13	23631-10	4	BOOM PAD; UHMW, 'A', 2.00 x 3.00 x 1.25
14	23631-4	4	BOOM PAD; UHMW, 'A', 2.00 x 3.00 x 0.50
15	23631-5	4	BOOM PAD; UHMW, 'A', 2.00 x 3.00 x 0.63
16	23677	2	COVER PLATE; PRIM. ADJ. PAD
17	23678	2	COVER PLATE; SEC. ADJ. PAD
18	26577-1-25	1	CORD REEL ASSEMBLY
19	21936	2	FLAT, MOUNT; WIRE ROPE GUIDE

ITEM	PART NO.	QTY	DESCRIPTION
20	21560	1	ROLLER; UHMW GUIDE
21	27469-L-C-11	1	COMPACT A2B ASSEMBLY
22	13459-2	2	BOOM ARROW; 4" LONG
23	22490	2	SPACER ;BOOM ARROW
24	27293	4	THRUST PIN; EXT. CYL.
25	24535	2	THRUST ROLLER; EXT. CYL.
26	-	-	-
27	-	-	-
28	-	-	-
29	-	-	-
30	-	-	-
31	-	-	-
32	-	-	-
33	-	-	-
34	-	-	-
35	-	-	-
36	-	-	-
37	-	-	-
38	-	-	-

* DOES NOT INCLUDE VLC-SPECIFIC COMPONENTS. PLEASE REFERENCE VLC MANUAL.

REFERENCE #26975 FOR REPLACEMENT PARTS DRAWING

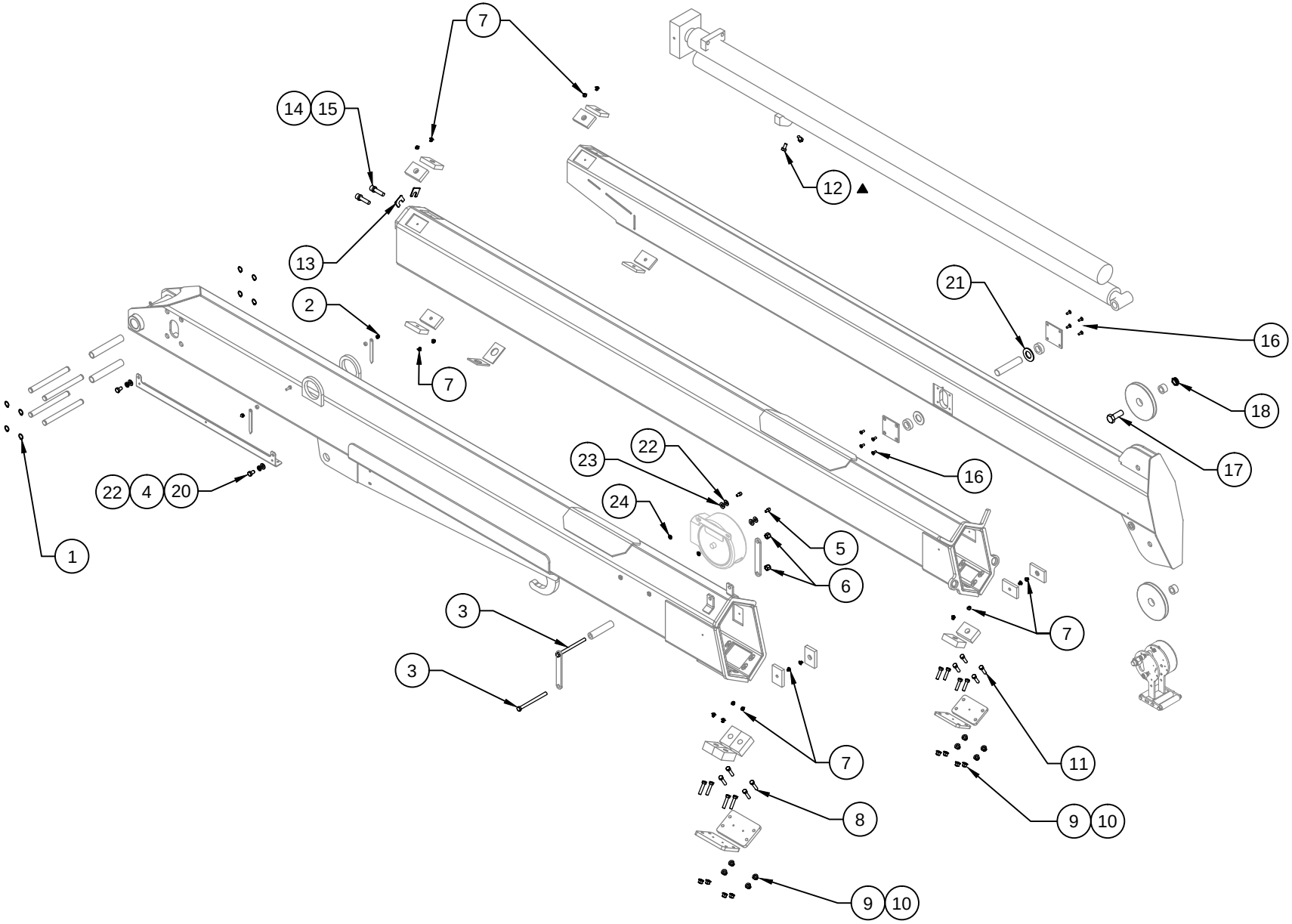

REFERENCE #26978 FOR REPLACEMENT HARDWARE LIST

VENTURO® VENCO VENTURO INDUSTRIES LLC CINCINNATI, OHIO	TITLE REPLACEMENT H/W DWG, 26573 BOOM	DATE 11-18-24A	SECTION C400
	HT30KX-25' VLC SERIES	SUPERSEDES 07-08-24	26977

REPLACEMENT HARDWARE LIST; 26573 BOOM

	ITEM	PART NO.	QTY	DESCRIPTION
	1	!SRNG-075	8	SNAP RING 3/4" - PLATED
	2	!ANUT-02520S	2	ACORN NUT; 1/4-20, SS
	3	!HHCS04414550	2	HEX HEAD CAP SCREW, 7/16-14 X 5-1/2, GR5
	4	!LWSH-031S	4	LOCK WASHER; 5/16", SS
	5	!SHCS03118063S	2	SHCS; 5/16-18 X 5/8" LG, S/S
	6	!LNUT-04414	2	LOCK NUT; 7/16-14, GR. 5 NYLON-INSERT
	7	!THCS02520038	18	TRUSS HEAD PHILLIPS SCREW; 1/4-20 X 3/8
	8	!HHCS03816175	8	HHCS; 3/8-16 X 1-3/4 GR.5
	9	!FWSH-038	16	FLAT WASHER, 3/8"
	10	!LNUT-03816	16	LOCK NUT; 3/8-16, GR. 5, NYLON-INSERT
	11	!HHCS03816150	8	HHCS; 3/8-16 X 1-1/2, GR. 5
▲	12	!HHCS03816100N	2	HHCS; NYLON PATCH 3/8-16 X 1", GR. 5 ZINC
	13	14159-2	8	SHIM, 27 GA., SS
	14	!LWSH-050-HC	2	LOCK WASHER; 1/2, GR. 5, HI-COLLAR
	15	!SHCS05013200	2	SHCS; 1/2-13 X 2
	16	!CACS02520050S	8	C'SINK ALLEN HEAD CAP SCREW; 1/4-20 X 1/2 SS
	17	17059-6	1	SHEAVE AXLE; 3/4-10NC x 3-1/2" LG
	18	!LNUT-07510	2	NYLON LOCK NUT, 3/4-10, GR5
	19	27467	4	SHCS; 1/2-13 X 3/4, BLACK NYLON
	20	!HHCS003118050S	2	HHCS; 5/16-18 X1/2", S/S
	21	!FWSH-100SAE	2	FLAT WASHER; 1" SAE
	22	!FWSH-031S	4	FLAT WASHER; 5/16", S/S
	23	01016	2	FIBER WASHER
	24	28198	2	INSULATING SLEEVE WASHER - 5/16"
	25	-	-	-
	26	-	-	-

* DOES NOT INCLUDE VLC-SPECIFIC COMPONENTS. PLEASE REFERENCE VLC MANUAL.
REFERENCE #26977 FOR REPLACEMENT HARDWARE DRAWING

COMPACT A2B - 27469-* - REPLACEMENT PARTS LIST

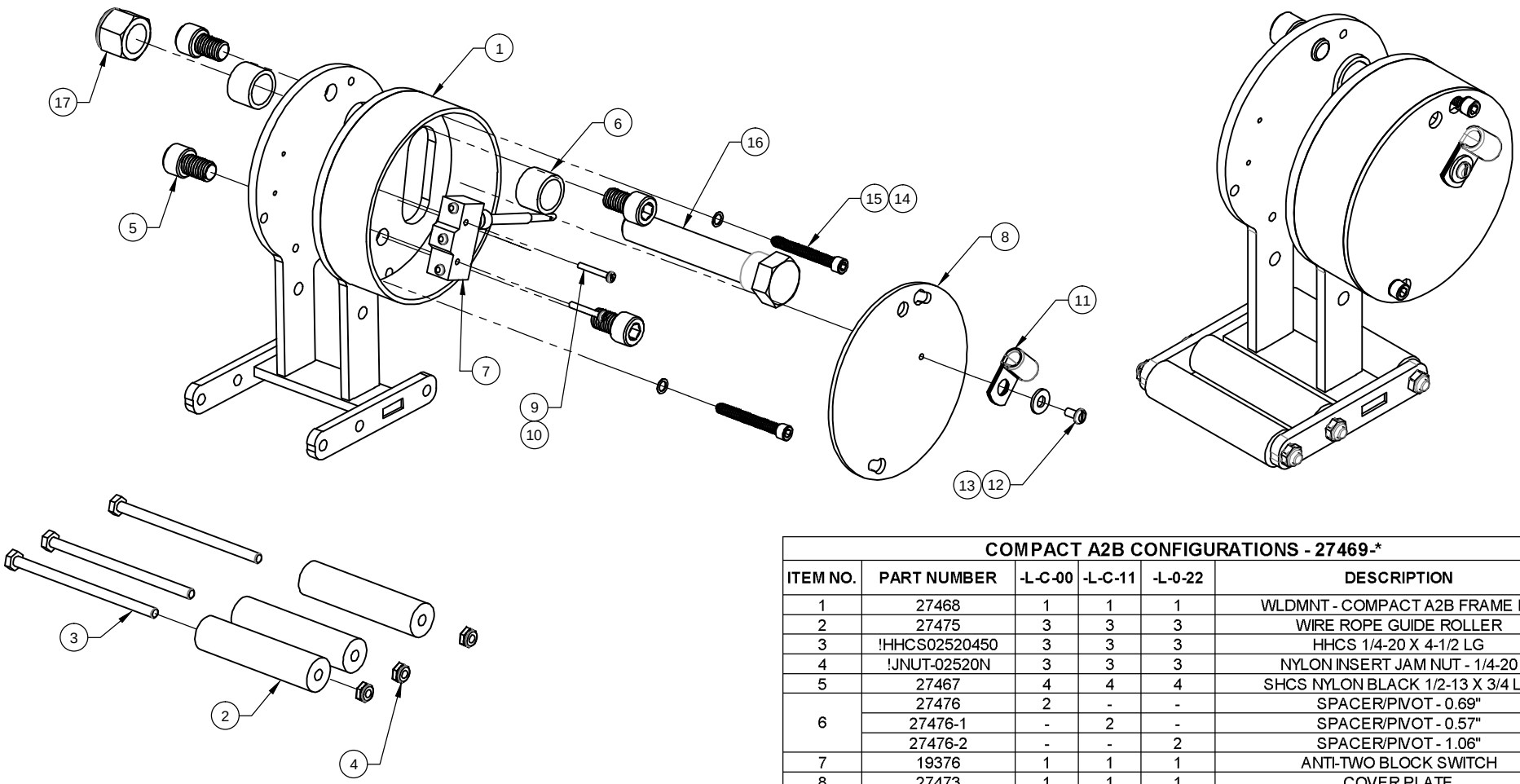

COMPACT A2B CONFIGURATIONS - 27469-*					
ITEM NO.	PART NUMBER	-L-C-00	-L-C-11	-L-0-22	DESCRIPTION
1	27468	1	1	1	WLDMNT - COMPACT A2B FRAME LH
2	27475	3	3	3	WIRE ROPE GUIDE ROLLER
3	!HHCS02520450	3	3	3	HHCS 1/4-20 X 4-1/2 LG
4	!JNUT-02520N	3	3	3	NYLON INSERT JAM NUT - 1/4-20
5	27467	4	4	4	SHCS NYLON BLACK 1/2-13 X 3/4 LG
6	27476	2	-	-	SPACER/PIVOT - 0.69"
	27476-1	-	2	-	SPACER/PIVOT - 0.57"
	27476-2	-	-	2	SPACER/PIVOT - 1.06"
7	19376	1	1	1	ANTI-TWO BLOCK SWITCH
8	27473	1	1	1	COVER PLATE
9	!PHCS#0632100	2	2	2	PHILLIPS HEAD CAP SCREW 6-32 X 1 LONG
10	!LWSH-#06	2	2	2	LOCK WASHER - 6
11	19269	1	1	1	WIRE CLAMP, 3/8 ID VIBRATION DAMPING
12	!PHCS#1032038	1	1	1	PAN HEAD CAP SCREW 10-32 X 3/8 LONG
13	!FWSH-025	1	1	1	FLAT WASHER - 1/4
14	!SHCS02520200SS	2	2	2	SHCS, 1/4-20 X 2.00 LONG, STAINLESS STEEL
15	23379	2	2	2	WASHER, NYLON, BLACK, .375" O.D. X .25" I.D.
16	28362	1	1	-	COMPACT A2B CUT-OUT CAM WELDED ASSY.
	!HHCS07510450	-	-	1	HHCS, 3/4-10 X 4.50 LONG, GR.5
17	LNUT-07510	1	1	1	NYLON INSERT LOCK NUT - 3/4-10

VENTURO®

VENCO VENTURO INDUSTRIES LLC
CINCINNATI, OHIO

TITLE	DATE	SECTION
REPLACEMENT PARTS LIST	7-10-24A	C400
COMPACT A2B - 27469-*	SUPERSEDES 06-11-24	26942

Compact A2B with Stowage Cut-out, Install/Adjustment Instructions (Kit: 28375)

The purpose of the Stowage Cut-out system is to prevent a situation whereby the wire rope is over-tensioned when the load block / wire rope is attached to the stowage hook on the bottom of the primary boom assembly. ***However, the OPERATOR is ultimately responsible for ensuring that the wire rope is not over-tensioned when stowing the wire rope and boom assembly into the boom rest.***

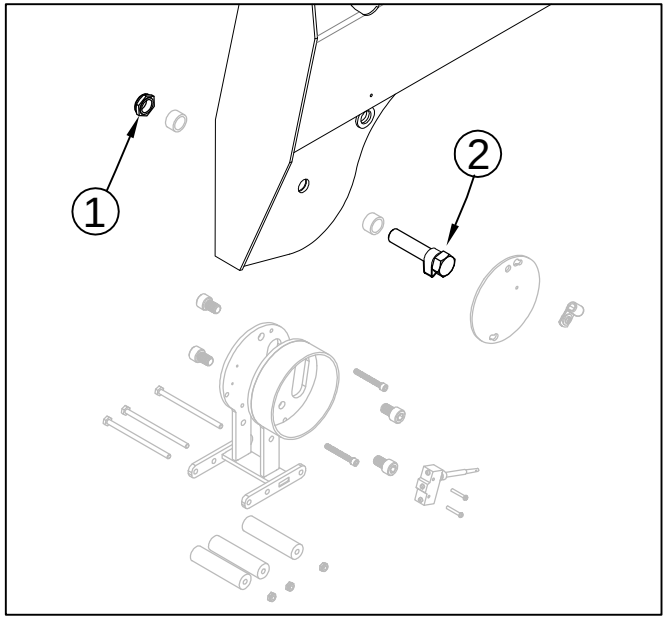

1. Initially, apply a light torque to the nyloc full nut Item #1 (P/N !LNUT-07510), such that the axle bolt & cam welded assembly can be rotated / adjusted in the steps below.
2. Position the cam ***lobe*** Item #2 (P/N 28362) so that it is pointing towards the housing / mechanism
3. Hang the load block on the open stowage hook under the primary boom.
4. Thread the wire rope through the load block in a two-line configuration; the wire rope end / eyelet is pinned in the standard position on the tertiary boom tip
5. Actuate the Winch Up function until the load block and wire rope are ***taut*** enough to prevent the load block from bouncing during transit, ***but do not tighten excessively so as to prevent damage to the wire rope.***
6. Rotate the axle bolt & cam welded assembly towards the housing (clockwise in standard configuration) until the cam lobe makes contact with and trips the wobble micro switch and actuates the A2B function.
7. Once adjusted, torque the nyloc full nut (Item #1) to 100 ft*lbs to prevent further rotational movement of the axle bolt & cam welded assembly.
8. Test the A2B trip-point by slackening and tightening the wire rope / load block assembly by actuating Winch Up/Down. ***NOTE: The point at which the A2B trips WILL vary to some degree, depending upon the winch up speed. It is recommended to actuate the winch up function slowly, which will yield a consistent and repeatable result, in terms of wire rope tension when stowed.***

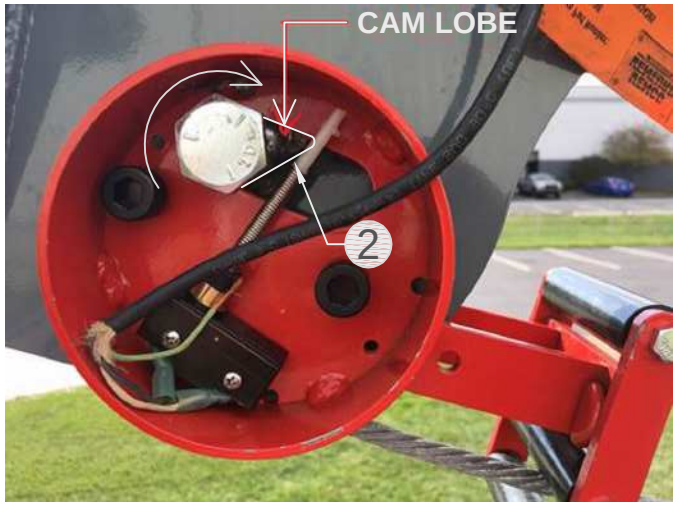

Contact Venturo Tech Support for assistance. 1-800-226-2238 ext. 124

REPLACEMENT PARTS DIAGRAM; 19814 WINCH

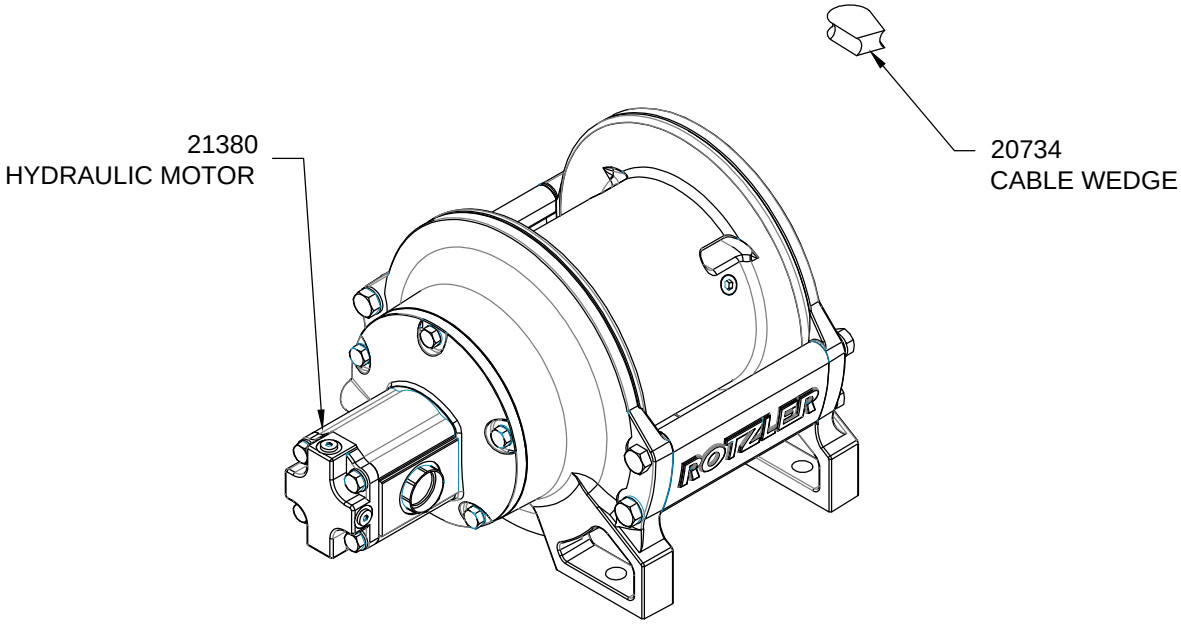

ROTZLER TH SERIES

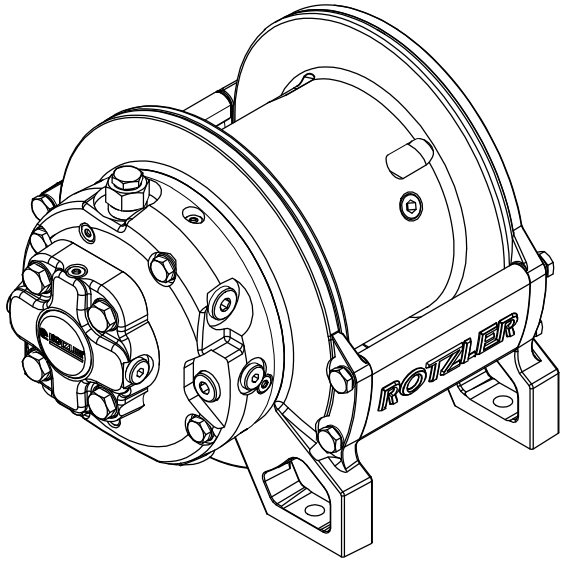

ROTZLER TI SERIES

ROTZLER TH SERIES	ROTZLER TI SERIES
MOTOR P/N: 21380	CALL VENTURO TECH SUPPORT
SEAL KIT: 21381	CALL VENTURO TECH SUPPORT
MOTOR SEAL: 21382	CALL VENTURO TECH SUPPORT

REPLACEMENT PARTS DRAWING; HYDRAULIC COMPONENTS, HT25/30 VLC

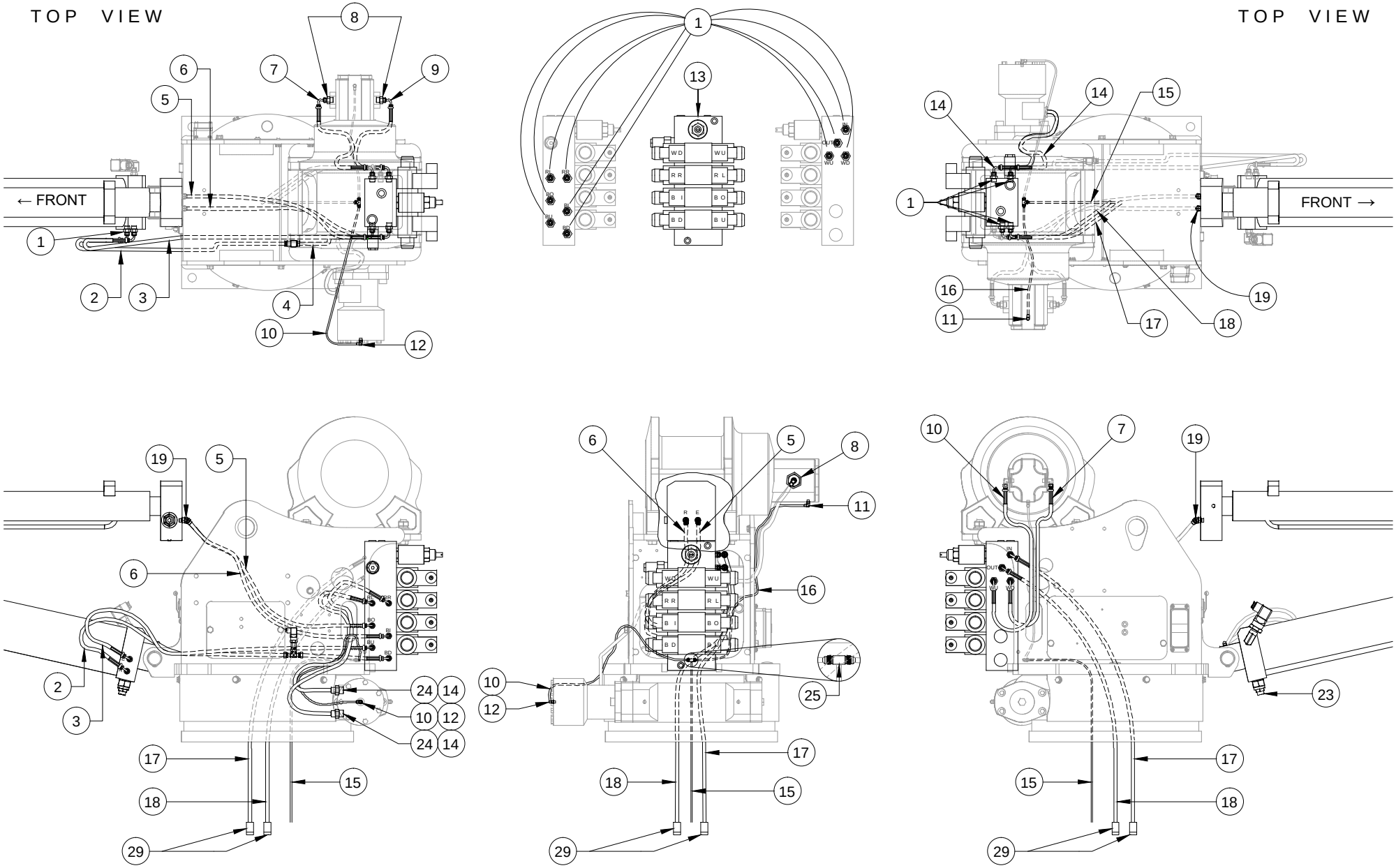

REFERENCE #26980 FOR REPLACEMENT PARTS LIST

ILLUSTRATIONS ARE FOR REFERENCE ONLY

VENTURO® VENCO VENTURO INDUSTRIES LLC CINCINNATI, OHIO	TITLE RPLCMNT PARTS DWG; HYD. COMPONENTS	DATE 07-08-24	SECTION C400
	HT25/30 VLC CRANES	SUPERSEDES -	26979

REPLACEMENT PARTS LIST; HYDRAULIC COMPONENTS, HT25/30 VLC CRANES

ITEM	PART NO.	QTY	DESCRIPTION	INSTALLATION
1	FF6400-0606	12	FITTING; ADAPTER, STRAIGHT, 6OFS-6MO	ALL MANIFOLD & ELEV. CYL. PORTS
2	24299	1	HOSE ASSY; BOOM DOWN, CYLINDER SIDE	TRANSDUCER TO ELEVATION CYL.
3	21761	1	HOSE ASSY; BOOM UP	MANIFOLD TO ELEVATION CYLINDER
4	24298	1	HOSE ASSY; BOOM DOWN, MANIFOLD SIDE	MANIFOLD TO TRANSDUCER
5	21766	1	HOSE ASSY; BOOM OUT	MANIFOLD TO EXTENSION CYL.
6	21765	1	HOSE ASSY; BOOM IN	MANIFOLD TO EXTENSION CYL.
7	21768	1	HOSE ASSY; WINCH DOWN	MANIFOLD TO WINCH MOTOR
8	FF3801-06-08	2	FITTING; ADAPTER, 90º ELBOW, 6OFS-8MBP	WINCH MOTOR PORTS
9	21767	1	HOSE ASSY; WINCH UP	MANIFOLD TO WINCH MOTOR
10	22953	1	HOSE ASSY; CASE DRAIN, 30" LONG	ROTATION MOTOR TO T-SHAPE FITTING
11	FF3802-4-4	1	FITTING; ADAPTER, 45° ELBOW, 4MJ-4MBP	CASE DRAIN, ROTZLER TI SERIES WINCH
12	H6801-0404	1	FITTING; ADAPTER, 90° ELBOW, 4MJ-4MO	CASE DRAIN, ROTATION MOTOR
13	22501-P-175-300	1	MANIFOLD; PROPORTIONAL	REAR OF MECHNISM
14	21771	2	HOSE ASSY; ROTATE LEFT/RIGHT	MANIFOLD TO ROTATION MOTOR
15	22903	1	HOSE ASSY; CASE DRAIN, 96" LONG	T-SHAPE FITTING TO COMPARTMENT
16	22952	1	HOSE ASSY; CASE DRAIN, 13" LONG	WINCH CASE DRAIN TO T-SHAPE FITTING
17	21764	1	HOSE ASSY; PRESSURE SUPPLY	MANIFOLD TO COMPARTMENT
18	21763	1	HOSE ASSY; RETURN SUPPLY	MANIFOLD TO COMPARTMENT
19	FF6802-0606	2	FITTING; ADAPTER, 45° ELBOW, 6OFS-6MO	EXTENSION CYLINDER PORTS
20	-	-	-	-
21	-	-	-	-
22	-	-	-	-
23	20893	2	COUNTER-BALANCE VALVE	ELEVATION & EXTENSION CYLINDERS
24	FF6400-0610	2	FITTING; ADAPTER, STRAIGHT, 6OFS-10MO	ROTATION MOTOR PORTS
25	H2603-040404	1	FITTING; ADAPTER, T-SHAPE, 4MJ-4MJ-4MJ	22952, 22953, & 22903
26	-	-	-	-
27	-	-	-	-
28	-	-	-	-
29	20684	2	LIVE SWIVEL; CONTINUOUS, 6MJ-6FJ	RETURN AND SUPPLY HOSES

* DOES NOT INCLUDE VLC-SPECIFIC COMPONENTS. PLEASE REFERENCE VLC MANUAL.

REFERENCE #26979 FOR REPLACEMENT PARTS DRAWING

22501 HYDRAULIC VALVE MANIFOLD, REPLACEMENT PARTS

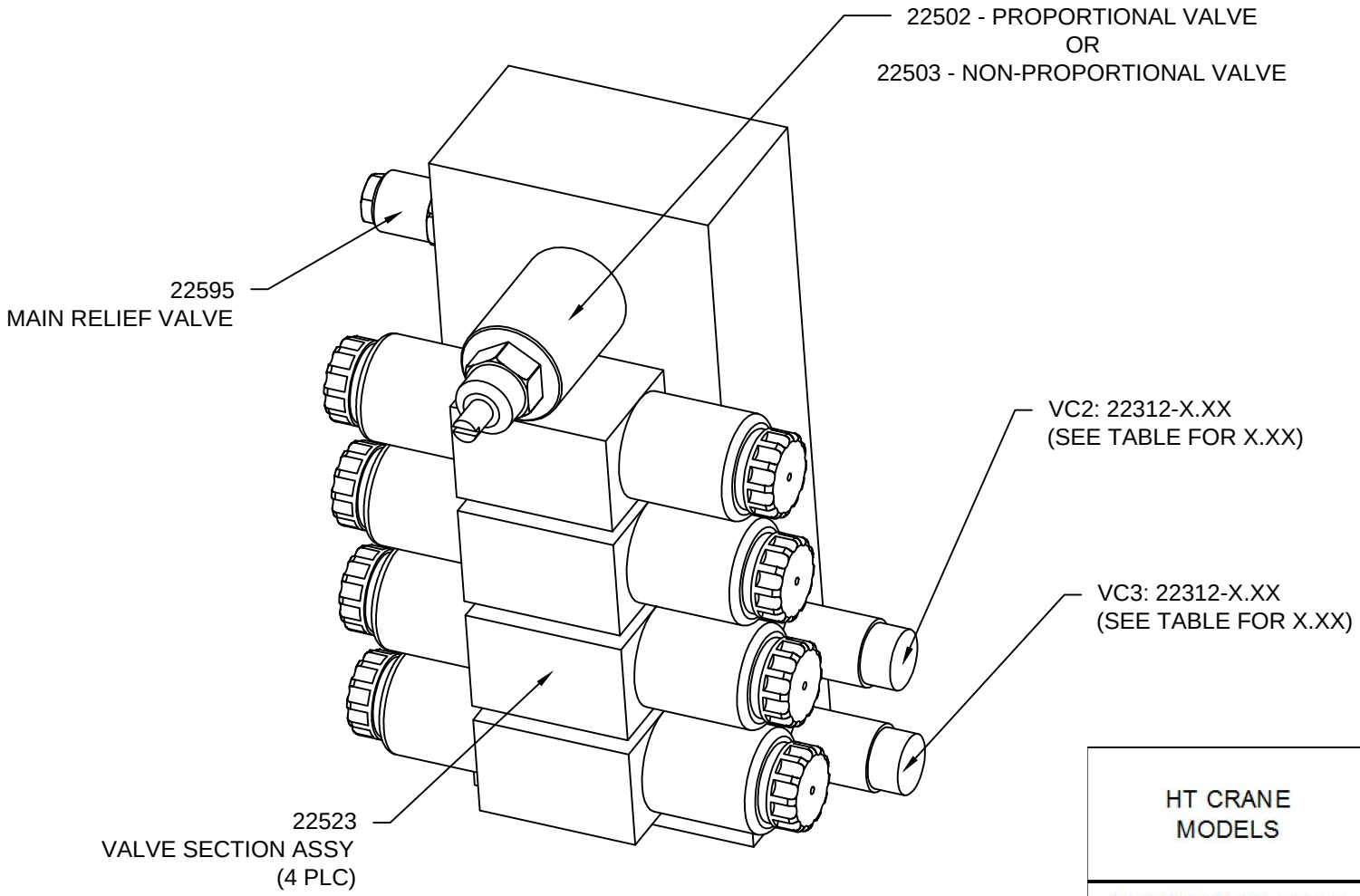

HT CRANE MODELS	PRIORITY FLOW VALVES	
	VC2	VC3
	EXTENSION	ELEVATION
HT 25/30 NON-PROP	1.00	1.75
HT 25/30 PROP	1.75	3.00
HT 40/50 NON-PROP	▲ 2.25	2.25

WORK LIGHT INSTALLATION: 28240 (3-WIRE CORD REEL ON VLC CRANES)

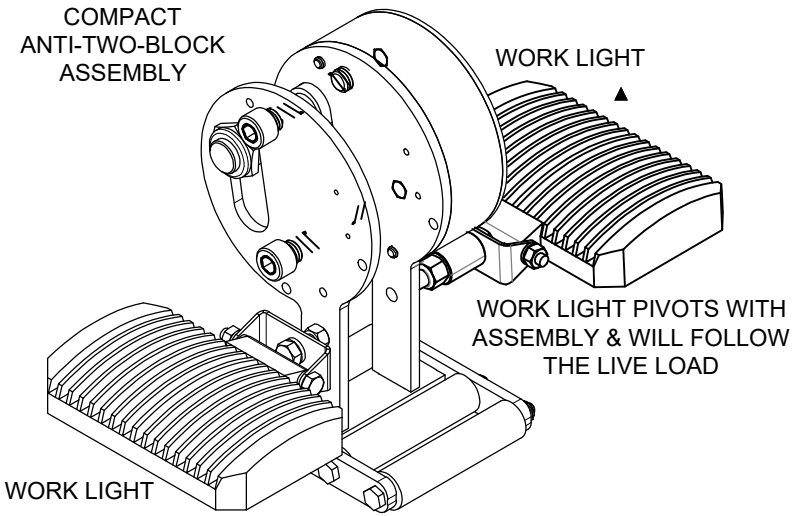

	BILL OF MATERIALS	N/D	28240
#	DESCRIPTION	QTY	PART NUMBER
1	IDWG; WORK LIGHT INSTALLATION, VLC CRANES	1	28188
▲ 2	LED WORK LIGHT	2	27483
3	TERMINAL; 16G, FEMALE, QUICK-CONNECT	5	!TERM16G250QCFI
4	TERMINAL; 16G, MALE, QUICK-CONNECT	4	!TERM16G250QCM
5	WIRE ASS'Y; 16G, BLACK, 28", #6 RING - STRIPPED END	1	22254-BLK280AO
6	WIRE ASS'Y; 16G, BLACK, 28", QCF - STRIPPED END	1	22254-BLK280GO
7	RELAY; 12VDC	1	22739
8	DECAL; WORK LIGHT RELAY	1	16184-2
9	WIRE ASS'Y; 16G, BLACK, 30", MALE PIN - QCF	2	22254-BLK300FG
▲ 10	STANDOFF; .75"OD X .38"ID X 1" LONG, ALUM. (LEFT SIDE MOUNT)	1	24496

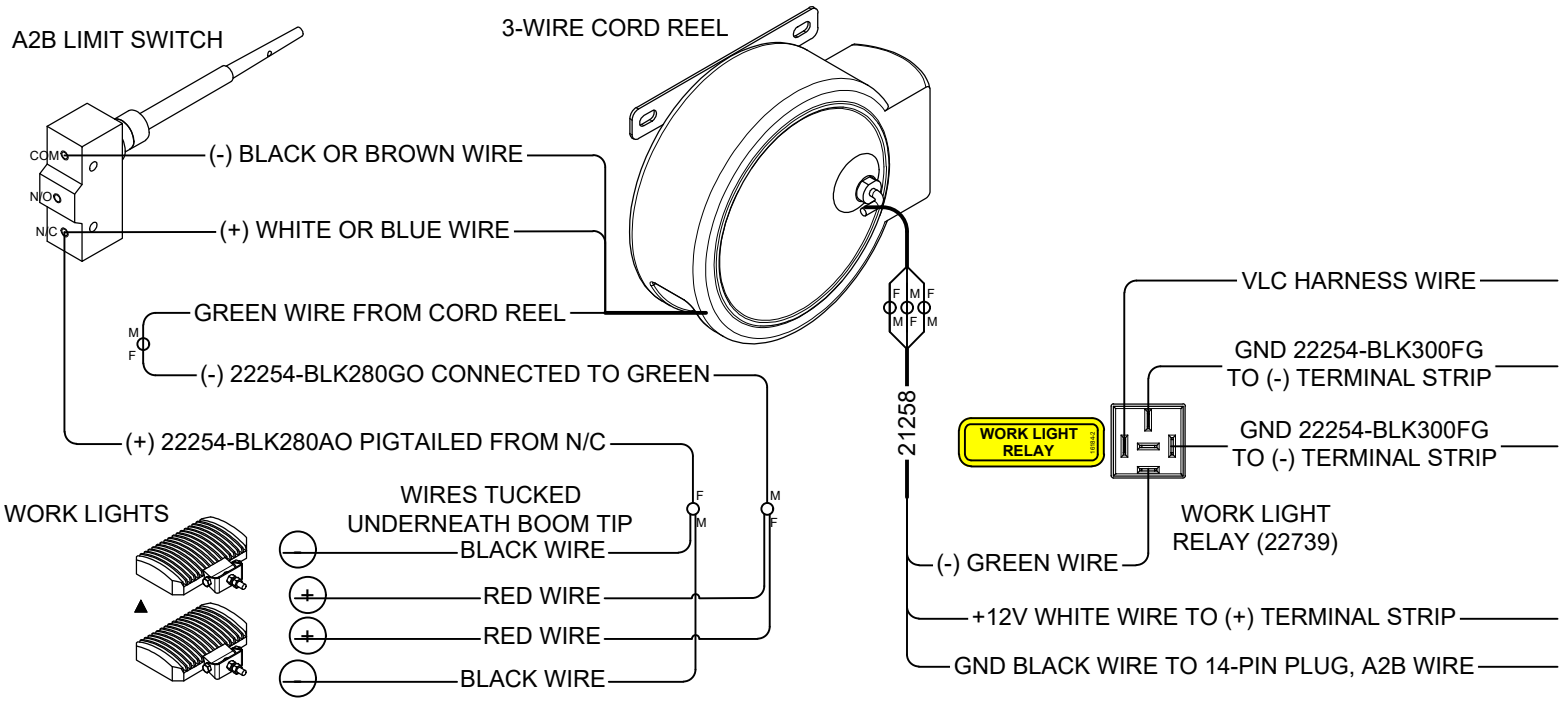

WORK LIGHT ON/OFF
LATCHED
(ON SAME TOGGLE AS HORN)

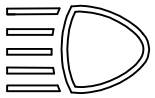

VENTURO®

VENCO VENTURO INDUSTRIES LLC
CINCINNATI, OHIO

TITLE	DATE	SECTION
WORK LIGHT INSTALLATION, 3-WIRE CORD REEL	06-06-26C	C400
VLC CRANES	SUPERSEDES 06-12-24B	28188

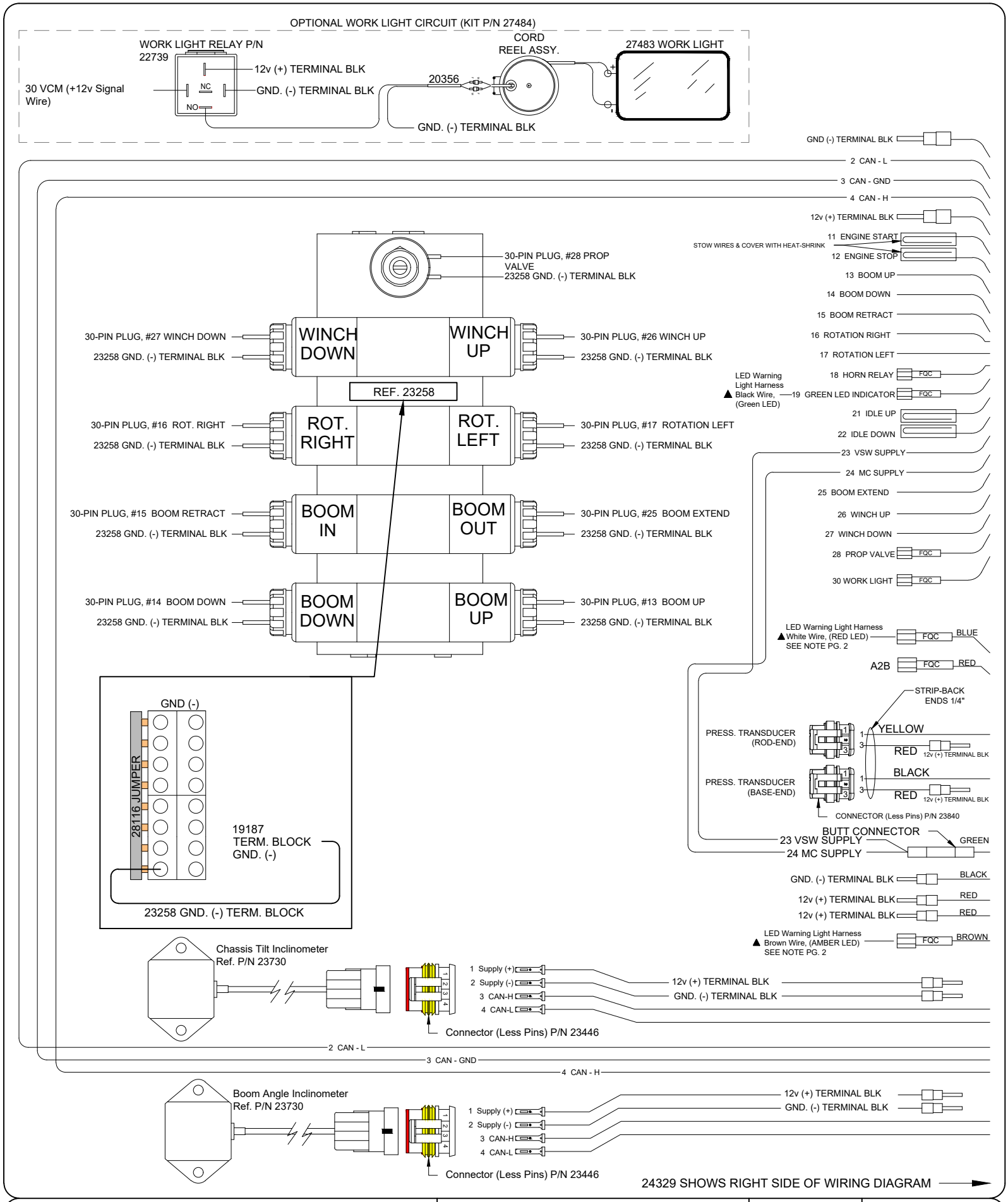

VENTURO®

VENCO VENTURO LLC
CINCINNATI, OHIO

TITLE	DATE	SECTION
WIRING DIAGRAM, PG. 1	09-24-26F	C400
HT25/30, VLC-H ("RED")	SUPERSEDES 03-24-26E	24328

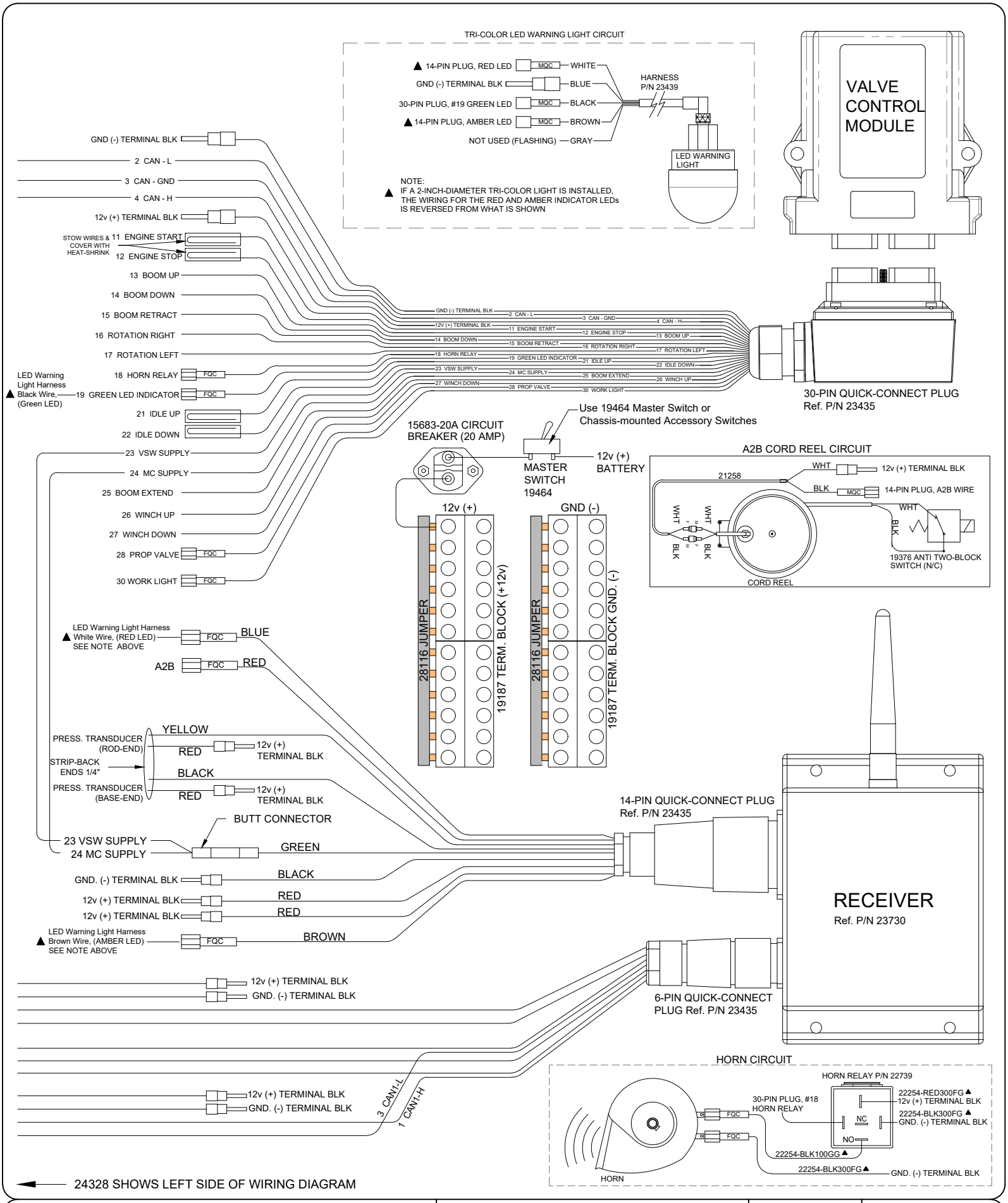

VENTURO®

VENCO VENTURO LLC
CINCINNATI, OHIO

TITLE	DATE	SECTION
WIRING DIAGRAM, PG. 2	09-24-26H	C400
HT25/30, VLC-H ("RED")	SUPERSEDES 02-26-25G	24329

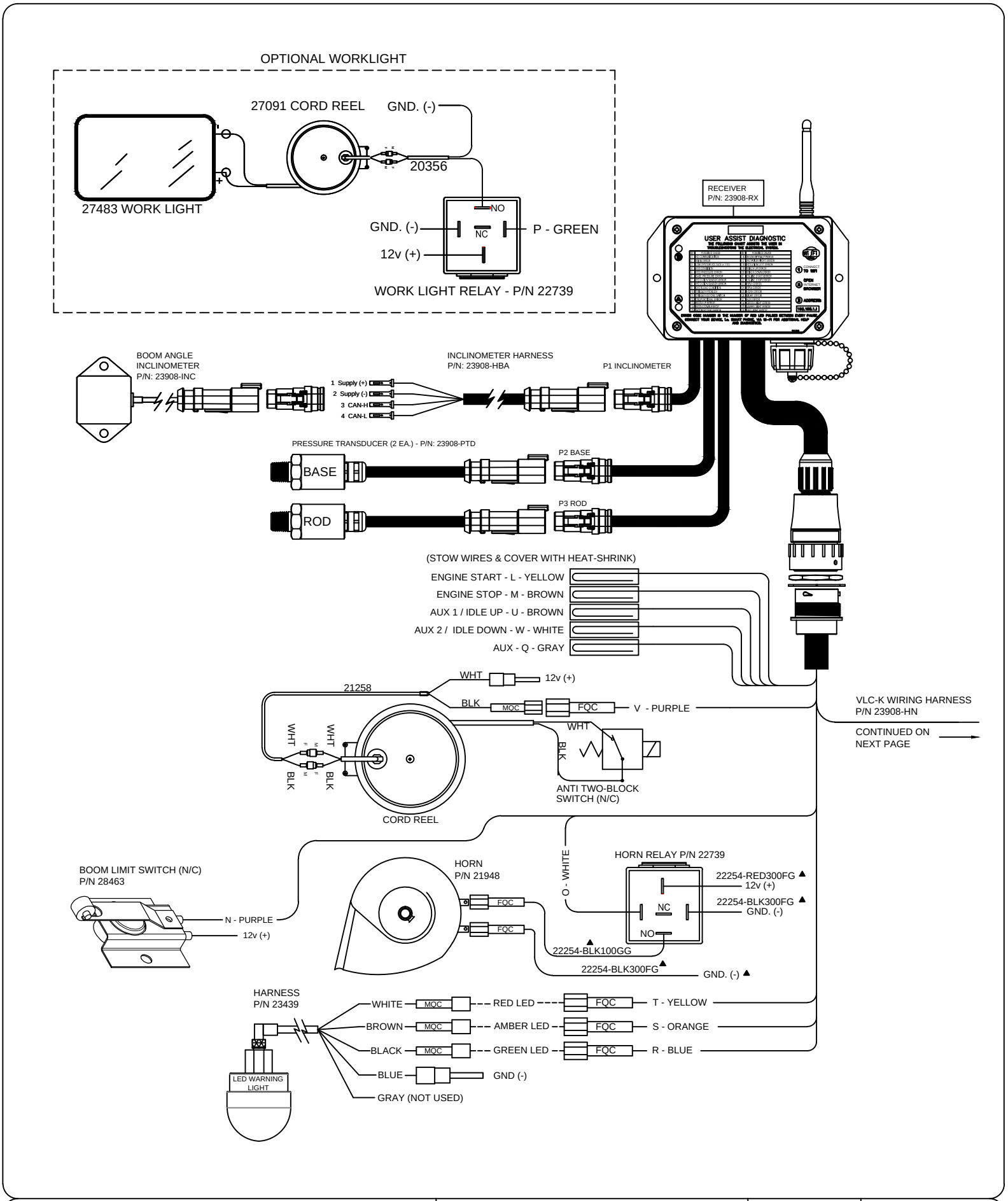

VENTURO® VENCO VENTURO INDUSTRIES LLC CINCINNATI, OHIO	TITLE WIRING DIAGRAM - PG. 1	DATE 02-25-25A	SECTION C400
	VLC-K ("ORANGE") SERIES	SUPERSEDES 06-17-24	26963

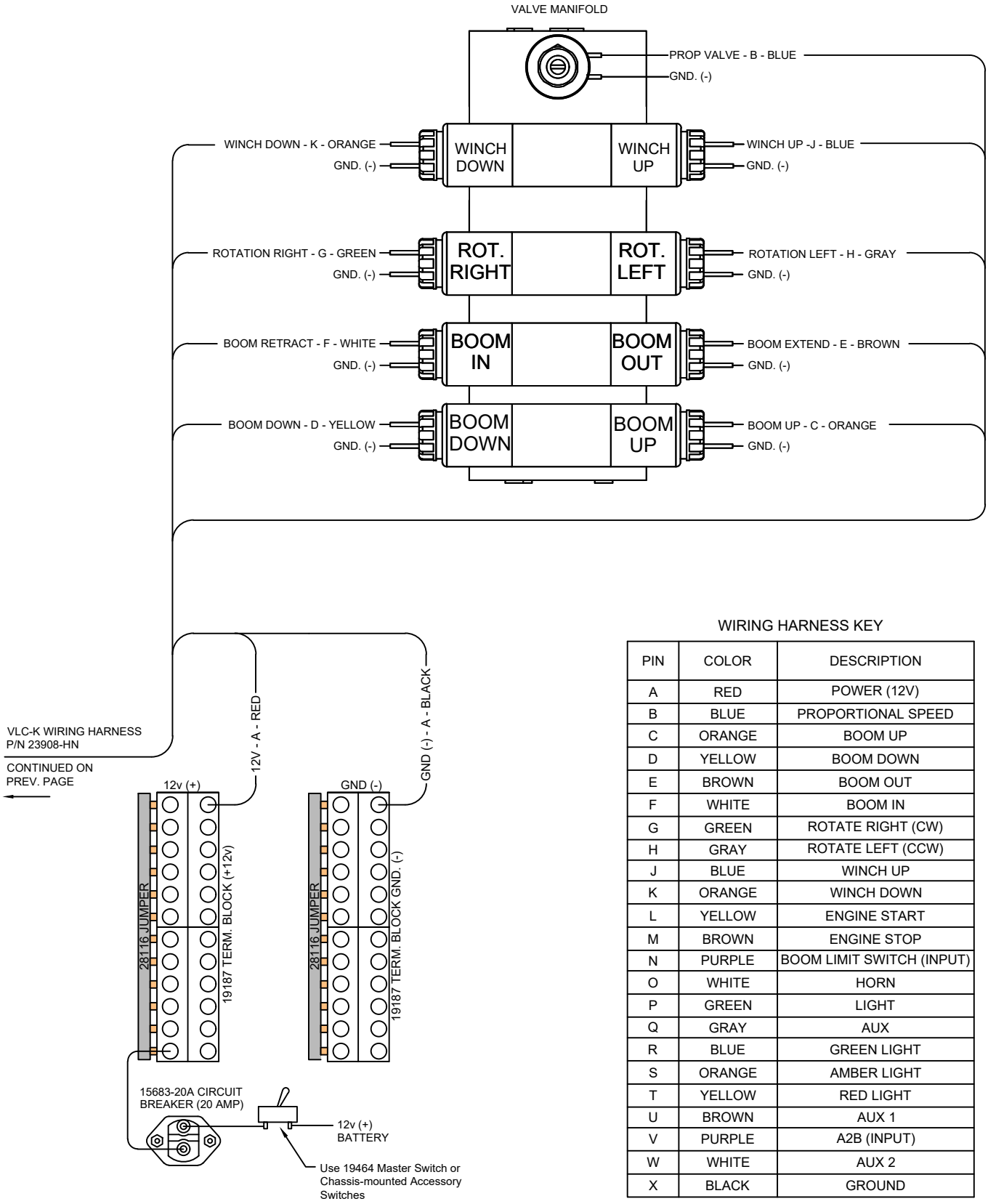

WIRING HARNESS KEY

PIN	COLOR	DESCRIPTION
A	RED	POWER (12V)
B	BLUE	PROPORTIONAL SPEED
C	ORANGE	BOOM UP
D	YELLOW	BOOM DOWN
E	BROWN	BOOM OUT
F	WHITE	BOOM IN
G	GREEN	ROTATE RIGHT (CW)
H	GRAY	ROTATE LEFT (CCW)
J	BLUE	WINCH UP
K	ORANGE	WINCH DOWN
L	YELLOW	ENGINE START
M	BROWN	ENGINE STOP
N	PURPLE	BOOM LIMIT SWITCH (INPUT)
O	WHITE	HORN
P	GREEN	LIGHT
Q	GRAY	AUX
R	BLUE	GREEN LIGHT
S	ORANGE	AMBER LIGHT
T	YELLOW	RED LIGHT
U	BROWN	AUX 1
V	PURPLE	A2B (INPUT)
W	WHITE	AUX 2
X	BLACK	GROUND

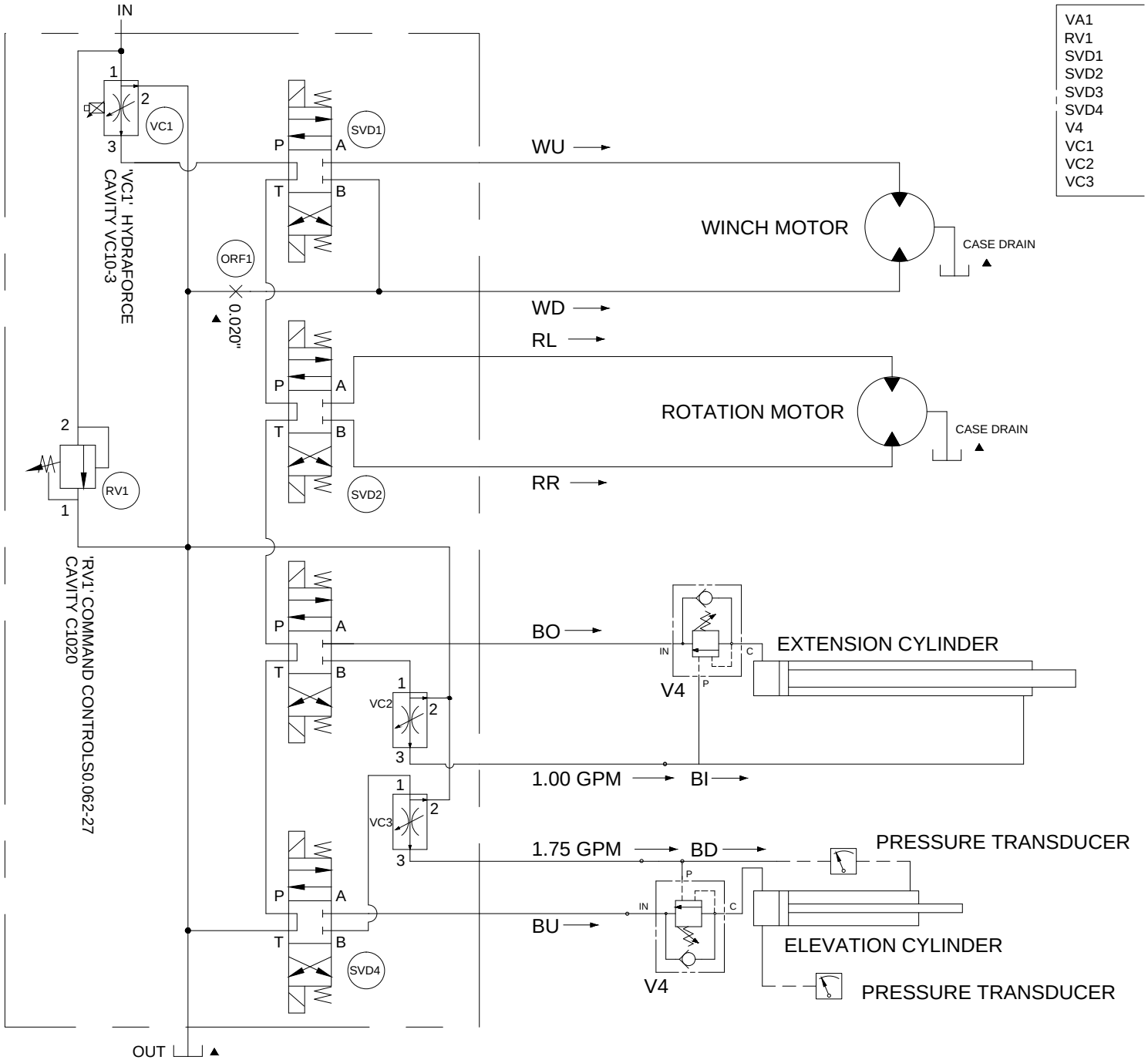

VA1	CONTROL VALVE ASSY
RV1	INLET RELIEF VALVE (3000 PSI)
SVD1	3 POSITION - 4 WAY VALVE
SVD2	3 POSITION - 4 WAY VALVE
SVD3	3 POSITION - 4 WAY VALVE
SVD4	3 POSITION - 4 WAY VALVE
V4	COUNTERBALANCE CARTRIDGE VALVE
VC1	PROPORTIONAL CONTROL VALVE (SIMPLIFIED REP)
VC2	PRIORITY FLOW REGULATOR VALVE
VC3	PRIORITY FLOW REGULATOR VALVE

VENTURO®

VENCO VENTURO INDUSTRIES LLC
CINCINNATI, OHIO

TITLE	DATE	SECTION
HYDRAULIC SYSTEM DIAGRAM	12-01-23A	C400
HT25/30 VLC SERIES	SUPERSEDES 07-22-19	24330

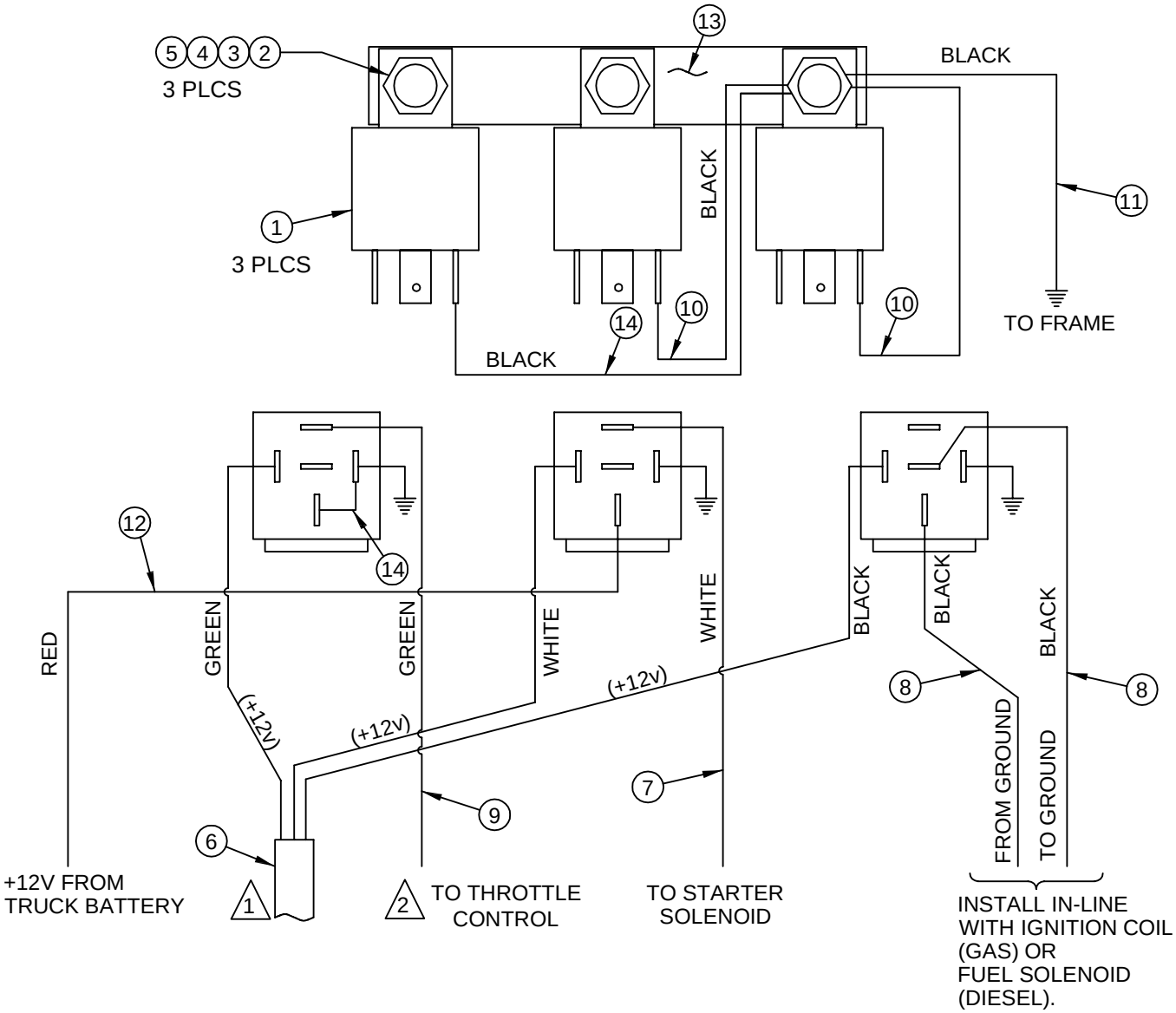

1 USER-CONTROLLED +12V INPUT SIGNALS FROM HETRONIC VLC SYSTEM OR ANALOG PENDANT OR RADIO SYSTEM

2 THROTTLE CONTROL IS DESIGNED TO PROVIDE A GROUND SIGNAL WHEN RELAY IS ACTIVATED

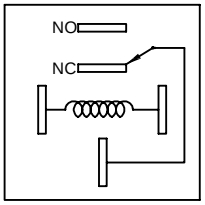

RELAY SCHEMATIC

ITEM	QTY	PART#	DESCRIPTION
1	3	22739	RELAY
2	3	!PHCS#1024075	#10-24 X 3/4 PHIL PAN HD BOLT
3	3	!LWSH-#10	#10 LOCKWASHER
4	3	!FWSH-025	#10 WASHER
5	3	!HNUT-#1024	#10 NUT
6	1	22607	WIRE HARNESS - 12/3 SJO
7	1	22609	WHITE - 16 GAGE ELECTRICAL WIRE - 15 FEET LONG
8	2	22610	BLACK - 16 GAGE ELECTRICAL WIRE - 15 FEET LONG
9	1	22611	GREEN - 16 GAGE ELECTRICAL WIRE - 15 FEET LONG
10	2	22612	BLACK - 16 GAGE ELECTRICAL WIRE - 6 INCHES LONG
11	1	22613	BLACK - 16 GAGE ELECTRICAL WIRE - 8 FEET LONG
12	1	22614	RED - 14 GAGE ELECTRICAL WIRE - 15 FEET LONG
13	1	01181	BUSS BAR
14	1	22619	BLACK - 16GA WIRE ASSY - 6" LONG W/ 3 INCH PIGTAIL

VENTURO®

VENCO VENTURO INDUSTRIES LLC
CINCINNATI, OHIO

TITLE	DATE	SECTION
ENGINE START / STOP THROTTLE CONTROL	06-09-20F	C400
HT CRANES	SUPERSEDES 02-21-14E	22615

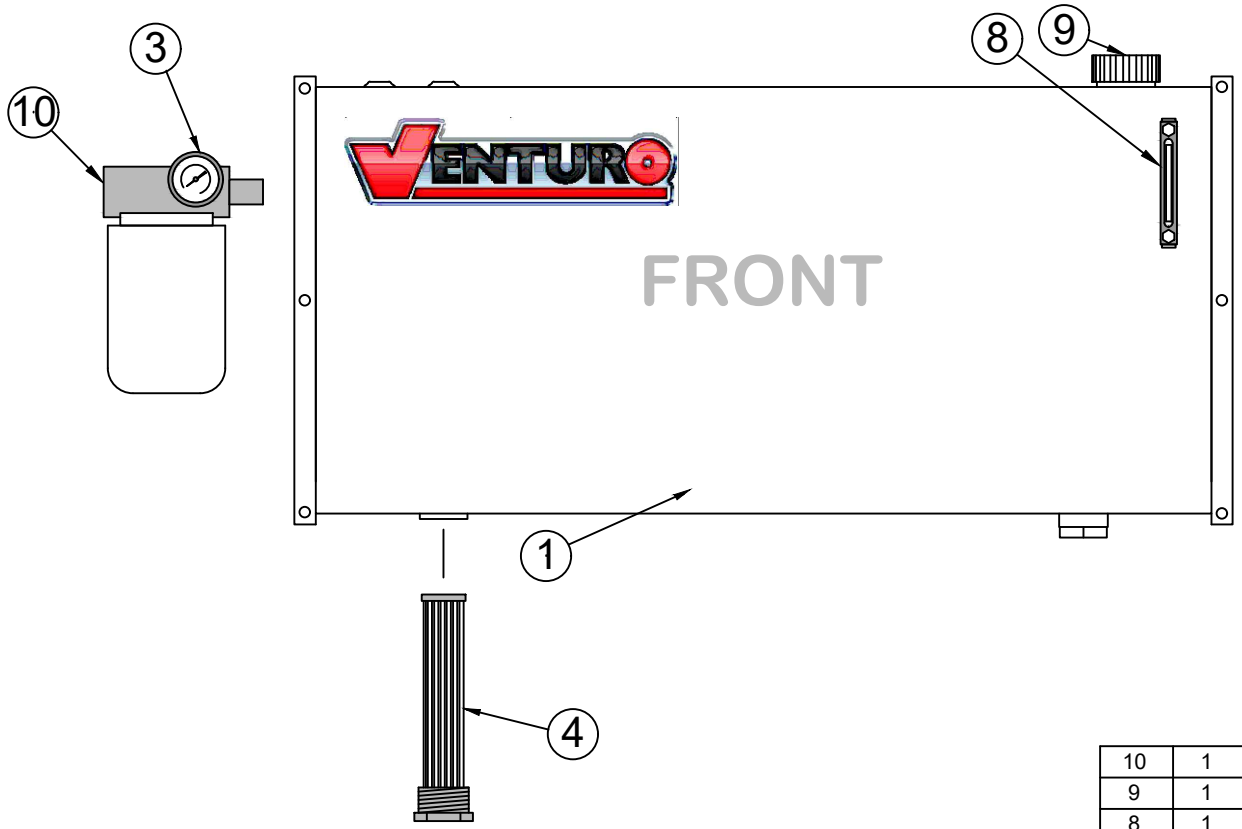

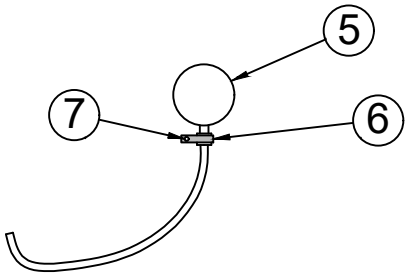

ITEM	QTY	PART NUMBERS	DESCRIPTION
10	1	19298	FILTER ASSY, RETURN
9	1	22789	FILLER / BREATHER CAP ASSEMBLY
8	1	22787	SIGHT GLASS
7	1	!HWHS02520075-F	HEX WASHER HEAD 1/4-20 X 3/4 SELF TAPPING
6	1	19275	CLAMP
5	1	22730	PRESSURE GAUGE ASSEMBLY
4	1	22788	SUCTION SCREEN - 100 MESH
▲ 3	1	VT1185	PRESSURE GAUGE - RETURN
2	-	-	-
* 1	1	22785	HYDRAULIC RESERVOIR - 25 GAL (18" x 40" x 8")
		22998	HYDRAULIC RESERVOIR - 40 GAL (20" x 42" x 11")

VENTURO®

VENCO VENTURO INDUSTRIES LLC
CINCINNATI, OHIO

TITLE	DATE	SECTION
RESERVOIR KIT REPL PARTS	04-07-26E	C400
▲ HT CRANES; 25/40/50 GAL RESERVOIR	SUPERSEDES 12-09-22D	23224

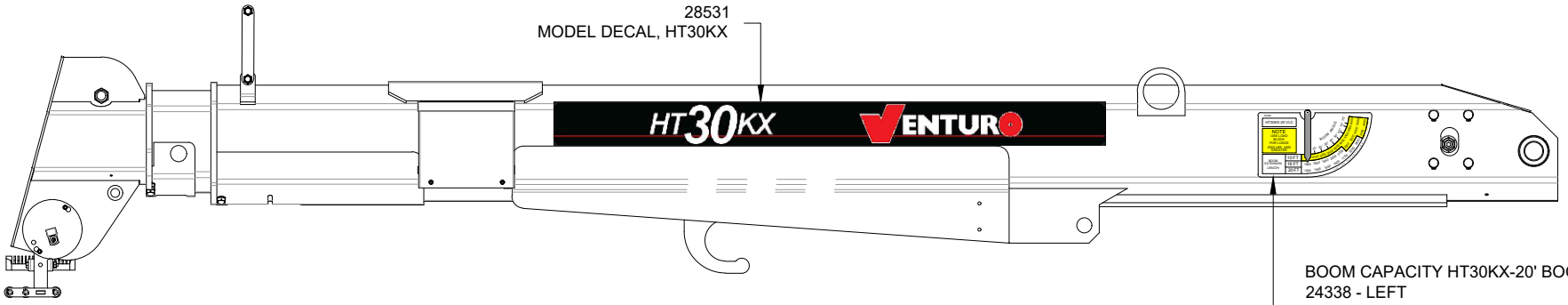

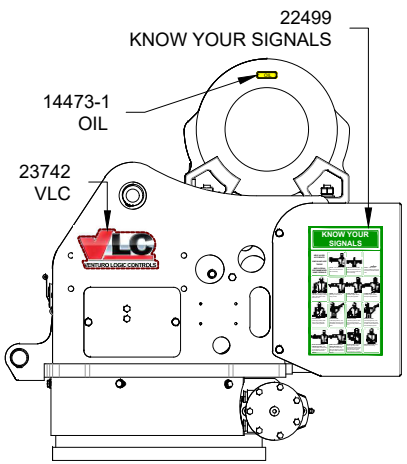

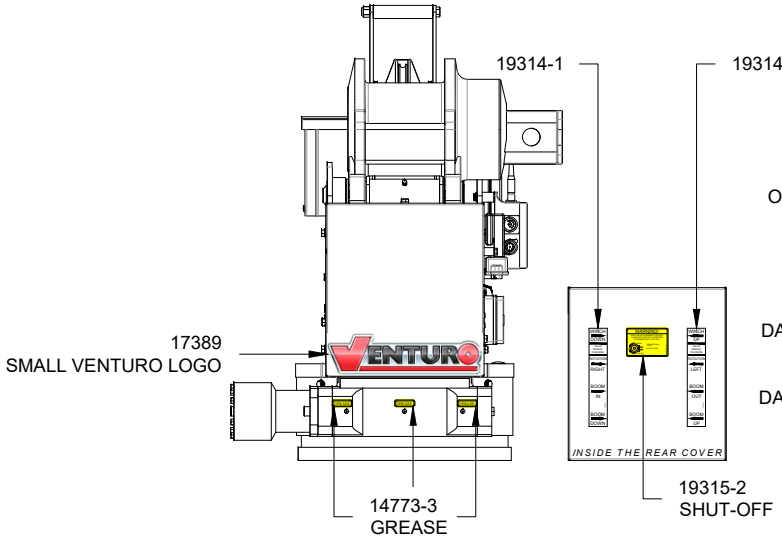

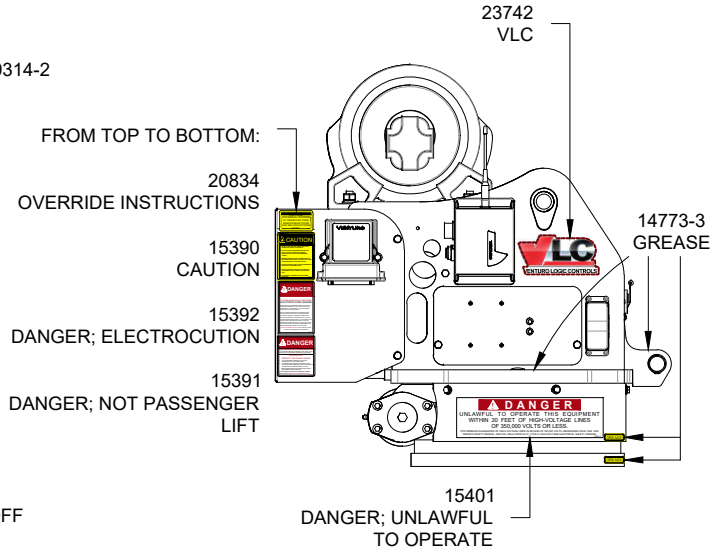

FIELD SERVICE LABEL KIT #24334

VENTURO® VENCO VENTURO INDUSTRIES LLC CINCINNATI, OHIO	TITLE DECAL PLACEMENT	DATE 11-09-23	SECTION C400
	HT30 VLC SERIES	SUPERSEDES -	24374

24350 FIELD SERVICE LABEL KIT; HT30 VLC SERIES

-20' BOOM	-25' BOOM		
QTY	QTY	PART #	DESCRIPTION
9	9	14473-3	DECAL; GREASE
1	1	19314-1	DECAL; MANUAL OVERRIDE, VALVE BLOCK, LEFT
1	1	19314-2	DECAL; MANUAL OVERRIDE, VALVE BLOCK, RIGHT
2	2	28531	MODEL DECAL; HT30KX
1	-	24339	DECAL; 20' BOOM CAPACITY, RIGHT
1	-	24338	DECAL; 20' BOOM CAPACITY, LEFT
-	1	24892	DECAL; 25' BOOM CAPACITY, RIGHT
-	1	24891	DECAL; 25' BOOM CAPACITY, LEFT
2	2	23742	DECAL; VLC
1	1	19315-2	DECAL; PROPORTIONAL VALVE OVERRIDE
1	1	22499	DECAL; KNOW YOUR SIGNALS
1	1	20834	DECAL; MANUAL OVERRIDE INSTRUCTIONS
1	1	14473-1	DECAL; OIL (WINCH SERVICING)
1	1	17389-4	DECAL; VENTURO LOGO, SMALL
1	1	16184-1	DECAL; HORN RELAY
1	1	16184-2	DECAL; WORK LIGHT RELAY
1	1	24376	IDWG; FIELD SERVICE LABEL KIT
1	1	24374	IDWG; DECAL PLACEMENT
1	1	INST-23233	SAFETY MANUAL, VENTURO CRANES
1	1	15397	KIT; ACCIDENT PREVENTION SIGNS

VENTURO CRANES LIMITED WARRANTY POLICY

Venturo products are built to last…we guarantee them.
As a purchaser of any new Venturo product covered by warranty, you will receive 1 year of the most complete coverage available…and, at no added cost to you.

1-Year Limited Warranty Policy

This limited policy warrants new products of Venturo to be free from defects in material and workmanship for a period of one (1) year from date of original installation. OEM products or accessories purchased by Venturo as part of or offered with our product will carry the OEM manufacturer's respective warranty. Our warranty covers:

- ***Repair or replacement of product***
- ***Labor to repair or replace product***
- ***Freight to return and/or replace product***

We shall not be liable for any contingent liabilities arising out of the improper function of any products. Warranty shall become void if the product is improperly installed, modified, damaged, abused or used for application other than intended use. There is no warranty of merchantability, fitness for a particular purpose, warranty arising from course of dealing or usage of trade, or any other implied or expressed warranty, except as made specifically herein. This warranty supersedes all previous warranties, written or implied.

Warranty Claims

Venco Venturo Industries LLC will make a good faith effort for prompt correction or other adjustment with respect to any product, which proves to be defective after our inspection and within the warranty period. Before any repairs are attempted or before returning any product, your Venturo Distributor is required to obtain a warranty claim number. This number is necessary for any claim to be considered. To obtain a warranty claim number, Venturo requires the model and serial number. Only authorized Venturo Distributors can perform warranty. For the name and address of your local Venturo Distributor call the **Warranty Claim Department - 513-772-8448.**

WARNING - It is the responsibility of the installer to ensure the installation is completed according to the manufacturer's recommendations, ensure the ultimate user understands how to operate product in a safe manner, and understands the need for regular service and maintenance by an authorized Venturo Distributor. No modifications or alterations may be made to any Venturo product without the expressed written consent of Venco Venturo Industries LLC. Installation of any Venturo product must be done by an authorized Venturo Distributor, to the standards of the industry; including maintenance, service and affixing of all instruction, safety and warning decals. Users should be instructed as to the safe operation at time of delivery. Maintenance, service, operation and safety warning decals are available on request from Venco Venturo Industries LLC.

VENCO VENTURO INDUSTRIES LLC
12110 BEST PLACE | CINCINNATI, OHIO 45241
P: 800-226-2238 | F: 513-326-5427
www.venturo.com