INST-28459

OWNER'S MANUAL

*HWBA*C-V*A0*

PARTS & INSTALLATION MANUAL

HT60KX SERIES

Included in this manual:

HT60KX (VLC)

- 10,000 lb Hydraulic Telescopic Service Crane
- Venturo Logic Control System (VLC-H / VLC-K) w/ Proportional Control
- 25 or 30 ft Fully-Powered, Two-Stage Boom Extension

VENCO VENTURO INDUSTRIES LLC
12110 BEST PLACE | CINCINNATI, OHIO 45241
800-226-2238

This manual also available online at www.venturo.com.

HT60KX SERIES

INST-28459 - 10/21/2026 (Rev: B10)

7607100A	SECTION 100: DESCRIPTION & SPECIFICATIONS
24449	SPECIFICATIONS & OPERATING FEATURES
28419	INSTALLATION DIMENSIONS - 25'
28420	INSTALLATION DIMENSIONS - 30'
23802	MOUNTING PLATE DIMENSIONS
28423	MAXIMUM LOAD CAPACITY CHART - 25'
28424	MAXIMUM LOAD CAPACITY CHART - 30'
7607150A	SECTION 150: SAFETY
15394	VEHICLE & CRANE ELECTRICAL HAZARD INFORMATION
920612	SAFETY & HAZARDS, GENERAL
19217	WINCH SAFETY WARNINGS
22181A	SAFETY DECALS DRAWING & LIST
22181B	SAFETY DECALS DRAWING & LIST
22181C	SAFETY DECALS DRAWING & LIST
28443	SAFETY DECALS DRAWING & LIST
28425	DECALS; BOOM CAPACITY
23748	DECALS; VENTURO LOGIC CONTROLS (VLC)
7607200A	SECTION 200: INSTALLATION
28458	CRANE INSTALLATION, PG. 1
23806	CRANE INSTALLATION PG. 2
23532	ROTATION STOP LOCATION
20906-6025	STABILITY PROCEDURE
20906-6030	STABILITY PROCEDURE
20907	STABILITY CHART
22825	22785 HYDRAULIC TANK DIMENSIONS
22883	HYDRAULIC COMPONENT INSTALLATION
23015	CONNECTIONS GUIDE (PAGE 1 OF 2)
23014	CONNECTIONS GUIDE (PAGE 2 OF 2)
22913	CONNECTIONS GUIDE (PAGE 3 OF 3)
22245	WIRE ROPE INSTALLATION
7607300B	SECTION 300: OPERATION & MAINTENANCE
23203	MAINTENANCE OVERVIEW INFORMATION
23753	CRANE OPERATION & MAINTENANCE INSTRUCTIONS (PAGE 1 OF 3)
23754	CRANE OPERATION & MAINTENANCE INSTRUCTIONS (PAGE 2 OF 3)
28436	CRANE OPERATION & MAINTENANCE INSTRUCTIONS (PAGE 3 OF 3)
26934	SAFETY SHUTOFF INSTRUCTIONS
28421	WIRE ROPE, HOOK, & LOAD BLOCK INFO
7607400A	SECTION 400: REPLACEMENT PARTS
28513	REPLACEMENT PARTS DRAWING; MECHANISM
28514	REPLACEMENT PARTS LIST; MECHANISM
28515	REPLACEMENT FASTENER DRAWING; MECHANISM
28516	REPLACEMENT FASTENER LIST; MECHANISM
26951	REPLACEMENT PARTS DRAWING; 26593 25' BOOM
26952	REPLACEMENT PARTS LIST; 26593 25' BOOM
26953	REPLACEMENT FASTENER DRAWING; 26593 25' BOOM
26954	REPLACEMENT FASTENER LIST; 26593 25' BOOM
26955	REPLACEMENT PARTS DRAWING; 26590 30' BOOM
26956	REPLACEMENT PARTS LIST; 26590 30' BOOM
26957	REPLACEMENT FASTENER DRAWING; 26590 30' BOOM
26958	REPLACEMENT FASTENER LIST; 26590 30' BOOM
26942	REPL PARTS DWG & LIST - 27469-L-C-11 ANTI-TWO-BLOCK
28239	A2B STOWAGE CUT-OUT
27332	REPLACEMENT PARTS DIAGRAM; WINCH
28517	REPLACEMENT PARTS DRAWING; HYDRAULIC COMPONENTS
28518	REPLACEMENT PARTS LIST; HYDRAULIC COMPONENTS
22940	REPLACEMENT PARTS DIAGRAM; 22736H HYDRAULIC VALVE MANIFOLD
28188	WORK LIGHT INSTALLATION INSTRUCTIONS; COMPACT A2B MOUNT
26963	WIRING DIAGRAM, PG. 1 - VLC-K ("ORANGE")
26964	WIRING DIAGRAM, PG. 2 - VLC-K ("ORANGE")
23436	WIRING DIAGRAM, PG. 1 - VLC-H ("RED")
23437	WIRING DIAGRAM, PG. 2 - VLC-H ("RED")
23822	HYDRAULIC SYSTEM DIAGRAM
22615	ENGINE START/STOP/THROTTLE CONTROLS
23224	RESERVOIR KITS; REPLACEMENT PARTS DRAWING & LISTS
28442	DECAL PLACEMENT
28441	FIELD SERVICE LABEL KIT
12-00073_VNT1	WARRANTY PAGE

SECTION 100

DESCRIPTION

&

SPECIFICATIONS

VENCO VENTURO INDUSTRIES LLC
CINCINNATI, OHIO

SPECIFICATIONS

PTO-driven hydraulic system

12-volt electrical controls (e.g. valve coils)

60,000 ft-lb overturning moment (or as limited by truck stability)

Venturo Logic Controls (VLC) crane control management system

Hydraulic winch - 5,000 lb single-line capacity with automatic load brake

Hydraulic boom elevation

Hydraulic boom extension

Hydraulic 400° rotation

VLC radio remote control pendant

In-compartment electrical control panel (optional)

Accessories (optional):

Stabilizers: 25100-CD, 25500-PHX(D), 26100-PHX(D)

Pedestal: 27656

Boom Rest: 20381-1, VT1199

TELESCOPIC BOOM	11.5 - 24.5 ft	13.5 - 29.8 ft ▲
BOOM ELEVATION	-5° TO 75°	-5° TO 75°
BOOM HYD EXTENSION	13.0 ft	16.3 ft
BOOM MANUAL EXT	-	-
CAPACITY	2100 lb @ 25.0 ft	1750 lb @ 30.0 ft
	10000 lb @ 5.0 ft	10000 lb @ 5.0 ft
WIRE ROPE	3/8" x 100 ft	3/8" x 125 ft

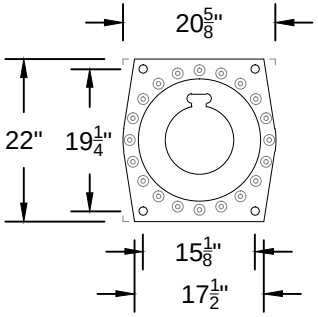

BASE MOUNTING DIMENSIONS

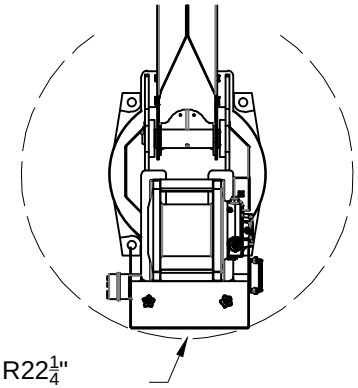

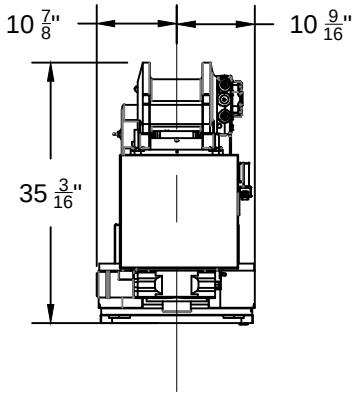

THIS SECTION SCALED 2:1 FOR CLARITY

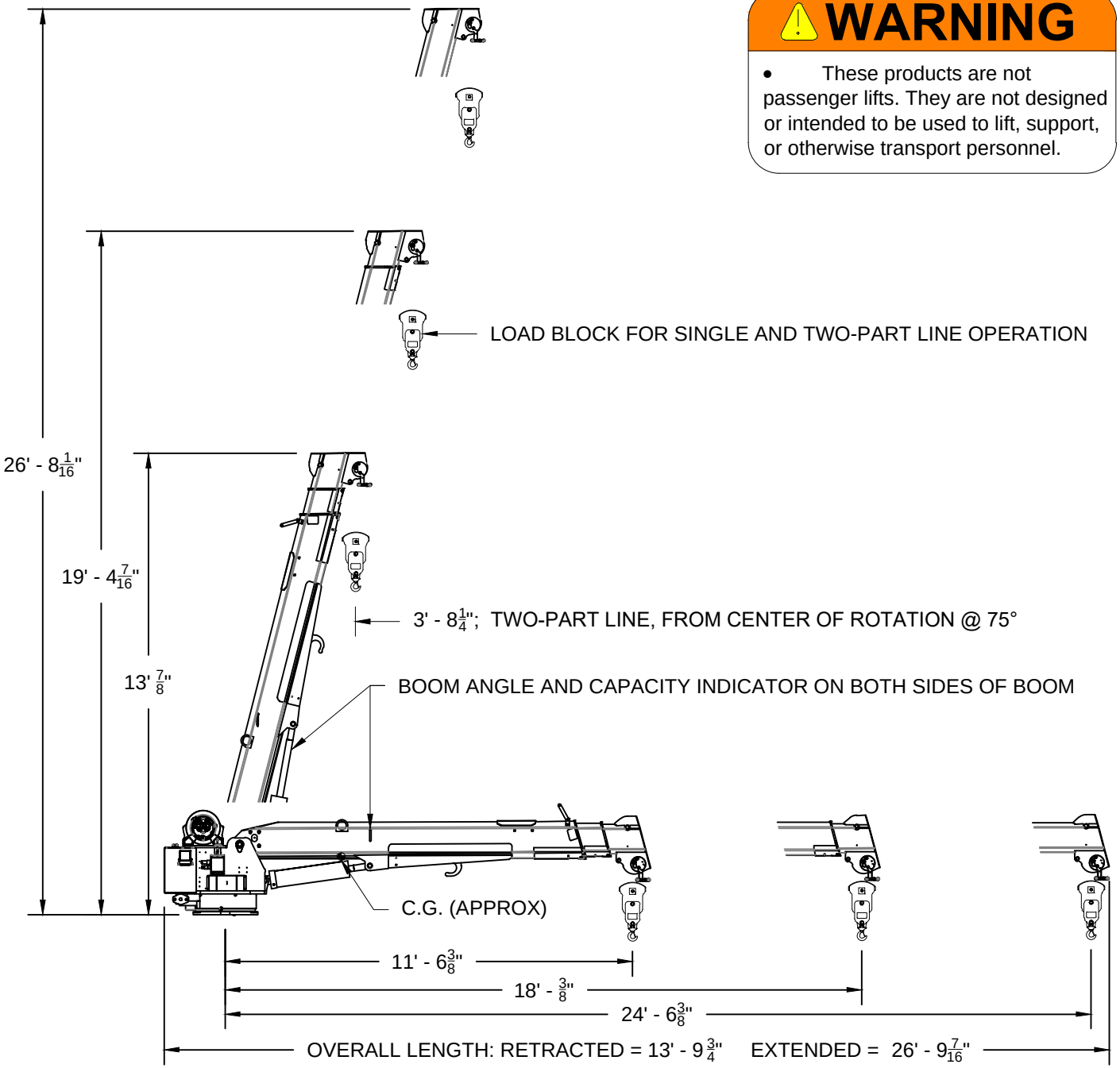

WARNING

- These products are not passenger lifts. They are not designed or intended to be used to lift, support, or otherwise transport personnel.

VENTURO®

VENCO VENTURO INDUSTRIES LLC
CINCINNATI, OHIO

TITLE	DATE	SECTION
INSTALLATION DIMENSIONS	11-18-22	C100
HT60KX-25' SERIES CRANES	SUPERSEDES -	28419

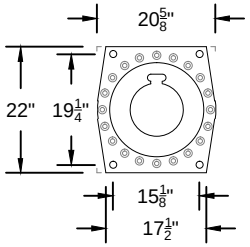

BASE MOUNTING DIMENSIONS

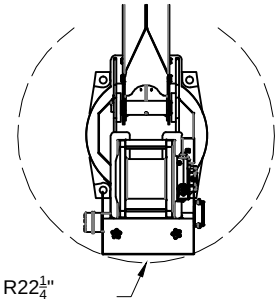

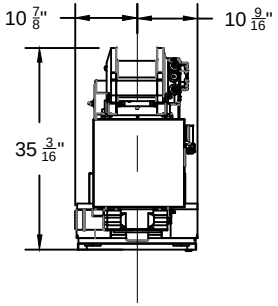

CENTER OF ROTATION

THIS SECTION SCALED 2:1 FOR CLARITY

⚠ WARNING

- These products are not passenger lifts. They are not designed or intended to be used to lift, support, or otherwise transport personnel.

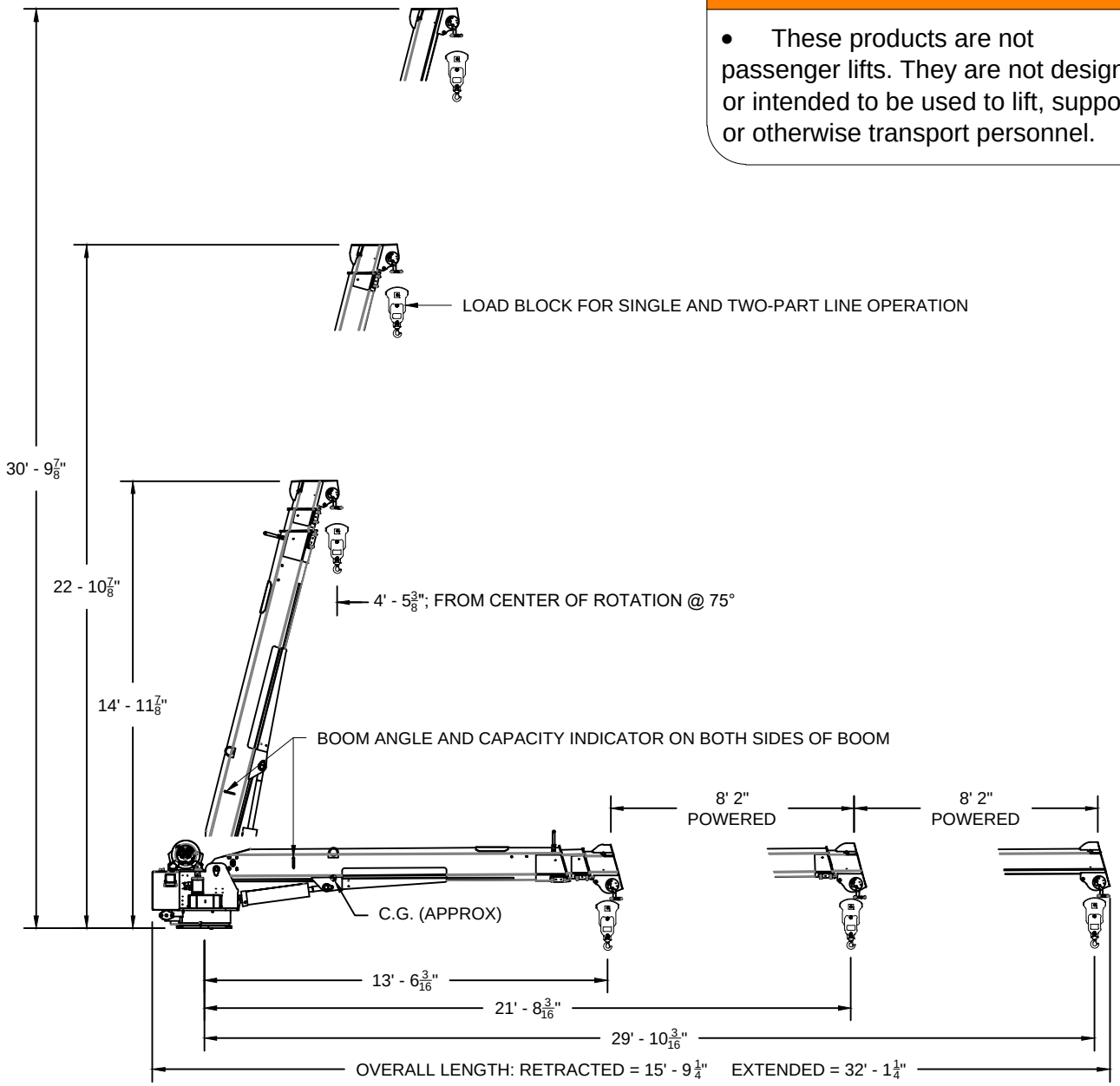

VENTURO® VENCO VENTURO INDUSTRIES LLC CINCINNATI, OHIO	TITLE INSTALLATION DIMENSIONS	DATE 11-29-22	SECTION C100
	HT60KX-30' SERIES CRANES	SUPERSEDES -	28420

HT60/66KX VLC SERIES BASE MOUNTING DIMS

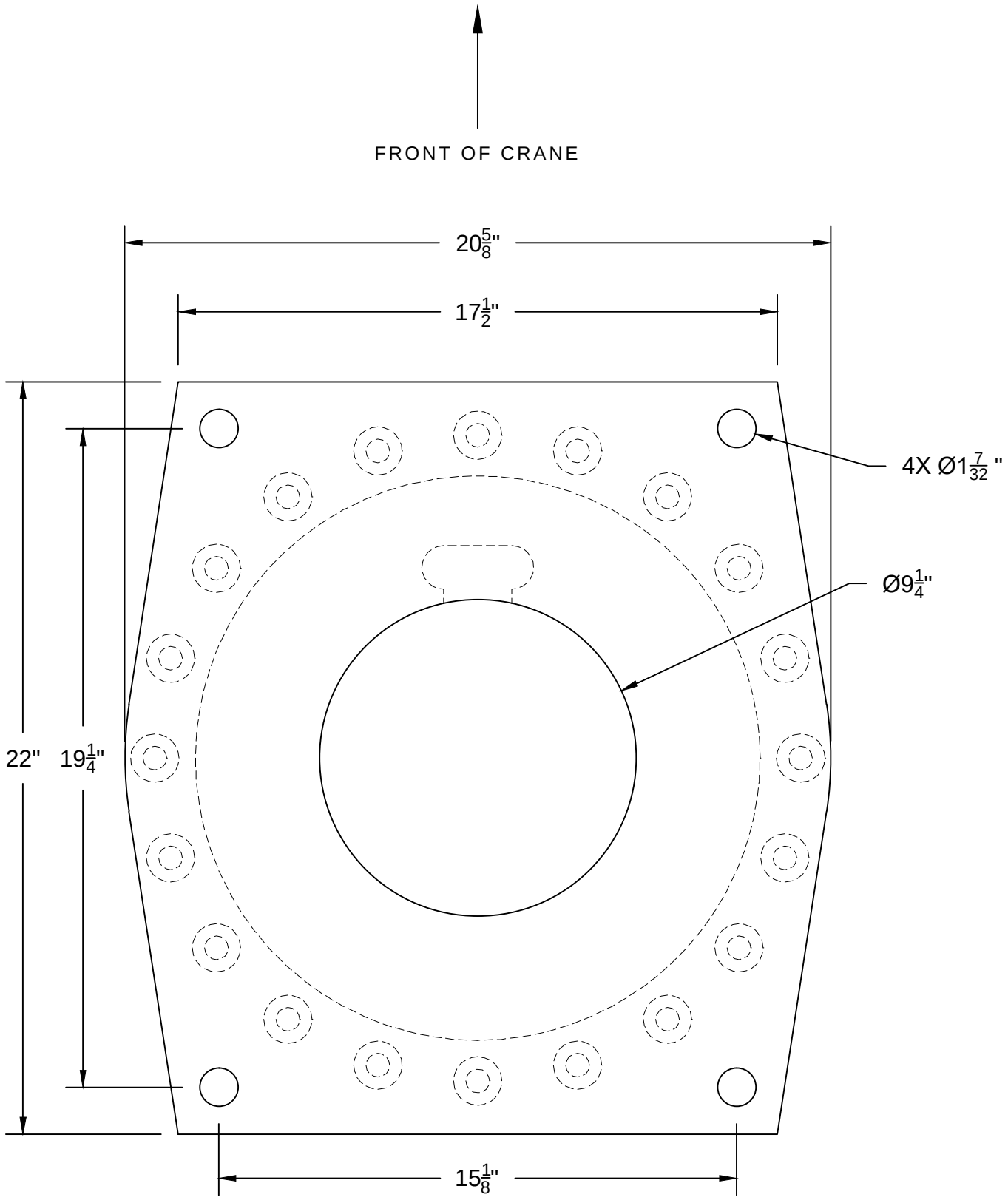

VENTURO® VENCO VENTURO INDUSTRIES LLC CINCINNATI, OHIO	TITLE BASE MOUNTING DIMS	DATE 11-10-22-A	SECTION C100
	HT60/66KX VLC SERIES	SUPERSEDES 02-06-19	23802

HT60KX, 12' - 18.5' - 25' BOOM, WITH VENTURO LOGIC CONTROL SYSTEM

CRANE SERIAL NUMBER: _____

MAXIMUM LOAD CAPACITY CHART

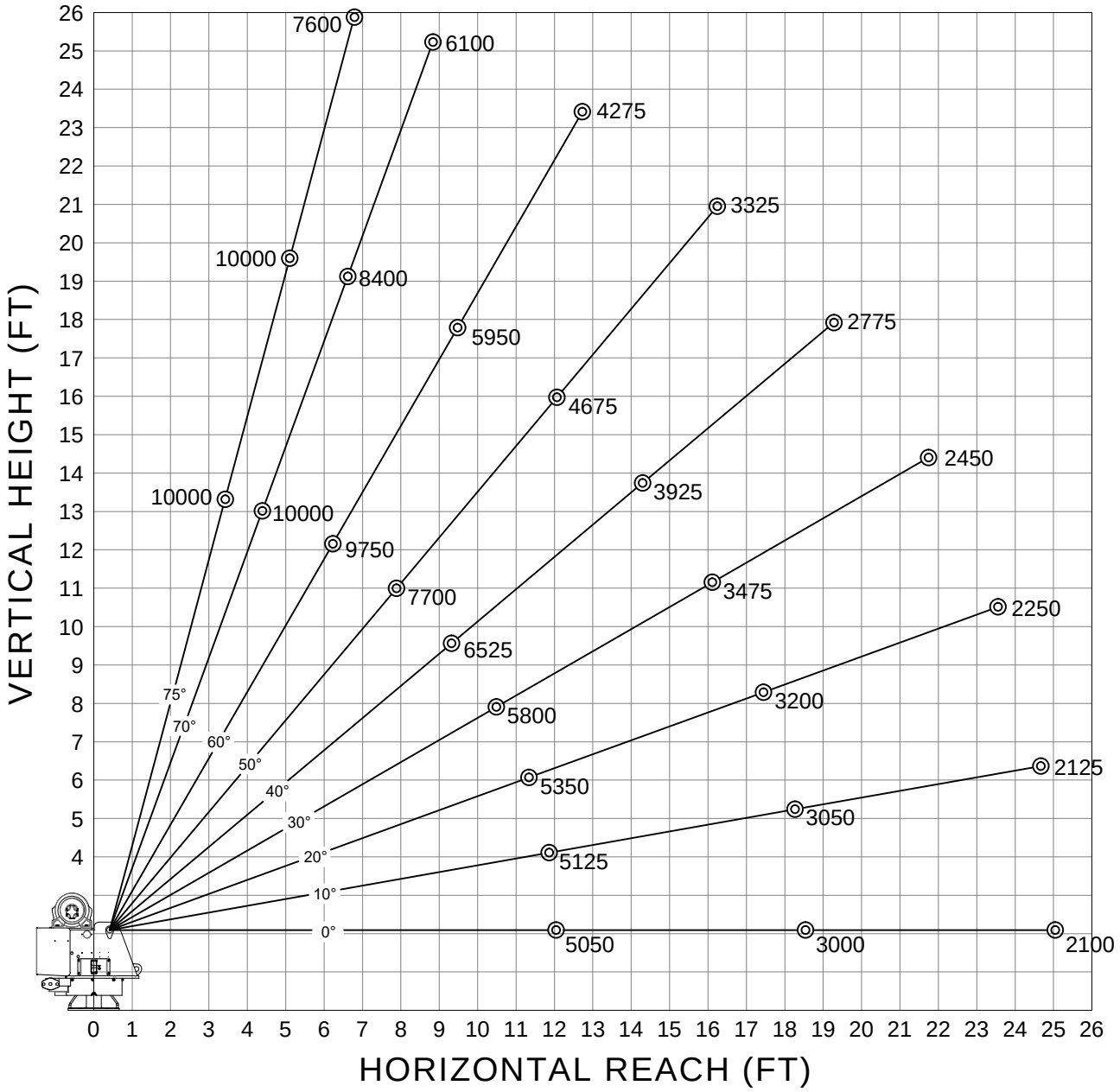

WEIGHT OF LOAD HANDLING DEVICES ARE PART OF THE LOAD AND MUST BE DEDUCTED FROM THE GROSS CAPACITY.

LOAD BLOCK USAGE

1-PART LINE FOR LOADS LESS THAN 5000 LBS

2-PART LINE FOR LOADS OF 5000 LBS AND GREATER

WEIGHT OF LOAD BLOCK = 51 LBS

VENTURO® VENCO VENTURO INDUSTRIES LLC CINCINNATI, OHIO	TITLE MAXIMUM LOAD CAPACITY	DATE 02-22-23	SECTION C100
	HT60KX-25' BOOM, VLC	SUPERSEDES -	28423

HT60KX, 13' - 22' - 30' BOOM, WITH VENTURO LOGIC CONTROL SYSTEM

CRANE SERIAL NUMBER: _____

MAXIMUM LOAD CAPACITY CHART

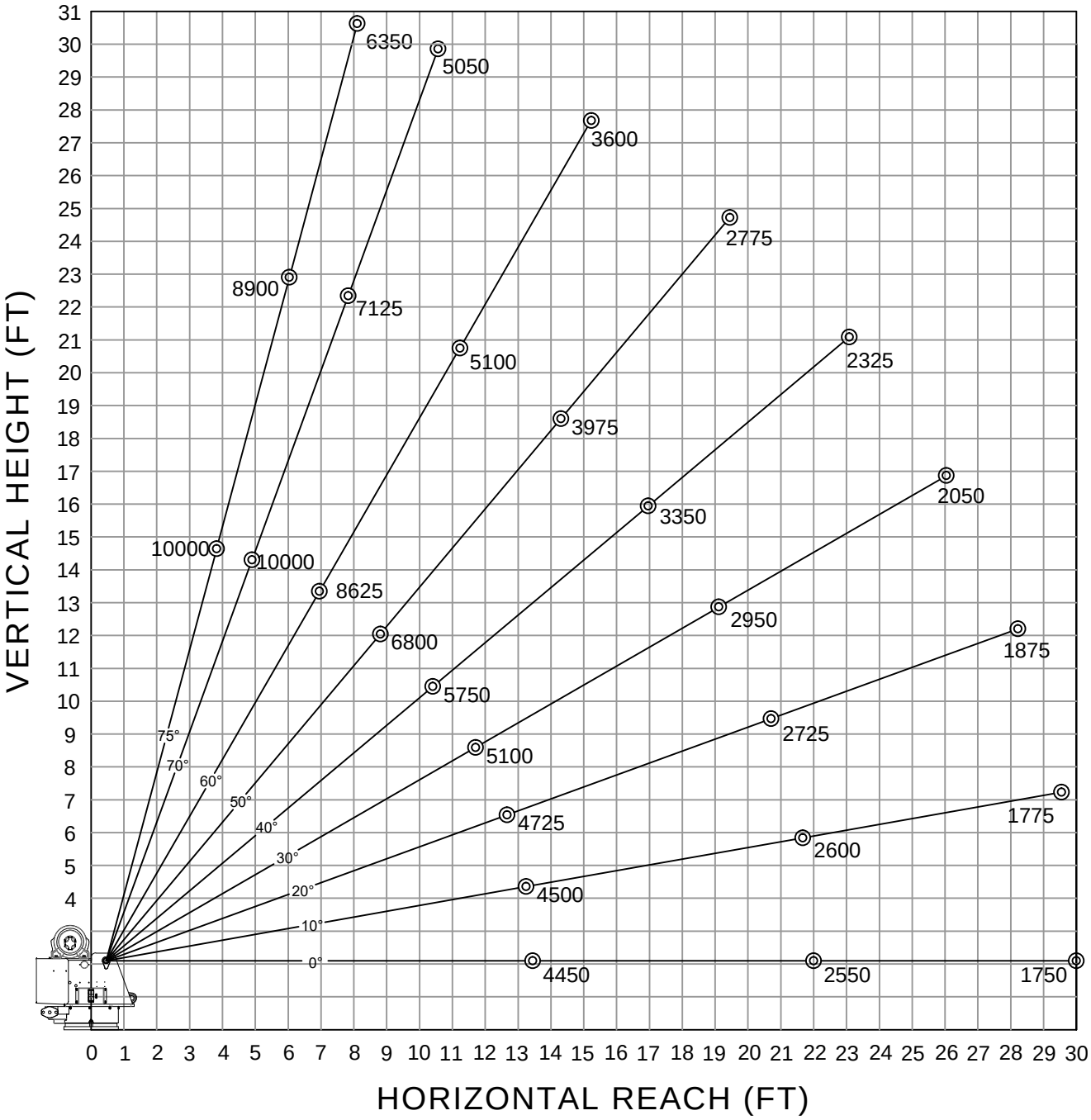

WEIGHT OF LOAD HANDLING DEVICES ARE PART OF THE LOAD AND MUST BE DEDUCTED FROM THE GROSS CAPACITY.

LOAD BLOCK USAGE

1-PART LINE FOR LOADS LESS THAN 5000 LBS

2-PART LINE FOR LOADS OF 5000 LBS AND GREATER

WEIGHT OF LOAD BLOCK = 51 LBS

VENTURO® VENCO VENTURO INDUSTRIES LLC CINCINNATI, OHIO	TITLE MAXIMUM LOAD CAPACITY	DATE 03-20-23	SECTION C100
	HT60KX-30' BOOM, VLC	SUPERSEDES -	28424

SECTION 150

SAFETY

VENCO VENTURO INDUSTRIES LLC
CINCINNATI, OHIO

7607150A

VEHICLE & CRANE MOUNTED ELECTRICAL HAZARD SIGN APPLICATION & INFORMATION

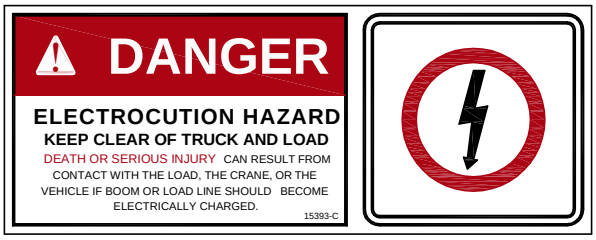

SIGN NO. 15393 DISPLAYS THE INTERNATIONAL SYMBOL FOR ELECTRICITY AND WARNS OF DANGER FROM AN ELECTRICALLY CHARGED VEHICLE, CRANE, OR LOAD. FOUR ARE RECOMMENDED (ONE FOR EACH SIDE AND ONE FOR EACH END OF VEHICLE) TO BE APPLIED IN LOCATIONS WHICH ARE READILY VISIBLE TO GROUND PERSONNEL.

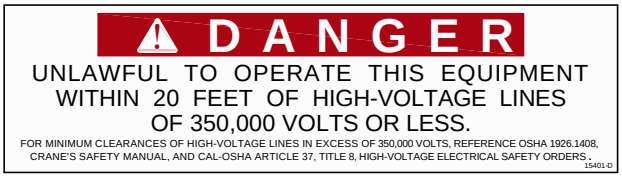

SIGN NO. 15401 PROVIDES ADDITIONAL WARNING OF LEGAL REQUIREMENTS WHEN OPERATING NEAR HIGH VOLTAGE LINES. THIS SIGN IS PLACED ON THE CONTROL PENDANT SIDE OF BOOM.

Table A - Minimum Clearance Distances

Voltage (nominal, kV, alternating current)	Minimum clearance distance (feet) *
Up to 50	10
over 50 - 200	15
over 200 - 350	20
over 350 - 500	25
over 500 - 750	35
over 750 - 1000	45
Over 1000	(as established by the utility owner/operator or registered professional engineer who is a qualified person with respect to electrical power transmission and distribution).

Table T - Minimum Clearance Distances While Traveling With No Load

Voltage (nominal, kV, alternating current)	While traveling - minimum clearance distance (feet) *
0 - 0.75	4
over 0.75 - 50	6
over 50 - 345	10
over 345 - 750	16
over 750 - 1000	20
Over 1000	(as established by the utility owner/operator or registered professional engineer who is a qualified person with respect to electrical power transmission and distribution).

* NOTE: ENVIRONMENTAL CONDITIONS SUCH AS FOG, SMOKE, OR PRECIPITATION MAY REQUIRE INCREASED CLEARANCES

CRANE SAFETY AND HAZARDS
HT SERIES CRANES

CAUTIONS

1. INSPECT VEHICLE AND CRANE, INCLUDING OPERATION, PRIOR TO USE DAILY.
2. DO NOT USE THIS EQUIPMENT EXCEPT ON SOLID, LEVEL SURFACE WITH CRANE MOUNTED ON FACTORY-RECOMMENDED TRUCK.
3. BEFORE OPERATING THE CRANE, REFER TO MAXIMUM LOAD (CAPACITY) CHART ON CRANE FOR OPERATING (LOAD) LIMITATIONS.
4. DO NOT OPERATE, WALK, OR STAND BENEATH BOOM OR A SUSPENDED LOAD.
5. ATTACH PENDANT CORD SUPPORT SNAP TO ATTACHMENT POINT BEFORE PLUGGING IN PENDANT.
6. UNPLUG PENDANT AND DISENGAGE PTO SYSTEM WHEN CRANE NOT IN USE.
7. FOR TRAVEL, BOOM MUST BE IN STOWED POSITION.

DANGER

- THIS CRANE IS NOT A PASSENGER LIFT
- IT IS NOT DESIGNED OR INTENDED TO BE USED TO LIFT, SUPPORT, OR OTHERWISE TRANSPORT PERSONNEL.

YOU MUST NOT OPERATE THIS CRANE UNLESS

1. YOU HAVE BEEN TRAINED IN THE SAFE OPERATION OF THIS CRANE
   AND
2. YOU KNOW AND FOLLOW THE SAFETY AND OPERATING RECOMMENDATIONS CONTAINED IN THE MANUFACTURER'S MANUALS, YOUR EMPLOYER'S WORK RULES, AND APPLICABLE GOVERNMENT REGULATIONS. AN UNTRAINED OPERATOR SUBJECTS HIMSELF AND OTHERS TO DEATH OR SERIOUS INJURY.

ELECTROCUTION HAZARD

- THIS MACHINE IS NOT INSULATED.
- MAINTAIN SAFE CLEARANCES FROM ELECTRICAL LINES AND APPARATUS.
- YOU MUST ALLOW FOR BOOM SWAY, ROCK OR SAG, AND ELECTRICAL LINE AND LOADLINE SWAYING.
- THIS LIFTING DEVICE DOES NOT PROVIDE PROTECTION FROM CONTACT WITH OR PROXIMITY TO AN ELECTRICALLY CHARGED CONDUCTOR.
- YOU MUST MAINTAIN A CLEARANCE OF AT LEAST 20 FEET BETWEEN ANY PART OF THE CRANE, LOADLINE, OR LOAD, AND ANY ELECTRICAL LINE OR APPARATUS CARRYING UP TO 350 kV (SEE NEW CHART). ADDITIONAL CLEARANCES ARE REQUIRED FOR VOLTAGES IN EXCESS OF 50,000 VOLTS. REFER TO DRAWING 15394 FOR ADDITIONAL INFORMATION.
- **DEATH OR SERIOUS INJURY** WILL RESULT FROM CONTACT OR INADEQUATE CLEARANCE.

WINCH SAFETY WARNINGS

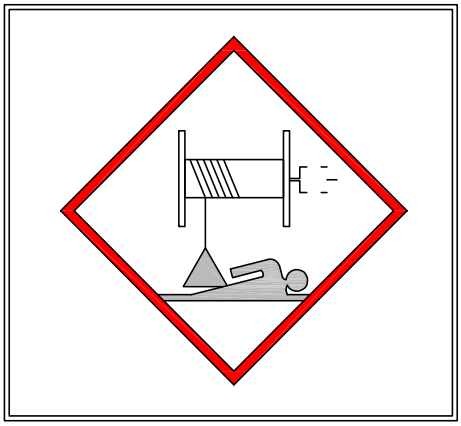

DANGER

- DO NOT DISENGAGE WINCH UNDER LOAD

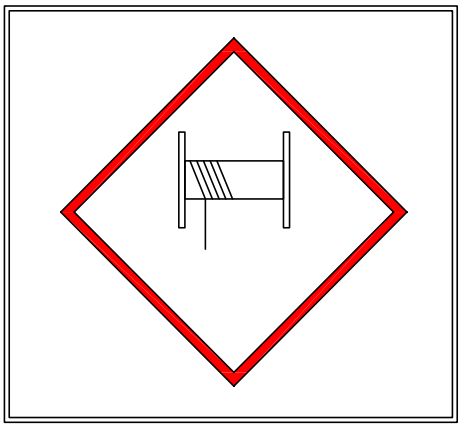

DANGER

- THE LAST [5] (DEAD) WRAPS OF WIRE ROPE MUST BE LEFT ON TO ASSIST WIRE ROPE CLAMP IN HOLDING LOAD

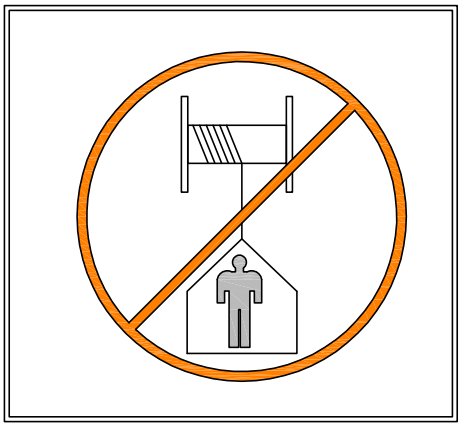

WARNING

- Winches are not to be used to lift, support, or otherwise transport personnel

PART NO.: 15398

DECAL: UNPLUG REMOTE CONTROL

FUNCTION: To inform the operator to unplug remote control when not being used.

QUANTITY: 1

PLACEMENT: Right side of housing.

PART NO.: 15401

DECAL: UNLAWFUL TO OPERATE

FUNCTION: To inform the operator of proper operation in vicinity of power lines.

QUANTITY: 1

PLACEMENT: Right side of housing.

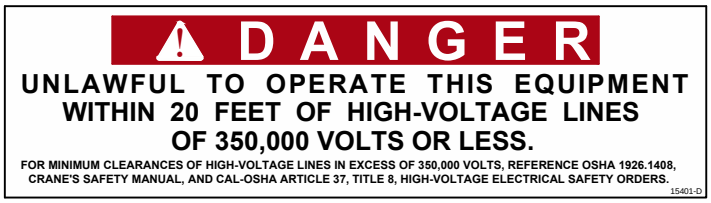

PART NO.: 19314-1 [LEFT] & -2 [RIGHT]

DECAL: MANUAL OVERRIDE (NON-PROP)

FUNCTION: To inform the operator of manual override locations.

QUANTITY: 1 EACH

PLACEMENT: Inside of rear cover.

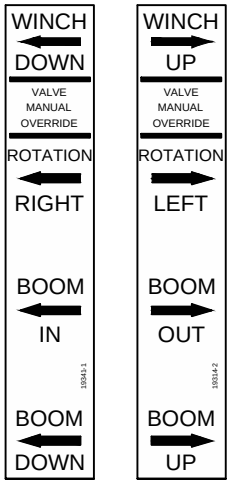

PART NO.: 22768-1 [LEFT] & -2 [RIGHT]

DECAL: MANUAL OVERRIDE (PROPORTIONAL)

FUNCTION: To inform the operator of manual overide locations.

QUANTITY: 1

PLACEMENT: Inside of rear cover.

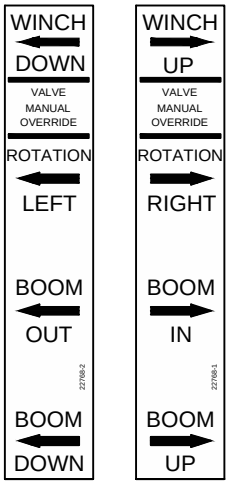

VENTURO® VENCO VENTURO INDUSTRIES LLC CINCINNATI, OHIO	TITLE DECAL DRAWING & LIST	DATE 11-30-22E	SECTION C150
	HT40/50/60/66 SERIES	SUPERSEDES 02-21-14D	22181A

▲

PART NO.: 23068-1 [LEFT] & -2 [RIGHT]

DECAL: MANUAL OVERRIDE
(HT66KXX w/ TH-2 Winch ONLY)

FUNCTION: To inform the operator of manual overide locations.

QUANTITY: 1

PLACEMENT: Inside of rear cover.

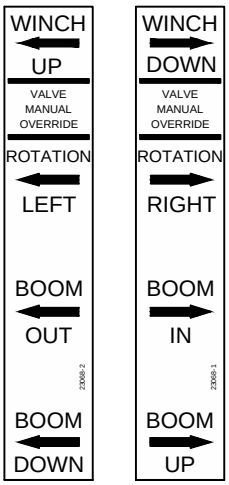

PART NO.: 19315-1

DECAL: SHUT OFF (NON-PROPORTIONAL)

FUNCTION: To show the operator how to override master shut off valve.

QUANTITY: 1

PLACEMENT: Inside rear cover.

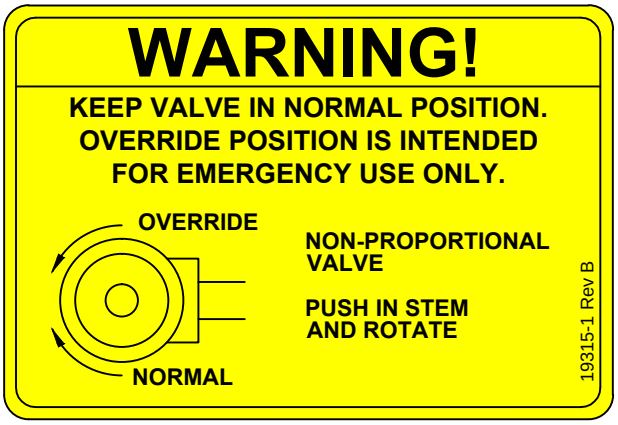

PART NO.: 19315-2

DECAL: MANUAL OVERRIDE (PROPORTIONAL)

FUNCTION: To show the operator how to override proportional valve.

QUANTITY: 1

PLACEMENT: Inside rear cover.

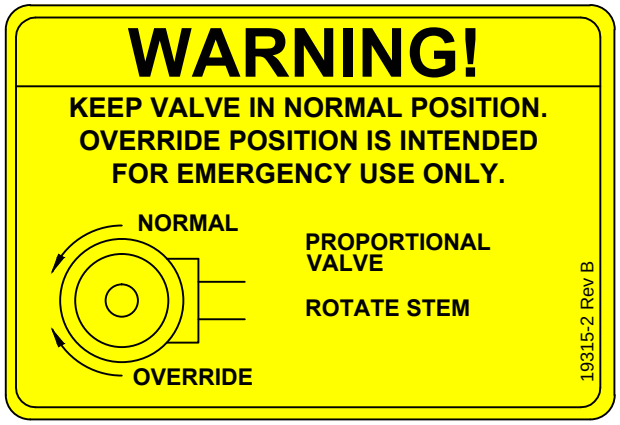

PART NO.: 20834

DECAL: MANUAL OVERRIDE NOTICE

FUNCTION: To inform the operator of manual override locations.

QUANTITY: 1

PLACEMENT: Inside rear cover.

PART NO.: 15390

DECAL: CAUTION - INSPECT VEHICLE & CRANE

FUNCTION: To inform the operator of key operating requirements.

QUANTITY: 1

PLACEMENT:Left side of rear cover.

PART NO.: 15391

DECAL: DANGER - NOT PASSENGER LIFT

FUNCTION: To inform the operator not to lift, support or transport personnel, and to ensure that crane operator is adequately trained.

QUANTITY: 1

PLACEMENT:Left side of rear cover.

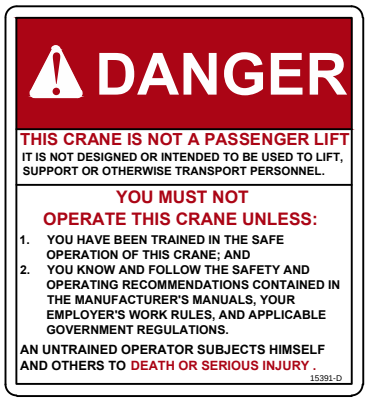

PART NO.: 15392

DECAL: DANGER - ELECTROCUTION HAZARD

FUNCTION: To inform the operator that the machine (crane) represents an electrocution hazard should it come too near or in contact with electrical voltage source.

QUANTITY: 1

PLACEMENT:Left side of rear cover.

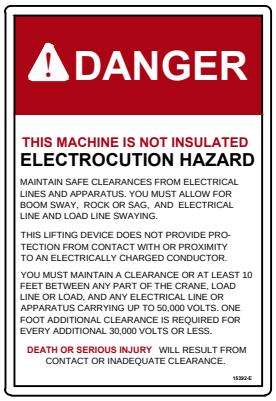

PART NO.: 22499

DECAL: KNOW YOUR SIGNALS

FUNCTION: To inform the operator of proper signals.

QUANTITY: 1

PLACEMENT:Right side of rear cover.

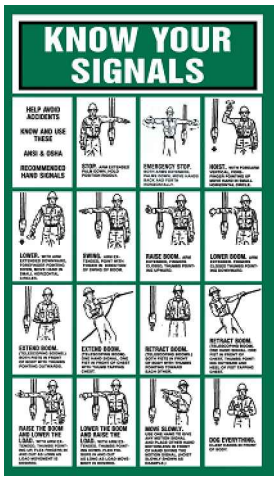

VENTURO® VENCO VENTURO INDUSTRIES LLC CINCINNATI, OHIO	TITLE DECAL DRAWING & LIST	DATE 11-30-22F	SECTION C150
	HT40/50/60/66 SERIES	SUPERSEDES 02-21-14E	22181C

PART NO.: 17389

DECAL: MEDIUM VENTURO

FUNCTION: Branding.

QUANTITY: 1

PLACEMENT: Rear cover.

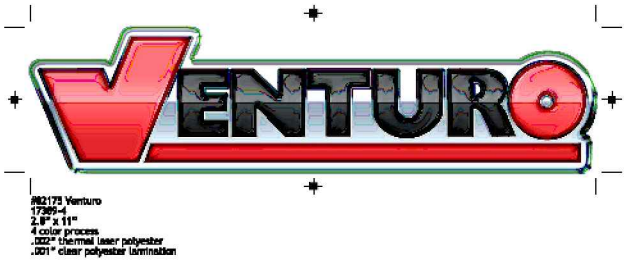

PART NO.: 24912

DECAL: HT60 MODEL DECAL

FUNCTION: Branding.

QUANTITY: 2

PLACEMENT: Boom.

PART NO.: 20927

DECAL: CRANE STABILITY

FUNCTION: To inform the operator of the crane's lifting capacity throughout the entire rotation.

QUANTITY: 1

PLACEMENT: In prominent location, so it is easily seen and readily identifiable.

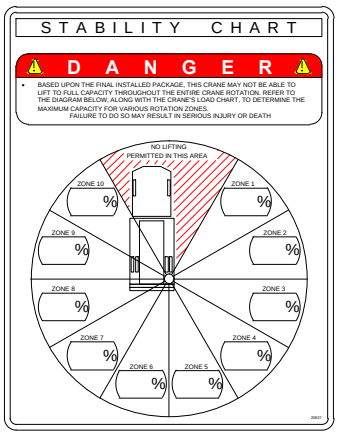

VENTURO® VENCO VENTURO INDUSTRIES LLC CINCINNATI, OHIO	TITLE DECAL DRAWING & LIST	DATE 03-22-23	SECTION C150
	HT60 SERIES	SUPERSEDES -	28443

PART NO.: 24914-L & 24914-R

DECAL: HT60-25' CRANE CAPACITY

FUNCTION: To show the operator the operating capacities of the crane

QUANTITY: 1 each

PLACEMENT: Right side of boom, Left side of boom

LEFT SIDE OF BOOM

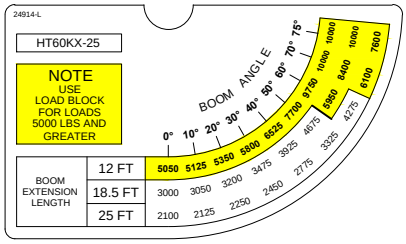

24914-L

RIGHT SIDE OF BOOM

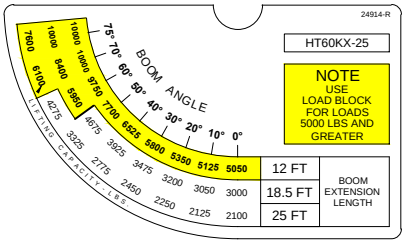

24914-R

PART NO.: 24915-L & 24915-R

DECAL: HT60-30' CRANE CAPACITY

FUNCTION: To show the operator the operating capacities of the crane

QUANTITY: 1 each

PLACEMENT: Right side of boom, Left side of boom

LEFT SIDE OF BOOM

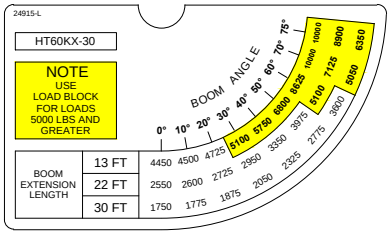

24915-L

RIGHT SIDE OF BOOM

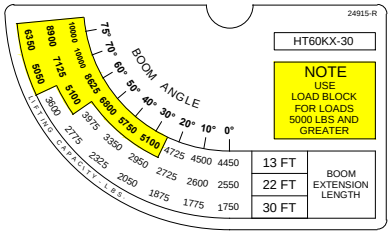

24915-R

S P A C E I N T E N T I O N A L L Y L E F T B L A N K

S P A C E I N T E N T I O N A L L Y L E F T B L A N K

	TITLE	DATE	SECTION
VENTURO® VENCO VENTURO INDUSTRIES LLC CINCINNATI, OHIO	BOOM CAPACITY DECALS	11-10-22	C150
	HT60KX VLC SERIES	SUPERSEDES -	28425

▲

PART NO.: 23742

DECAL: VLC, 2.94" x 6.00"

FUNCTION: To show that the crane is equipped with Venturo Logic Controls

QUANTITY: 2 each

PLACEMENT: Each side of Housing

VENTURO LOGIC CONTROLS

▲

S P A C E I N T E N T I O N A L L Y L E F T B L A N K

S P A C E I N T E N T I O N A L L Y L E F T B L A N K

S P A C E I N T E N T I O N A L L Y L E F T B L A N K

SECTION 200

INSTALLATION

VENCO VENTURO INDUSTRIES LLC
CINCINNATI, OHIO

7607200A

BODY REINFORCEMENT

The truck body must be reinforced and outriggers provided to withstand the combined loads resulting from lifting and the weight of the crane and boom.

The maximum combined overturning moment for the HT60KX is approximately 70,000 ft-lbs (includes moments induced by both lifted load and weight of the boom itself).

The maximum vertical load for the HT60KX-25' is 12,250 lbs and HT60KX-30' is 12,750 lbs.

CRANE MOUNTING

The crane base plate or mounting pedestal must be bolted to the body reinforcing plate with four [4] grade eight (8) bolts of 1-1/8" diameter with coarse threads, torqued to 965 foot pounds.
A 6" - 10" diameter hose clearance hole must be cut in this plate to allow the hoses to swing and coil freely.

ROTATION POSITIONING

The HT cranes are shipped with the boom rotated as shown on drawing ▲23532. It can be in any position that pleases the user since the boom can always reach the storage and travel position by rotating one way or the other.

HYDRAULIC CONNECTIONS

▲ The crane is furnished with pressure, return, and case drain hoses that come down through the center of the housing. The pressure and return hoses connect to two hydraulic swivels to prevent damage while rotating the crane right and left.

⚠ C A U T I O N ⚠

- THE CASE DRAIN HOSE MUST BE A DEDICATED RETURN HOSE UNRESTRICTED TO TANK / RESERVOIR. DO NOT 'T' INTO ANOTHER EXISTING RETURN HOSE OR DAMAGE TO THE HYD. WINCH FROM BACK-PRESSURE WILL OCCUR. BACK-PRESSURE IN EXCESS OF 200 PSI WILL DAMAGE THE HYD. WINCH.

Arrange the pressure & return hoses in the compartment below the crane so that they are connected in a relaxed position while the crane is at the midpoint of the 400 degree rotation range -- regardless of the final position of the boom during storage/travel. See installation pages 22913 for more information on hose connections.

ELECTRICAL CONNECTIONS

A 9 ft electrical power lead - intended for 12V DC only - comes down through the center of the crane base plate along with the hoses. This power lead should be slacked in the compartment so that it remains relaxed throughout the 400 degree rotation of the crane.

A 20 amp circuit breaker is mounted on the crane and protects the crane's internal wiring and solenoid coils. The 20 amp circuit breaker does not protect the 9 ft power lead. For added protection, the 9 ft lead can be connected to a 20 amp protected circuit that, if possible, is powered only when the vehicle engine is running.

HYDRAULIC FLUID

Average Climate	Type of Oil
Cold to Moderate	ISO Grade AW 46
Warm to Hot	ISO Grade AW 68

The fluid should have the highest anti-wear characteristics and treated to inhibit rust and oxidation.

HYDRAULIC HOSES & LINES

The minimum sizes for lines and hoses are as follows:

HYDRAULIC LINE	HOSE INSIDE DIAMETER
PRESSURE	5/8"
RETURN	3/4"
SUCTION	1-1/4"

RESERVOIR

The PTO reservoir should have a capacity of 40 gallons fitted with 100 mesh suction screen, 10 micron return line filter, and filler/breather cap.

PTO PUMP

The PTO pump should be sized to allow an engine idle speed range that will deliver approximately 12 GPM. The crane's system relief pressure is set at 3000 psi.

PTO START-UP

Before connecting the PTO system to the crane pressure and return hoses, connect the PTO pressure and return lines together at the bulkhead. Assuming 12 GPM with a 40 gallon reservoir, operate the PTO system for 20-25 minutes to flush out the lines and filter all fluid approximately seven times.

ENGINE START/STOP & THROTTLE CONTROL

If your crane was purchased with optional engine start/stop and throttle control, refer to drawing 22615 in the replacement parts section for further information.

400° ROTATION STOP LOCATION

Crane is shipped in "CURBSIDE" mounting configuration.

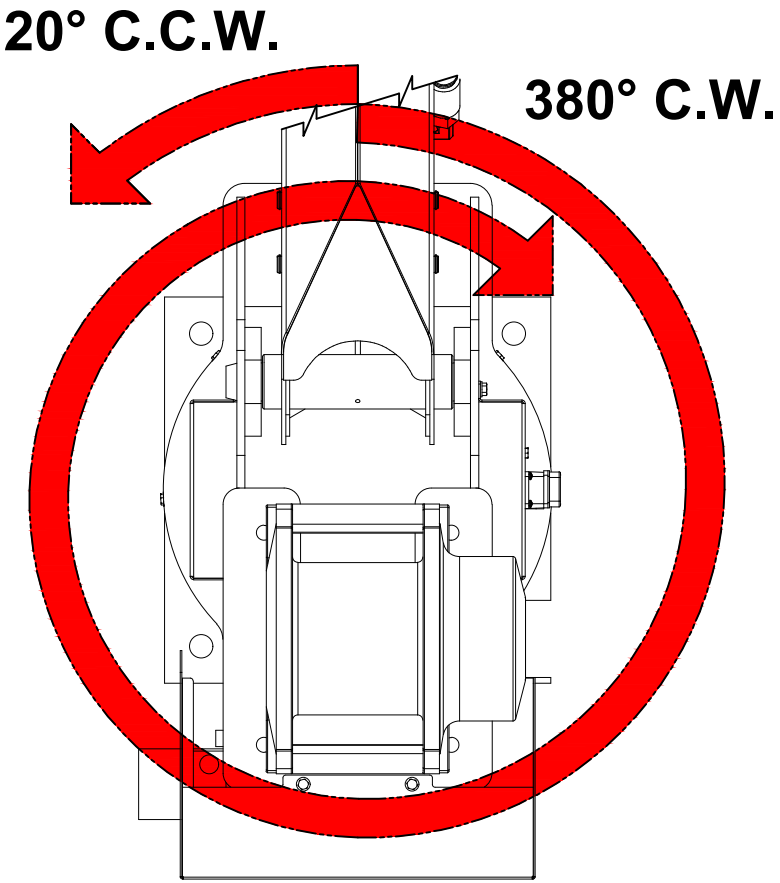

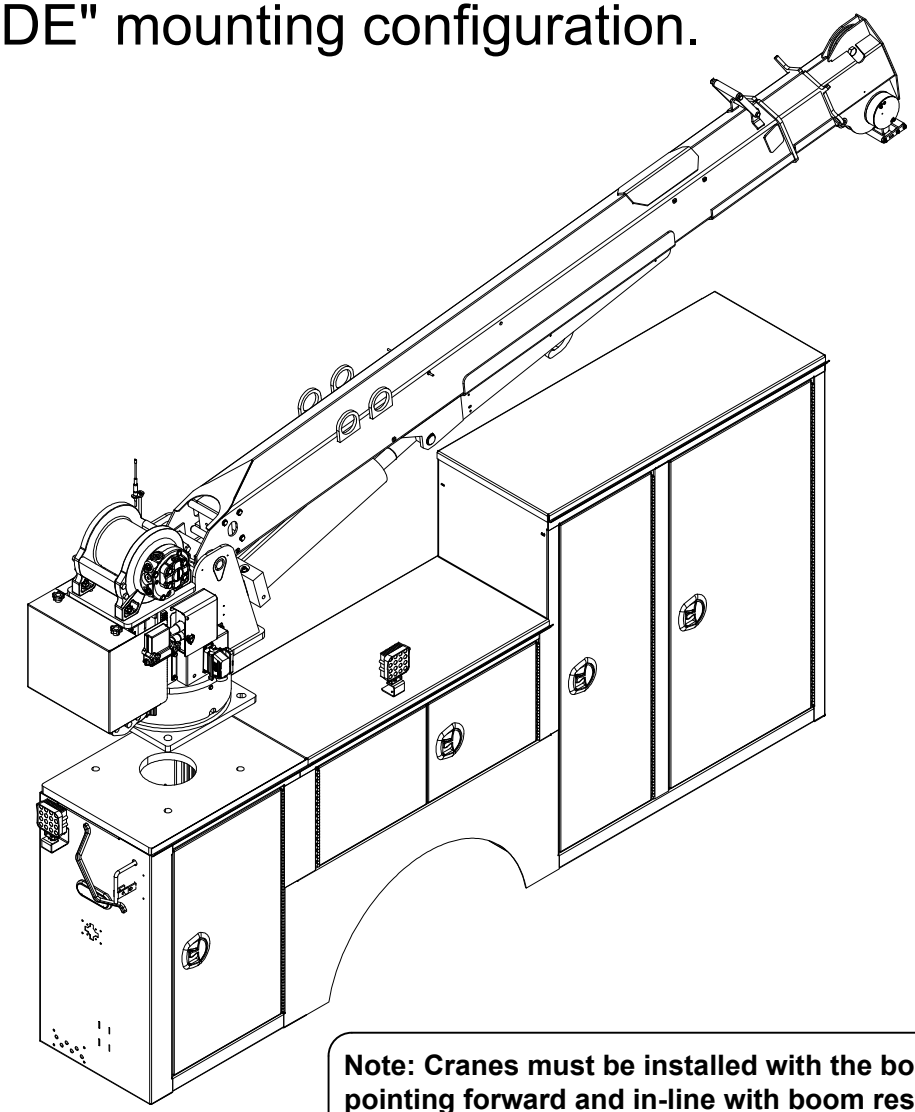

Note: Cranes must be installed with the boom pointing forward and in-line with boom rest.

Contact Venturo Tech Support for assistance. 1-800-226-2238.

STABILITY TEST - HT60-25'-VLC SERIES

Overview

Venturo follows the guidelines of ANSI B30.5 in defining stability. Generally speaking, a truck is considered stable as long as it is not on the verge of tipping - i.e. with the truck level, at least one tire on each corner of the truck must remain in contact with the ground.

It is important to note that nearly every installation is unique and will, therefore, typically require stability testing.

The procedure outlined below follows ANSI's (B30.5 - 5-1.1.1) specified "maximum load rating" of 85% of truck stability.

Testing Procedure

1. Locate the truck on firm, level ground and set parking brake.

2. Fully deploy stabilizers, making sure they are firmly in contact with supportive ground; use stabilizer pads as required. The tires of the truck should remain in full contact with the ground.

3. Inspect wire rope and other key components of crane (consult owners manual for more information).

4. Conduct an operational check of all crane functions.

5. Use a ***Test Weight*** weighing a ***minimum*** of ***2471 lbs***, (includes load block weight of 51 lbs.) to a ***maximum of 2600 lbs***.

6. Place the VLC system into ***Stability Mode*** (reference VLC Manual) ▲

7. Position the boom level and fully retracted

8. Referring to the Stability Chart (drawing 20907) rotate the crane to a position between 1 and 2 o'clock (truck cab is facing 12 o'clock) to begin testing.

9. Use the winch to lift the Test Weight; DO NOT allow the weight to be more than 6" off the ground at any time during testing (for safety).

10. Using the test weight, extend the boom slowly until one of three conditions occurs:
    - 10.1. Full extension is reached - Mark the ZONE in question **100%**
    - 10.2. The VLC system stops the boom extension - Mark the ZONE in question **100%**
    - 10.3. The truck becomes unstable i.e. a tire lifts off the ground
      - 10.3.1. Retract the boom until at least one tire on each corner of the truck is making contact with the ground
      - 10.3.2. Use the formula below to determine the allowable ***% of Rated Capacity*** for the ZONE in question:

11. Note: The ***Max Stable Reach in inches*** is measured from the ***center of rotation*** of the crane housing to the ***lifting load hook.***

$$\% \text{ Rated Capacity} = \frac{\text{"Max Stable Reach" in inches}}{302} \times 100$$

12. Record the **% of Rated Capacity** in the appropriate blank (region) on the Crane Stability page (ref. 20907) and decal.

13. Repeat Steps 7 through 12 for each ZONE on the stability page.

STABILITY TEST - HT60-30'-VLC SERIES

Overview

Venturo follows the guidelines of ANSI B30.5 in defining stability. Generally speaking, a truck is considered stable as long as it is not on the verge of tipping - i.e. with the truck level, at least one tire on each corner of the truck must remain in contact with the ground.

It is important to note that nearly every installation is unique and will, therefore, typically require stability testing.

The procedure outlined below follows ANSI's (B30.5 - 5-1.1.1) specified "maximum load rating" of 85% of truck stability.

Testing Procedure

1. Locate the truck on firm, level ground and set parking brake.

2. Fully deploy stabilizers, making sure they are firmly in contact with supportive ground; use stabilizer pads as required. The tires of the truck should remain in full contact with the ground.

3. Inspect wire rope and other key components of crane (consult owners manual for more information).

4. Conduct an operational check of all crane functions.

5. Use a ***Test Weight*** weighing a ***minimum*** of ***2000 lbs***, (includes load block weight of 51 lbs.) to a ***maximum of 2100 lbs***.

6. Place the VLC system into ***Stability Mode*** (reference VLC Manual) ▲

7. Position the boom level and fully retracted

8. Referring to the Stability Chart (drawing 20907) rotate the crane to a position between 1 and 2 o'clock (truck cab is facing 12 o'clock) to begin testing.

9. Use the winch to lift the Test Weight; DO NOT allow the weight to be more than 6" off the ground at any time during testing (for safety).

10. Using the test weight, extend the boom slowly until one of three conditions occurs:
    - 10.1. Full extension is reached - Mark the ZONE in question **100%**
    - 10.2. The VLC system stops the boom extension - Mark the ZONE in question **100%**
    - 10.3. The truck becomes unstable i.e. a tire lifts off the ground
      - 10.3.1. Retract the boom until at least one tire on each corner of the truck is making contact with the ground
      - 10.3.2. Use the formula below to determine the allowable ***% of Rated Capacity*** for the ZONE in question:

11. Note: The ***Max Stable Reach in inches*** is measured from the ***center of rotation*** of the crane housing to the ***lifting load hook.***

$$\% \text{ Rated Capacity} = \frac{\text{"Max Stable Reach" in inches}}{358} \times 100$$

12. Record the **% of Rated Capacity** in the appropriate blank (region) on the Crane Stability page (ref. 20907) and decal.

13. Repeat Steps 7 through 12 for each ZONE on the stability page.

CRANE STABILITY

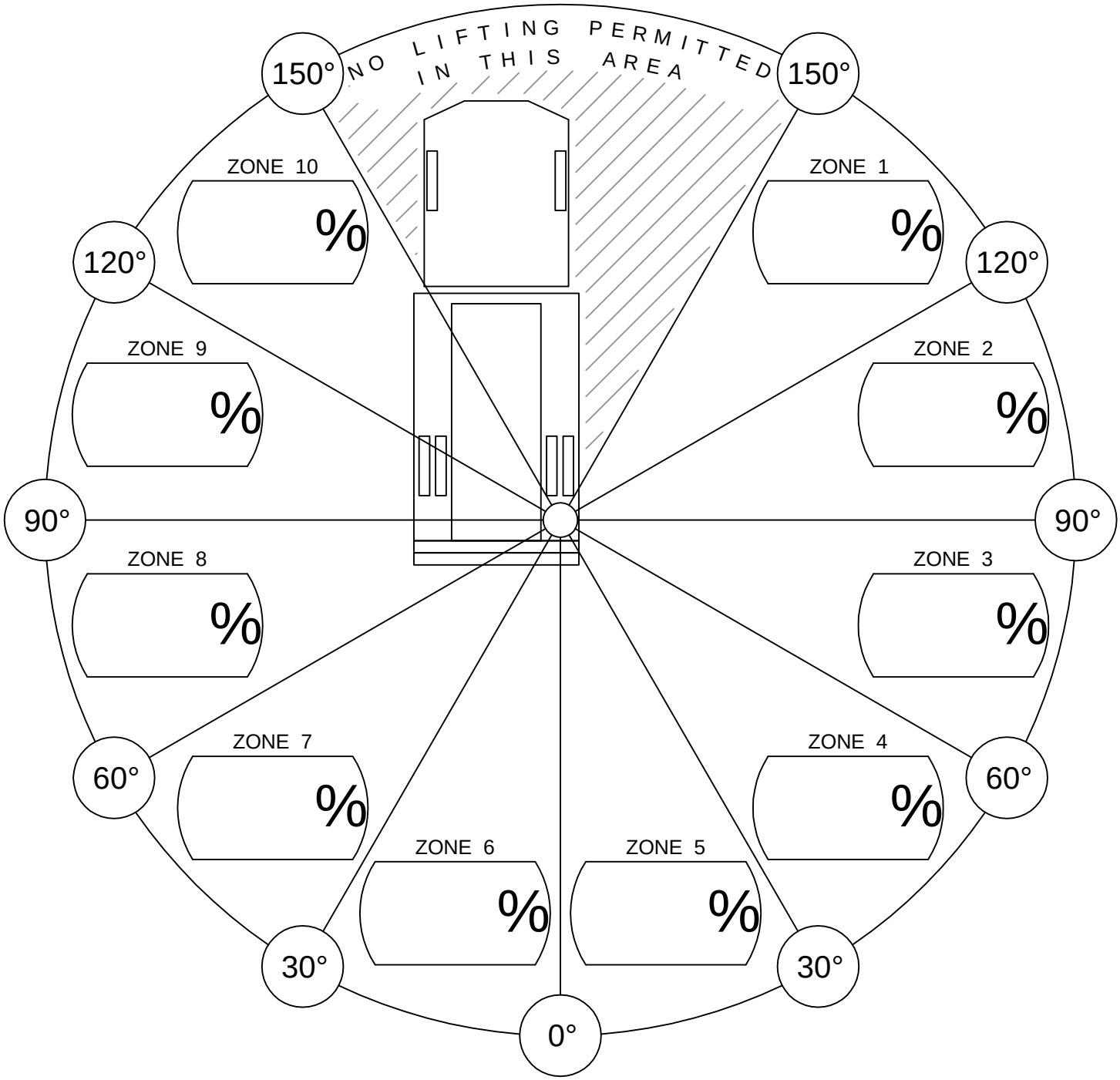

% of Rated Capacity for each of the 10 regions are provided above.

CONDITIONS:

- STABILIZERS FULLY EXTENDED & DOWN, ON FIRM LEVEL GROUND.

VENTURO® VENCO VENTURO INDUSTRIES LLC CINCINNATI, OHIO	TITLE STABILITY CHART	DATE 05-11-17F	SECTION C200
	VENTURO CRANES	SUPERSEDES 02-21-14E	20907

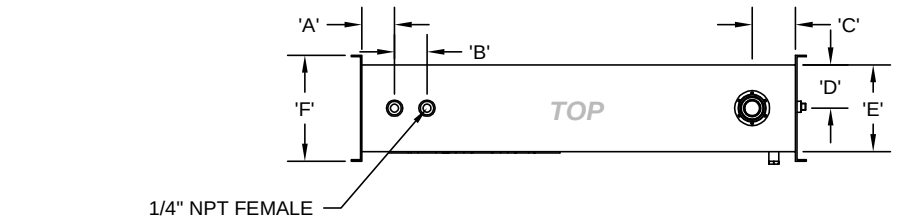

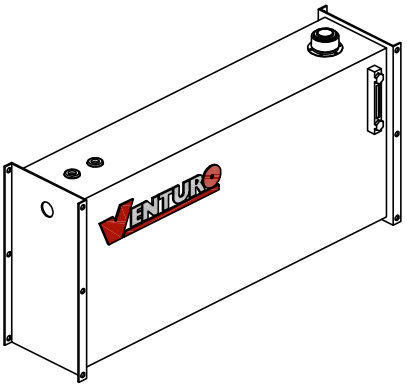

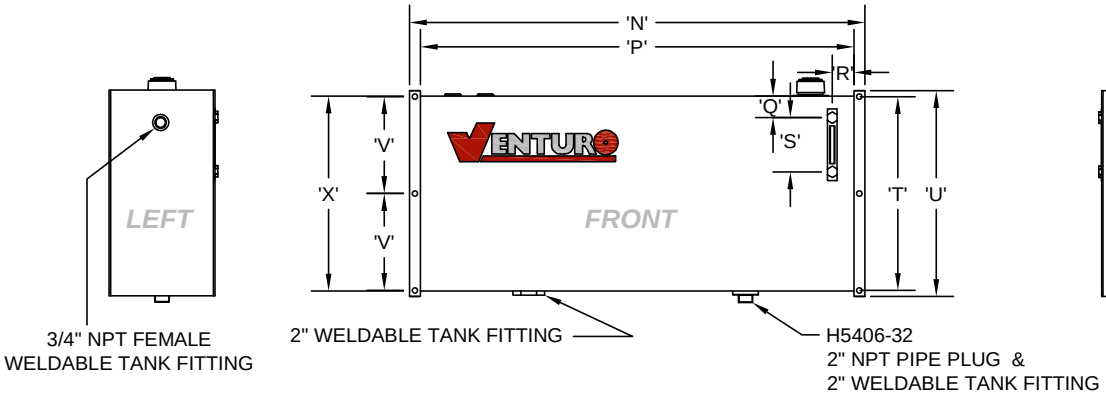

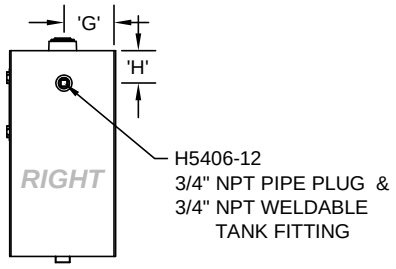

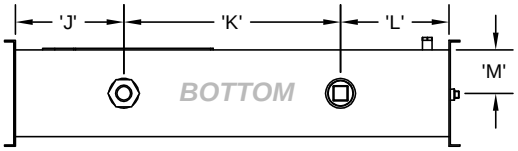

ILLUSTRATIONS FOR REFERENCE ONLY!
- COMPONENT LOCATIONS MAY DIFFER -

HYD. TANK DIMENSION (HTD) CHART		
DIMENSION / PART NO.	22786 (25 GAL.)	22999 (40 GAL.)
'A'	3"	3"
'B'	3"	3"
'C'	4"	4"
'D'	4"	5.5"
'E'	8"	11"
'J'	5"	6"
'K'	30"	30"
'L'	5"	6"
'M'	4"	5.5"
'P'	40"	42"
'Q'	2"	2"
'R'	2"	2"
'S'	5"	5"
'X'	18"	20"

MEASUREMENTS EXCLUDE MOUNTING APARATUSES

MOUNTING DIMENSION (*TMD*) CHART		
DIMENSION / PART NO.	22786 (25 GAL.)	22999 (40 GAL.)
'F'	9.75"	12"
'G'	4.875"	6"
'H'	3"	3"
'N'	42"	44"
'T'	17.875"	19.875"
'U'	19"	21"
'V'	8.938"	9.938"

MEASUREMENTS INCLUDE MOUNTING APARATUSES

VENTURO®
VENCO VENTURO INDUSTRIES LLC
CINCINNATI, OHIO

TITLE	DATE	SECTION
RESERVOIR DIMENSIONS	02-21-14E	C200
HYD. TANKS (25/40 GAL.)	SUPERSEDES 06-04-13D	22825

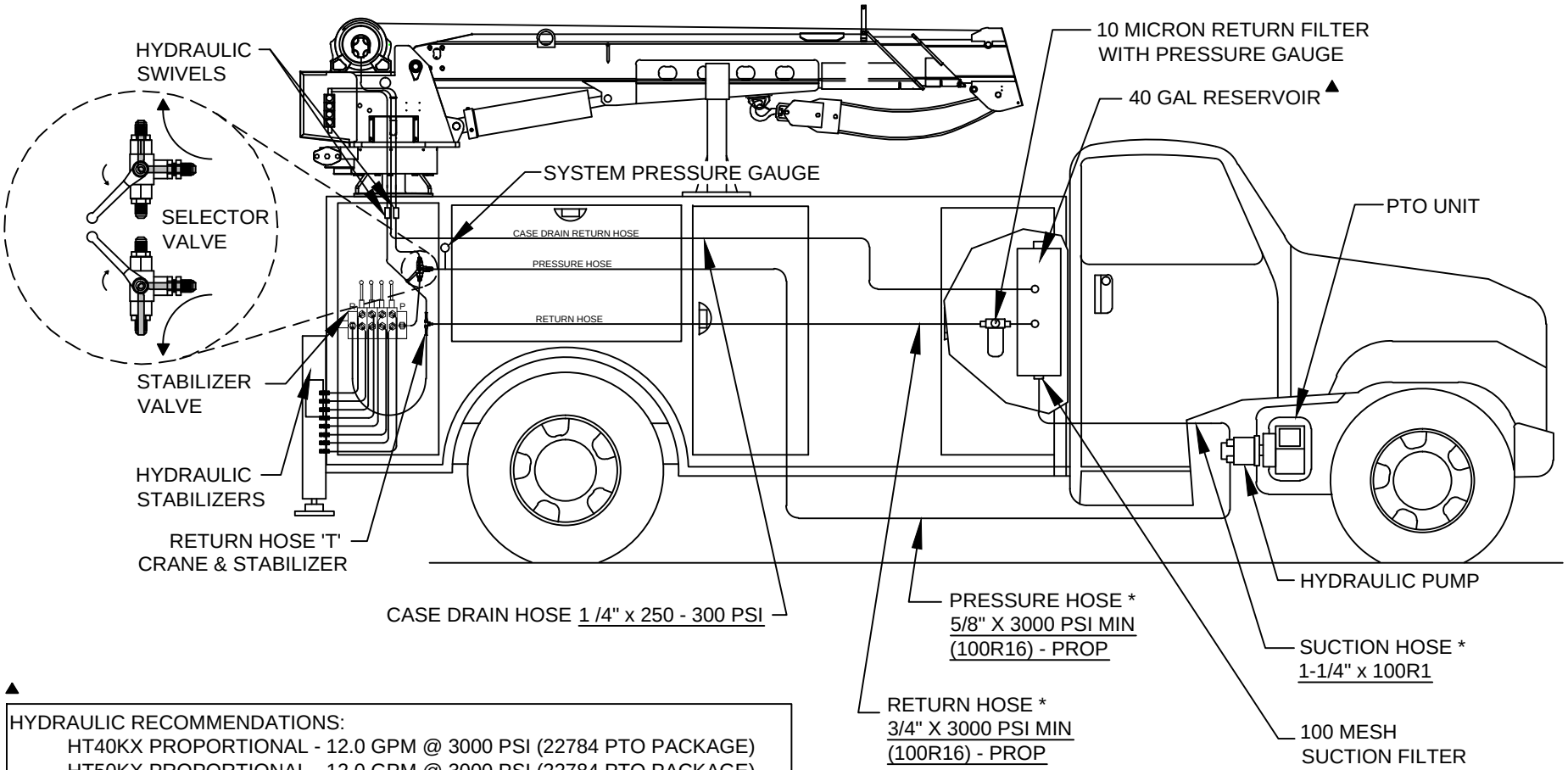

▲

HYDRAULIC RECOMMENDATIONS:

- HT40KX PROPORTIONAL - 12.0 GPM @ 3000 PSI (22784 PTO PACKAGE)
- HT50KX PROPORTIONAL - 12.0 GPM @ 3000 PSI (22784 PTO PACKAGE)
- HT45KX - 12.0 GPM @ 3000 PSI (22998 PTO PACKAGE)
- HT55KX - 12.0 GPM @ 3000 PSI (22998 PTO PACKAGE)
- HT60KX - 12.0 GPM @ 3000 PSI (22998 PTO PACKAGE)
- HT66KX - 12.0 GPM @ 3000 PSI (22998 PTO PACKAGE)

⚠ CAUTION

- SELECTOR VALVE MUST BE 'NON-CLOSED CENTER TRANSITION' TYPE.

REFER TO SECTION 200 FOR MORE INFORMATION ON INSTALLING HYDRAULIC COMPONENTS.

* HOSES AND FITTINGS BETWEEN PUMP, RESERVOIR, AND CRANE *NOT INCLUDED*.

⚠ CAUTION

- THE CASE DRAIN LINE FROM THE WINCH MUST HAVE AN UNRESTRICTED PATH TO TANK/ RESERVOIR.

HYDRAULIC CIRCUIT CONNECTION GUIDE - SINGLE PUMP (NO COMPRESSOR)
(REFER TO SECTION 200 FOR MORE INFORMATION, INCLUDING HOSE SPECIFICATIONS)

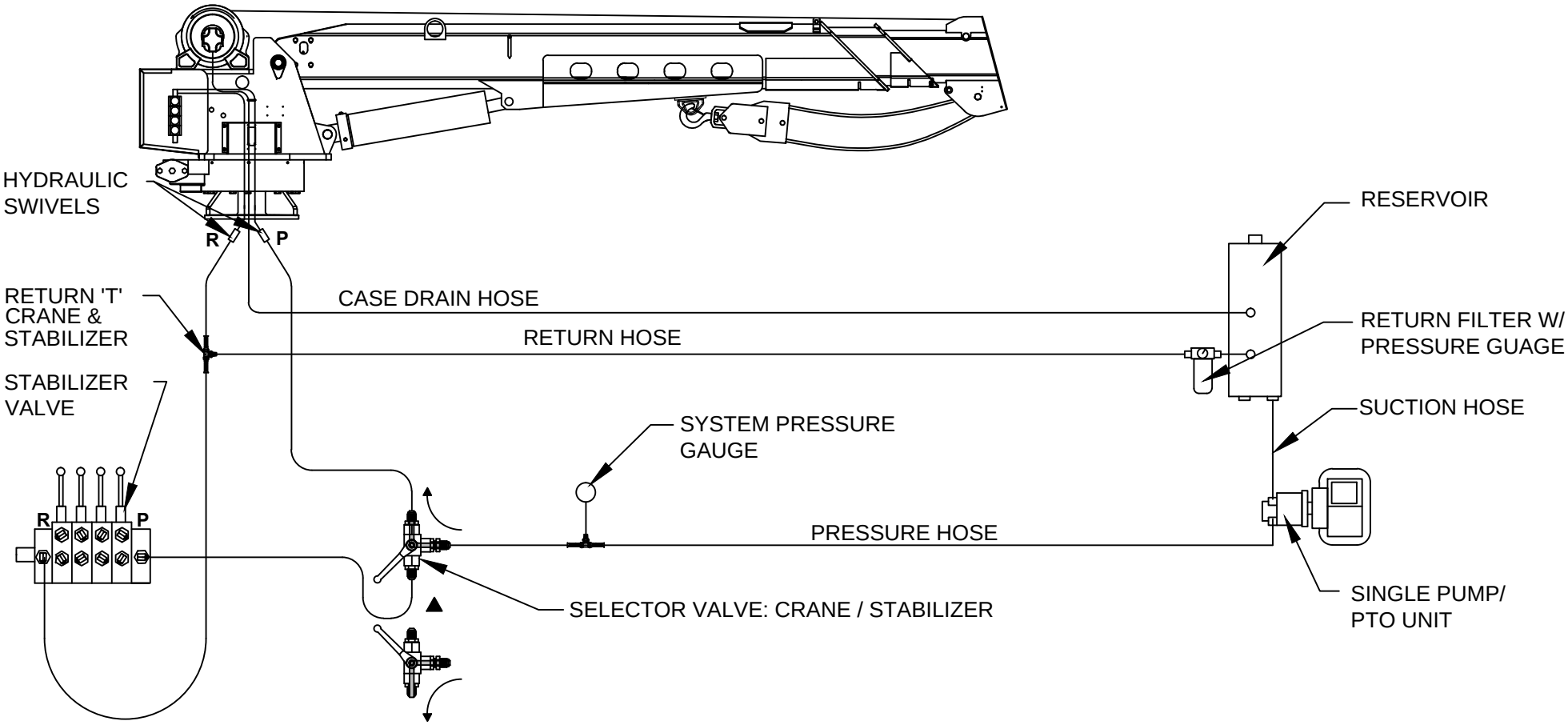

⚠ CAUTION

- SELECTOR VALVE MUST BE 'NON-CLOSED CENTER TRANSITION' TYPE.

⚠ CAUTION

- THE CASE DRAIN LINE FROM THE WINCH MUST HAVE AN UNRESTRICTED PATH TO TANK/ RESERVOIR.

HYDRAULIC CIRCUIT CONNECTION GUIDE - SINGLE PUMP W/ COMPRESSOR

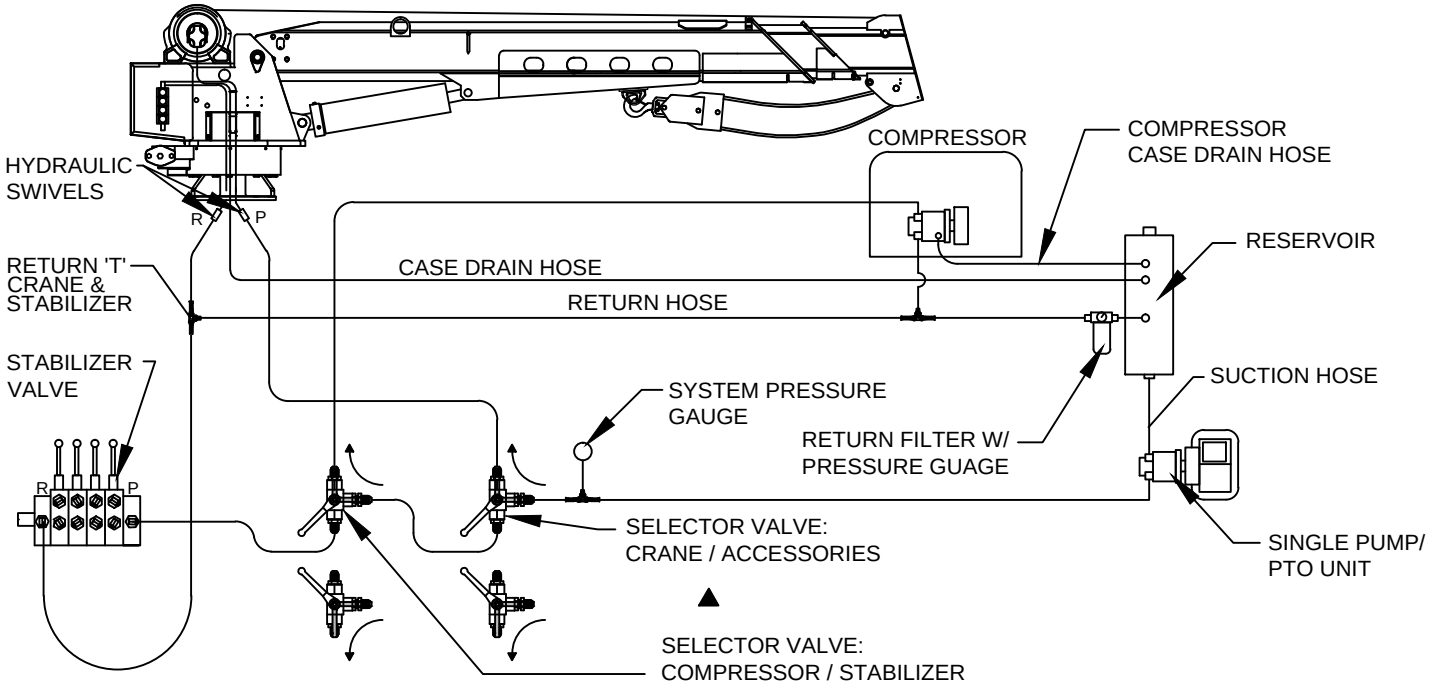

HYDRAULIC CIRCUIT CONNECTION GUIDE - TWO-STAGE PUMP W/ COMPRESSOR

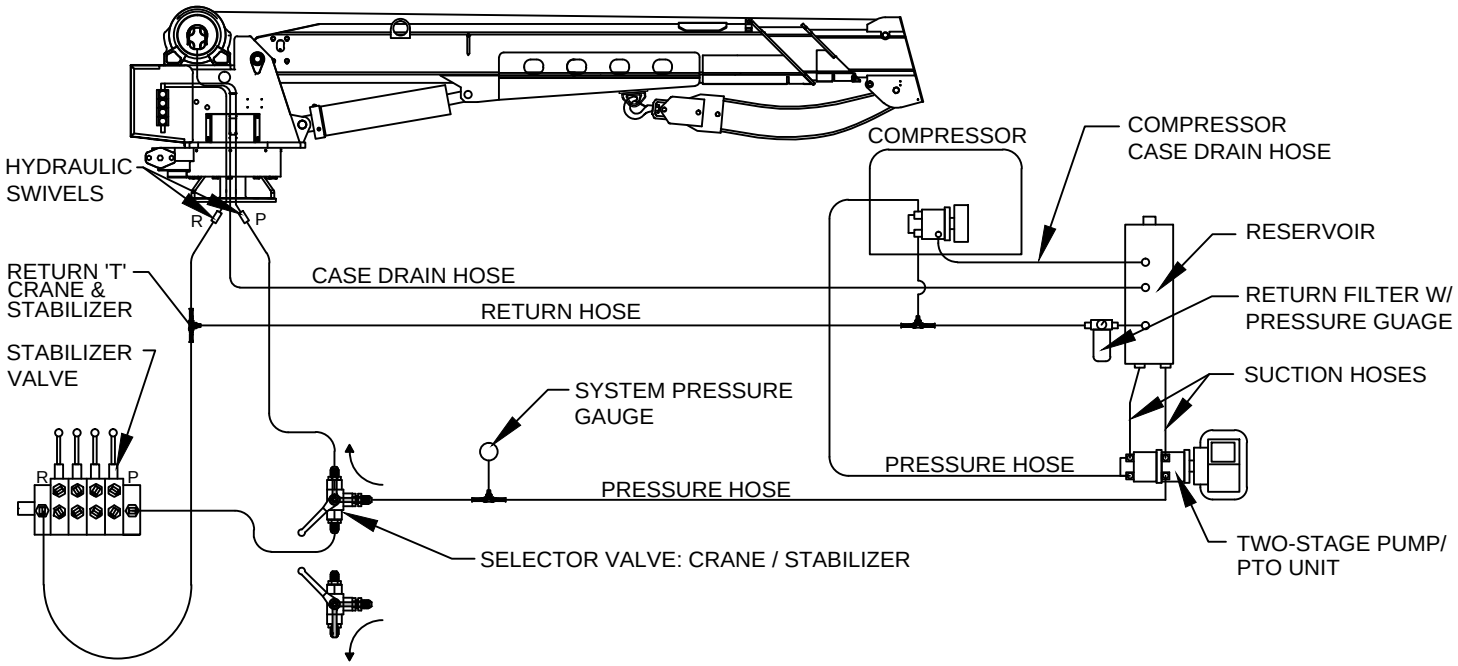

CAUTION

- SELECTOR VALVE MUST BE 'NON-CLOSED CENTER TRANSITION' TYPE.

REFER TO SECTION 200 FOR MORE INFORMATION, INCLUDING HOSE SPECIFICATIONS

CAUTION

- THE CASE DRAIN LINE FROM THE WINCH MUST HAVE AN UNRESTRICTED PATH TO TANK/ RESERVOIR.

RECOMMENDED SUPPLY & RETURN HOSE CONNECTIONS
CRANE & STABILIZERS

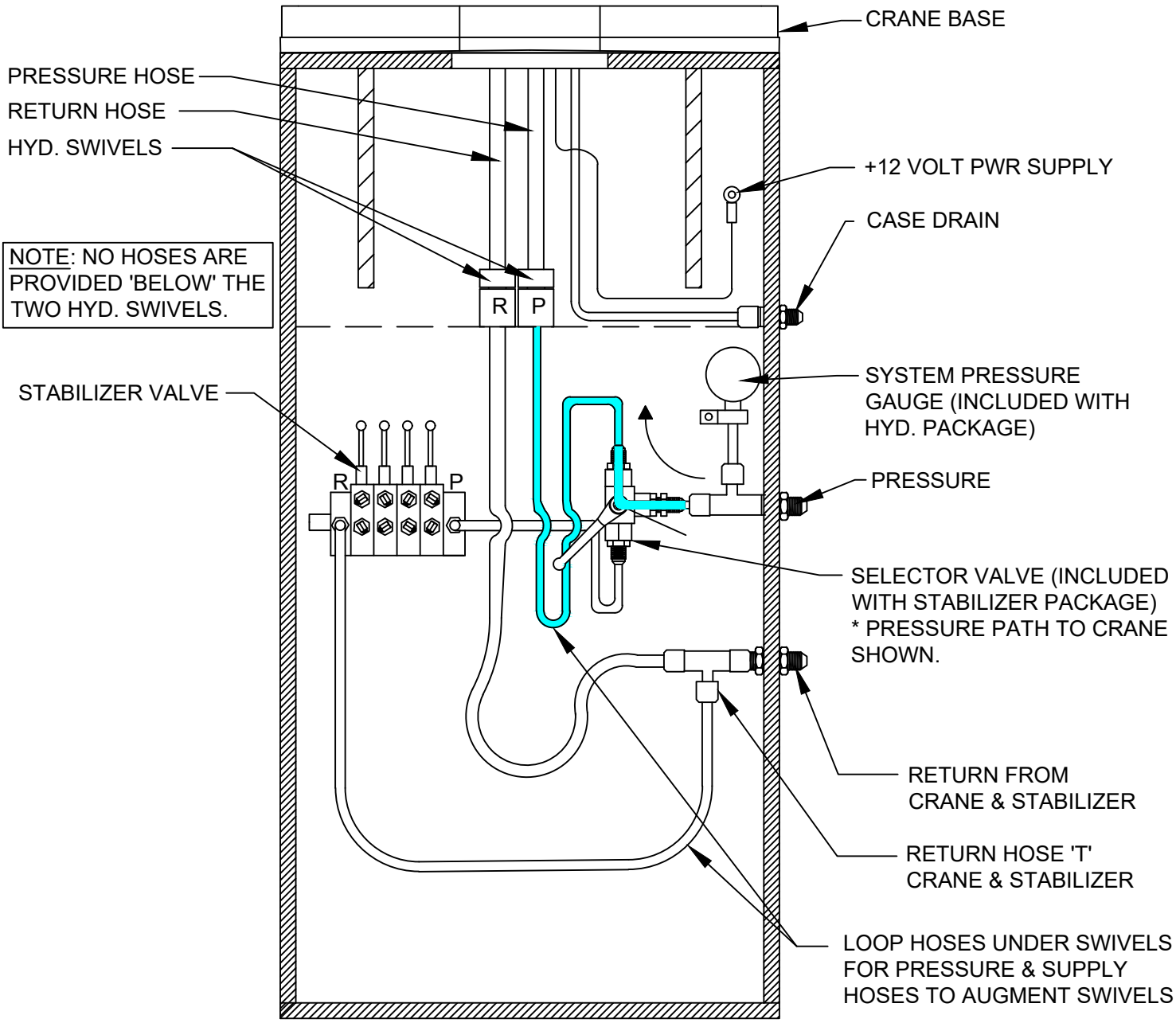

⚠ CAUTION

- SELECTOR VALVE MUST BE 'NON-CLOSED CENTER TRANSITION' TYPE VALVE.

⚠ CAUTION

- CASE DRAIN MUST RETURN DIRECTLY TO RESERVOIR WITHOUT RESTRICTION.

WIRE ROPE INSTALLATION

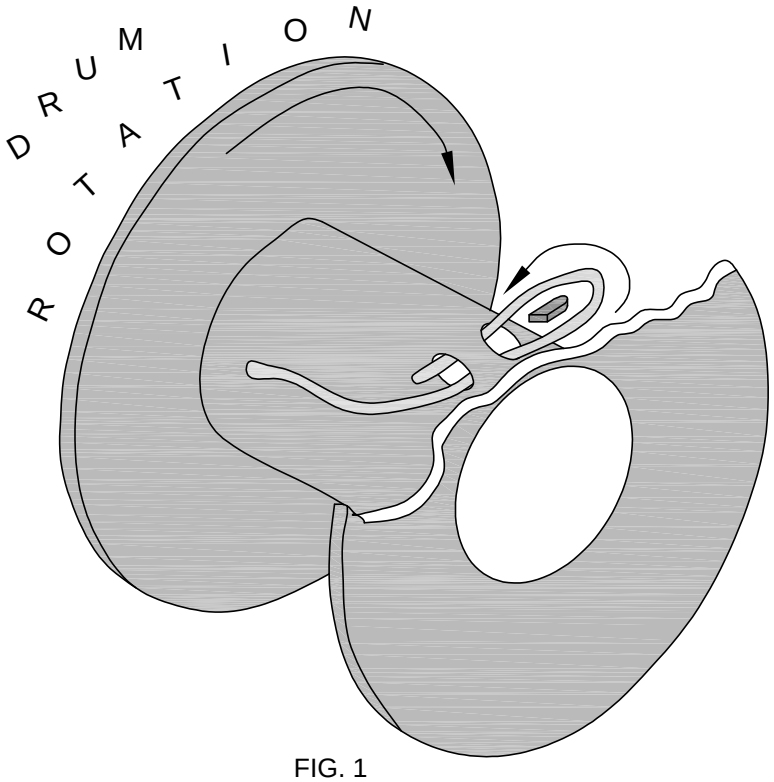

FIG. 1

STEP 1: UNWIND COIL OF WIRE ROPE BY 'ROLLING' ALONG THE FLOOR. THIS WILL PREVENT 'KINKING'.

STEP 2: INSERT WIRE ROPE END UP THROUGH ANTI-2-BLOCK (A2B) CAGE ASSEMBLY, BETWEEN CHEEK PLATES, OVER THE TOP SHEAVE, AND THROUGH WIRE ROPE GUIDE.

STEP 3: INSERT WIRE ROPE END INTO POCKET OPENING ON WINCH, WRAP AROUND WEDGE, AND BACK THROUGH POCKET OPENING AS SHOWN IN FIGURE 1.

⚠ CAUTION

- IF THE WIRE ROPE IS NOT INSTALLED FOR THE CORRECT DRUM ROTATION, THE WINCH BRAKE VALVE WILL NOT HOLD THE LOAD.

⚠ CAUTION

- THERE MUST ALWAYS BE AT LEAST [5] DEAD WRAPS OF WIRE ROPE ON THE WINCH DRUM WHILE UNDER LOAD.

NOTE: SOME WINCHES MAY BE SUPPLIED WITH A HEX NUT IN LIEU OF A WEDGE FOR INSTALLING THE WIRE ROPE.

SECTION 300

OPERATION

&

MAINTENANCE

VENCO VENTURO INDUSTRIES LLC
CINCINNATI, OHIO

MAINTENANCE OVERVIEW INFORMATION

MAINTENANCE

The crane requires only periodic lubrication. As a standard procedure, this can be done at the time the vehicle is serviced.

GENERAL

Inspect wire rope for any evidence of kinks or fraying. Ensure that lifting hook of wire rope shows no evidence of damage and is functioning normally.

Inspect headache ball ("load block") for any signs of damage or excessive wear.

Service all grease fitting locations.

Inspect hydraulic hoses and hydraulic fittings for hydraulic leaks.

Inspect electrical connections for any looseness or corrosion.

Inspect bolts and verify all are tight, paying particular attention to winch, rotation system, and mounting base bolts.

Inspect all pins and snap rings for proper fit and function.

Inspect sheaves for excessive wear or play.

Perform a basic inspection of the winch with each use, monitoring for unusual noise or hydraulic leaks.

CRANE OPERATION AND MAINTENANCE INSTRUCTIONS ▲

SAFETY

Before operating this crane, read and understand these instructions, the 920612 Crane Safety and Hazards Information Sheet, and review all safety & instruction labels on the crane.

CRANE INSPECTION

Before operating this crane, inspect for wear, damage, or oil leakage. After the wire rope has been run out, check for wear, kinks, and broken strands. Check the hook and safety latch for damage. Correct any problems before using the crane.

See Crane Safety Manual for proper inspection schedules and reports .

CAPACITY

Before operating this crane, review the capacity charts on the sides of the boom to relate the load to be lifted to the boom length and angle. The boom angle is shown by a gravity arrow.

LOAD BLOCK ▲

If the load exceeds the single-line rated load or if reduced winching speed for better control of smaller loads is required, use the load block to rig the crane for two part line operation.

CONTROLS ▲

The control pendant should be stored in a compartment or the cab when the crane is not in use.

Before activating the control pendant, inspect the cord(s) and pendant head/switches for damage. With the pendant OFF and the PTO disengaged, actuate all switches in both directions to verify that they all have the same feel/sound and return to the center position.

PTO SYSTEM ▲

Check the hydraulic fluid level in the PTO system reservoir. Engage PTO and set the engine speed to provide the desired hydraulic flow rate per the PTO system instructions.

CRANE OPERATION

Use "Winch Down" to release tension on the wire rope to unhook it from the storage tie down position.

Use "Boom Up" to elevate the boom from the boom rest position.

Avoid repeated rapid reversals of the control switches. This can cause the load to swing.

Check all control functions to see that they are working as described in the following section.

CONTROL FUNCTIONS

- WINCH "UP" and "DOWN" - Raises and lowers the load with the winch.
- BOOM "UP" and "DOWN" - Raises and lowers the boom elevation angle.
- BOOM "OUT" and "IN" - Extends and retracts the boom.
- ROTATION "L" and "R" - Controls the left and right direction of the crane rotation.
- TRIGGER - Varies the flow rate delivered to the crane valve. The farther the trigger is pulled, the faster the selected crane function operates.

CRANE OPERATION (with VLC TRANSMITTER)▲

- Turn master crane power ON.
- Disengage the E-STOP.
- Actuate the HORN toggle switch.
- Select the crane function toggle switch to be actuated.
- Pull the proportional trigger to control the speed of the selected crane function.
- NOTE: For safety reasons, the crane function toggle switch must be selected *before* pulling the proportional trigger or the crane will not operate.

VLC OVERLOAD SENSING SYSTEM

This crane is equipped with the Venturo Logic Control (VLC) overload sensing system. If the capacity of the crane is exceeded, the "Winch Up", "Boom Down", and "Boom Out" functions will be shut down. The "Winch Down", "Boom Up", and "Boom In" functions will continue to operate and can be used to relieve the overload condition. The "Rotation" function also will continue to operate.

TWO-BLOCK SENSING SYSTEM

This crane is equipped with an anti two-block device that is mounted at the tip of the boom. If the load block / overhaul weight contacts the device the "Winch Up", "Boom Down", and "Boom Out" functions are disabled. The "Winch Down", "Boom Up", and "Boom In" functions will continue to operate and can be used to relieve the two-block condition.

TRUCK SETUP & STABILIZERS

1. The truck should be parked on firm level ground.
2. The center of the crane should be positioned close enough to the job so that it can be operated at a reach that puts the load within the rated capacity of the crane.
3. Set the vehicle parking brake and put the vehicle transmission in "park" if it is an automatic.
4. Fully deploy stabilizers to help stabilize vehicle against rocking or overturning.
5. Use stabilizers to level vehicle only. Tires must maintain contact with ground.

PREPARATION FOR TRAVEL

1. Return the stabilizers to the stowed position. Install and secure all pins.
2. Stow the crane boom in the boom support.
3. Hook the winch line to a tie down point on the body or pedestal and apply tension.
4. Disengage the PTO pump and idle speed control.
5. Power down the control pendant and store in a body compartment or the cab.
6. Turn OFF power to crane.

MAINTENANCE - MODEL-SPECIFIC INFORMATION

The winch planetary gearbox lube should be maintained at the level plug.

To ensure optimal winch performance, the following lube schedule and lube specifications should be followed:

Initial Change - after 6 months or 100 hours of operation (whichever comes first).
Periodic Change - every 24 months or 300 hours of operation (whichever comes first).

HLP 46 or HLP 68 hydraulic oil

Service grease fittings and rotation gear with molybdenum-disulfide graphite-filled lithium-based extreme pressure grease.

Grease fitting locations:
Boom pivot at rear of boom
Slew drive (2 zerk fittings)
Swing bearing race (1 zerk fitting)
Elevation cylinder base and rod pivots

EXPLANATION OF HYDRAULIC VALVE SYSTEMS

OVERVIEW

Venturo's hydraulic cranes are available in two [2] general configurations: Proportional and Non-Proportional. The **Non-Proportional** configuration utilizes a safety shut-off valve which, when ***not*** actuated, allows hydraulic fluid to bypass the valve bank and return to tank; the crane will not function when the safety shut-off valve is not actuated. When the safety shut-off valve is actuated (control pendant energizes the coil or the coil is manually overridden), hydraulic fluid cycles through the valve bank and allows the crane to function. The **Proportional** configuration utilizes a proportional valve which, in its fully closed and fully opened positions, functions similarly to the safety shut-off valve, but adds the ability to operate the crane at any speed in between these two extremes.

In both the Non-Proportional and Proportional configurations, the four [4] crane functions (winch, rotation, boom elevation, and boom extension) are controlled by four [4] separate valve sections. Each valve section has two [2] solenoid coils (and two [2] manual overrides) which control the direction that the function operates (e.g. winch up vs. winch down). For a given crane function and direction (e.g. winch up), the solenoid coil and the associated manual override lie on the same side of the valve bank (both 'push').

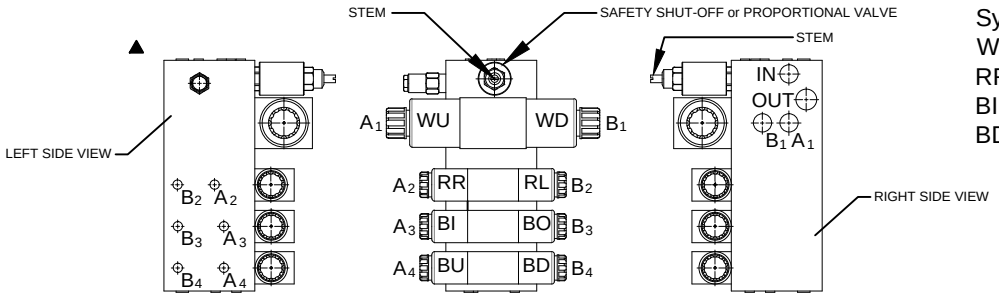

System abbreviations:

WD	- Winch Down	WU	- Winch Up
RR	- Rotation Right	RL	- Rotation Left
BI	- Boom In	BO	- Boom Out
BD	- Boom Down	BU	- Boom Up

MANUAL OVERRIDE SYSTEM

Should an electrical failure occur, your Venturo crane can be operated manually. ***The manual overrides are intended for emergency use only and should not be used for normal operation***.

To operate in manual override mode:

(1) Override the safety shut-off or proportional valve by turning the red stem on the valve as stated below:

Non-Proportional system

For override operation, press stem in and rotate counter-clockwise until it stops.
To return to normal operation, press stem in and rotate clockwise until it stops.

Proportional system

For override operation, rotate stem clockwise (the farther the stem turns, the faster the crane operates).
To return to normal operation, roate stem counter-clockwise until it stops.

(2) Determine the coil / override associated with the function you wish to operate, then insert a small diameter object (an Allen wrench works well) into the detent on the end of the valve stem and press firmly. For example, pushing the stem labeled 'A1' on the first bank (see illustration above) will actuate Winch Up.

W A R N I N G

- For normal crane operation, the safety shut-off or proportional valve ***MUST*** be in the 'normal' position (as described above). Test the crane before each use by placing the power toggle switch or trigger in the 'OFF' position and testing each crane function *using the manual overrides*. If any crane function operates, verify that the red stem on the safety shut-off or proportional valve is in the normal position, then retest.

WIRE ROPE ASSEMBLY

WIRE ROPE (24916):

- 3/8" DIA, 100'/125' LONG
- 8 X 26 LRL 2160 GALV, IWRC
- MINIMUM BREAKING STRENGTH: 17,500 LBS
- TERMINATES IN 3/8" CLOSED SWAGE SOCKET

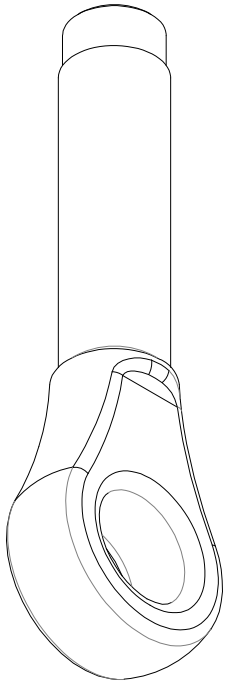

LOAD BLOCK ASSEMBLY

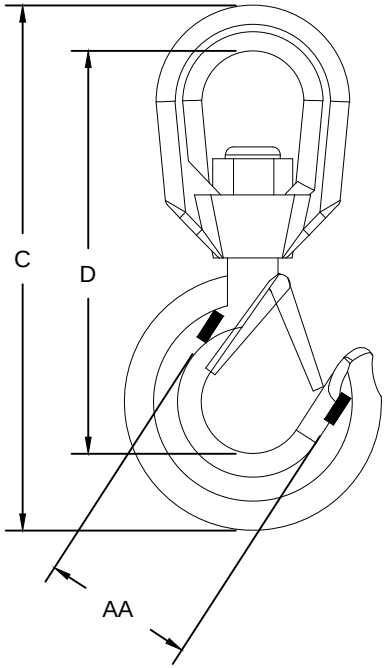

LOAD BLOCK HOOK:

RATING: 5 TONNE (11,023 LBS)

DIMENSIONS:

COLOR	BRAND	AA	C	D
GOLD	CROSBY	2.50"	9.69"	7.50"

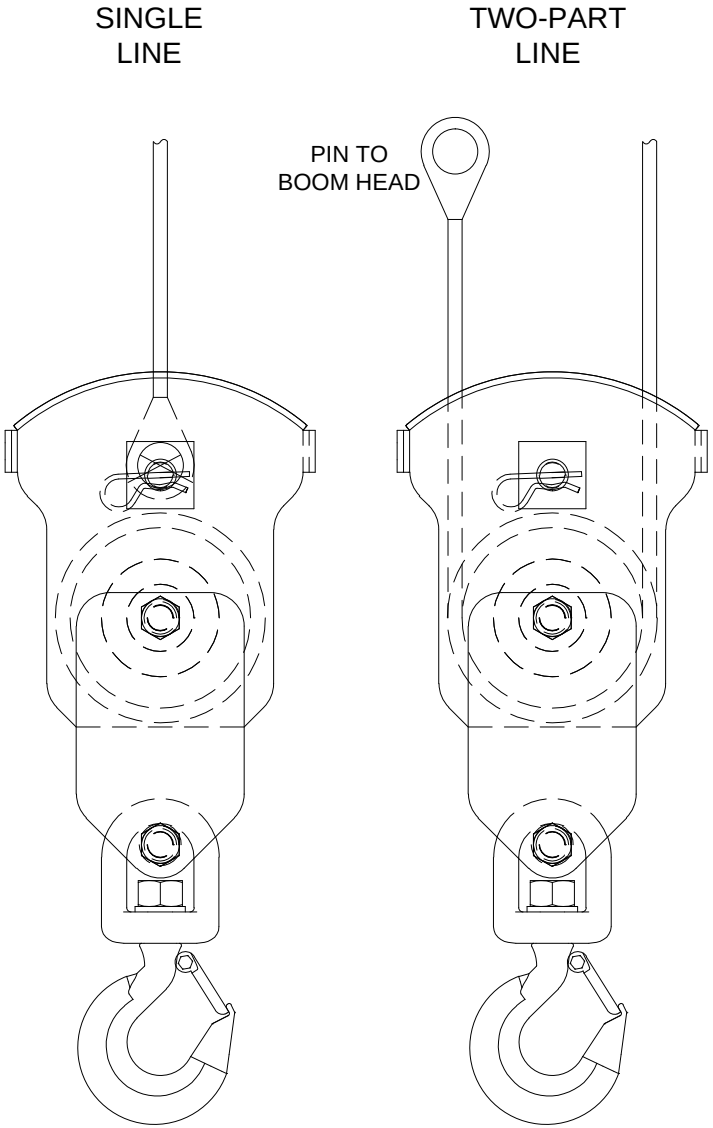

VENTURO®

VENCO VENTURO INDUSTRIES LLC
CINCINNATI, OHIO

TITLE	DATE	SECTION
WIRE ROPE, HOOK, & LOAD BLOCK INFORMATION	05-12-25A	C300
HT60KX	SUPERSEDES 03-21-23	28421

SECTION 400

REPLACEMENT PARTS

VENCO VENTURO INDUSTRIES LLC
CINCINNATI, OHIO

7607400A

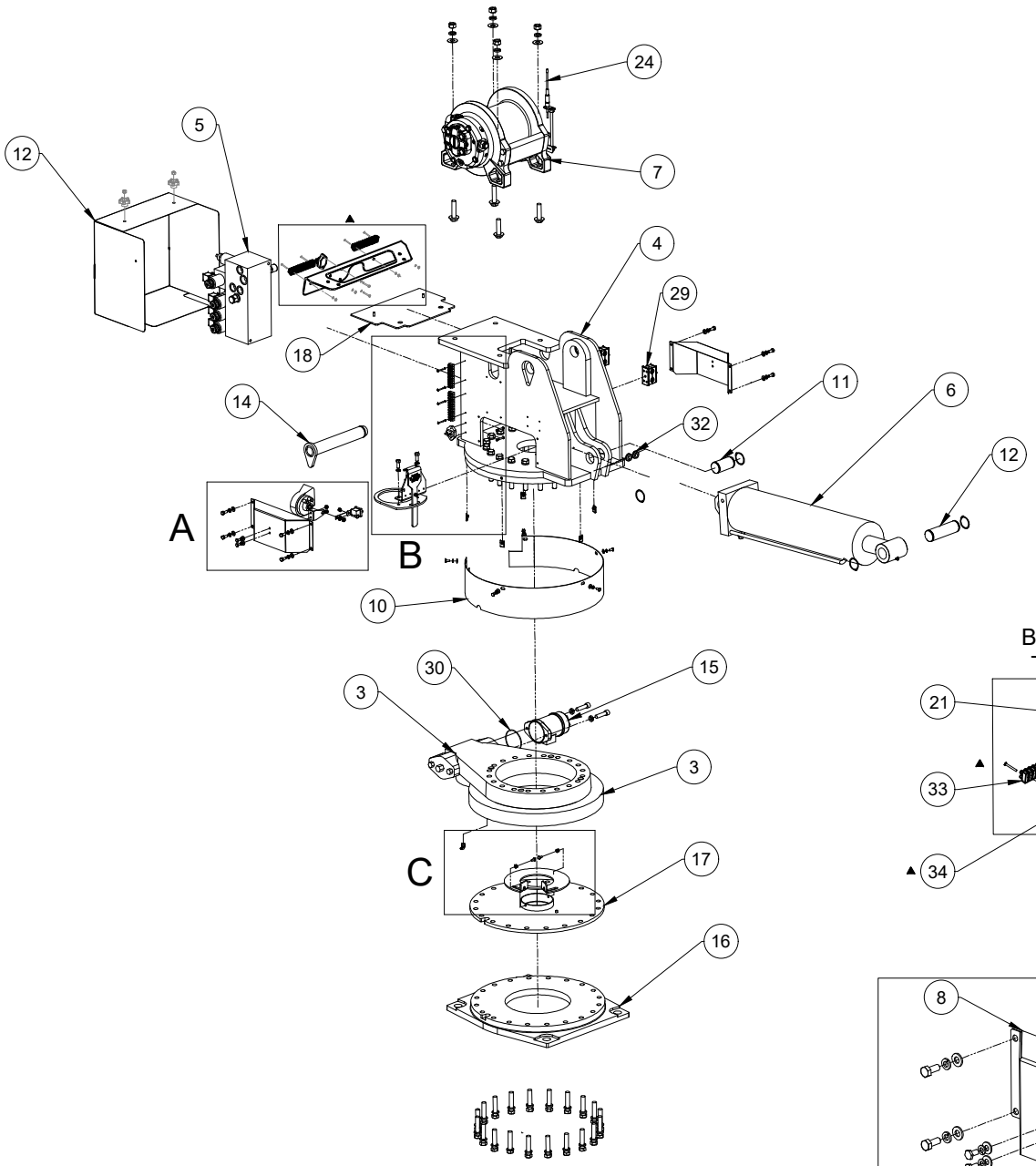

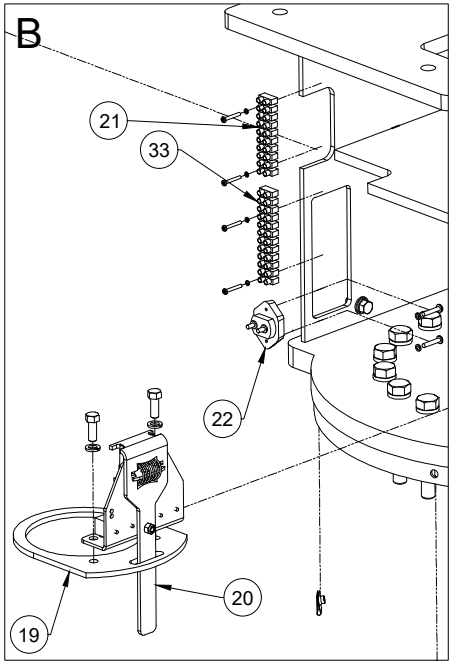

BRACKET MOUNTED
TERMINAL STRIPS

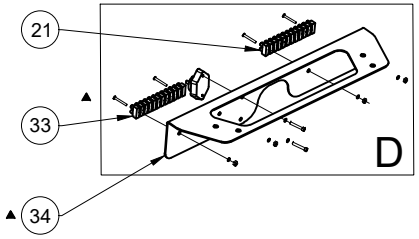

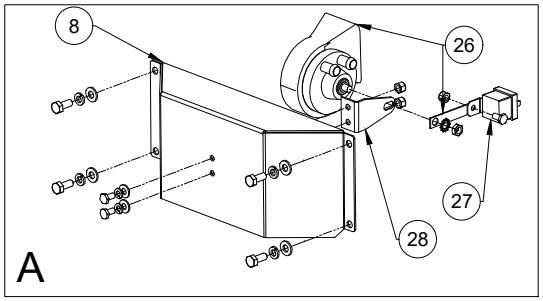

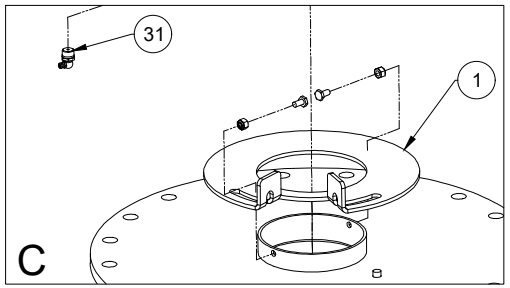

REFERENCE 28514 FOR REPLACEMENT PARTS LIST

VENCO VENTURO INDUSTRIES LLC
CINCINNATI, OHIO

TITLE	DATE	SECTION
REPLACEMENT PARTS DWG - MECHANISM	10-20-26A	C400
HT60KX VLC SERIES	SUPERSEDES 07-08-24	28513

REPLACEMENT PARTS LIST - HT60KX VLC SERIES; MECHANISM

ITEM	QTY.	PART NUMBER	DESCRIPTION
1	1	23666	STOP DISK - ELECTRIC ROTATION STOP
2	-	-	-
3	1	27275	SLEWING RING
4	1	24925	WELDED ASSEMBLY; HOUSING, MECHANISM
5	1	22736H-2	VALVE MANIFOLD; HI FLOW, 3000 PSI
6	1	21748	ELEVATION CYLINDER
7	1	27274	HYDRAULIC WINCH
8	2	27400	HOUSING SIDE COVER
9	-	-	-
10	1	27406	SLEWING RING COVER
11	1	22256	ELEVATION CYLINDER PIN - INBOARD
12	1	22257	ELEVATION CYLINDER PIN - OUTBOARD
13	1	27505	REAR COVER
14	1	22721	PIVOT PIN - MAIN BOOM PIVOT
15	1	27276	HYDRAULIC ROTATION MOTOR
16	1	28470	MACHINED BASE
17	1	28473	SLIPPER PLATE WELD
18	1	28318	REAR COVER MOUNTING PLATE WELDEMENT
19	1	23680	HOUSING WATER DAM
20	1	28474	ELECTRIC ROTATION STOP ASSEMBLY

ITEM	QTY.	PART NUMBER	DESCRIPTION
21	1	19187-10	TERMINAL STRIP; 10 SECTIONS
22	1	15683-20A	CIRCUIT BREAKER; 20A
23	-	-	-
24	-	-	-
25	-	-	-
26	1	21948	HORN
27	1	22739	HIGH CAPACITY RELAY
28	1	22000	BRACKET; HORN
29	2	27307	CLAMP ASS'Y; HOSE / TUBING
30	1	OR-152-5	O-RING; ROTATION MOTOR
31	1	!ZERK-013-27 NPT-90	FITTING; GREASE, 90°
32	2	26586	GROMMET - RUBBER
33	1	19187-12	TERMINAL STRIP; 10 SECTIONS
34	1	25255	BARRIER STRIP MNTG BRACKET ▲
35	-		
36	-		
37	-		
38	-		
39	-		
40	-		

REFERENCE 28513 FOR REPLACEMENT PARTS DRAWING

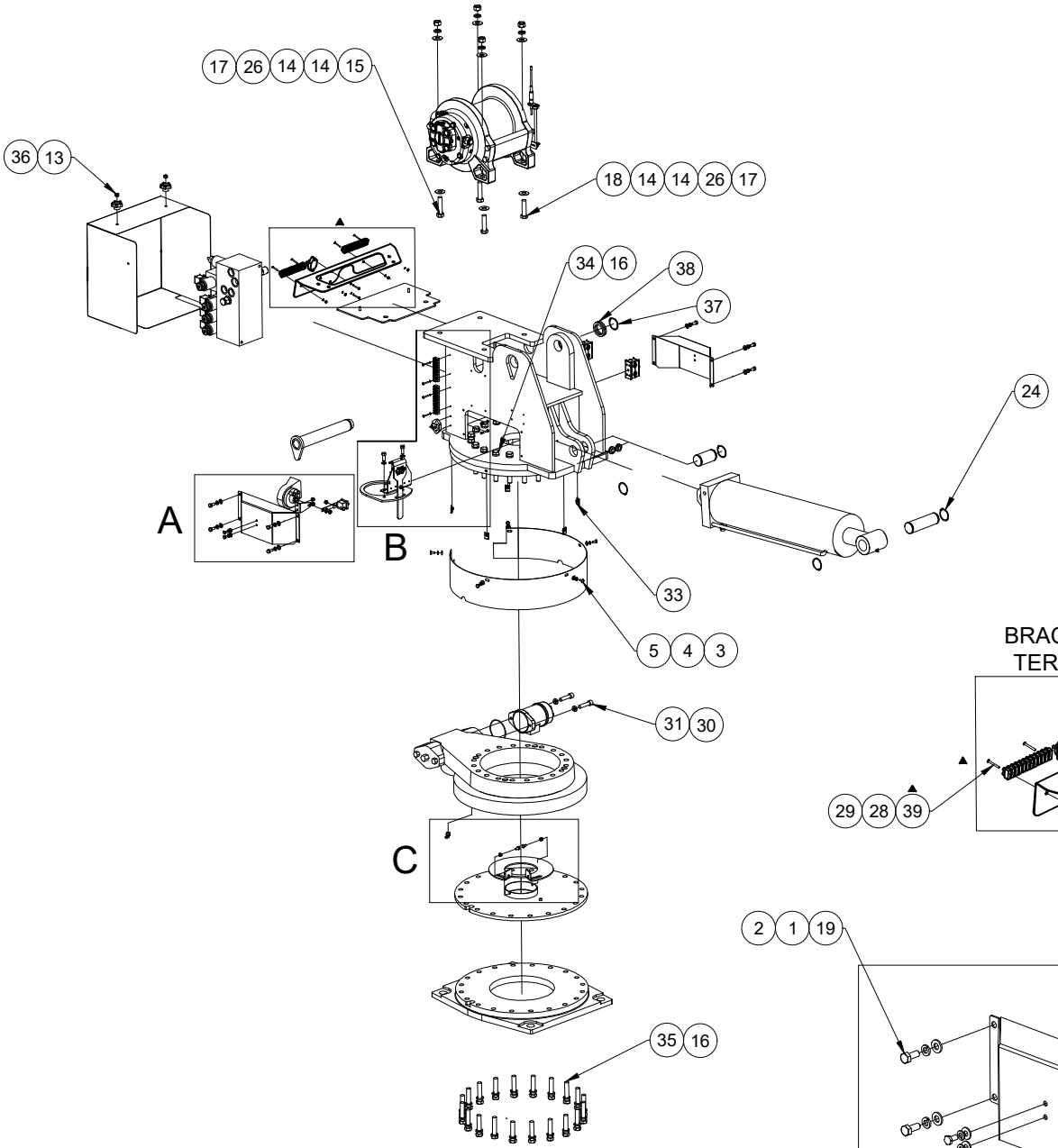

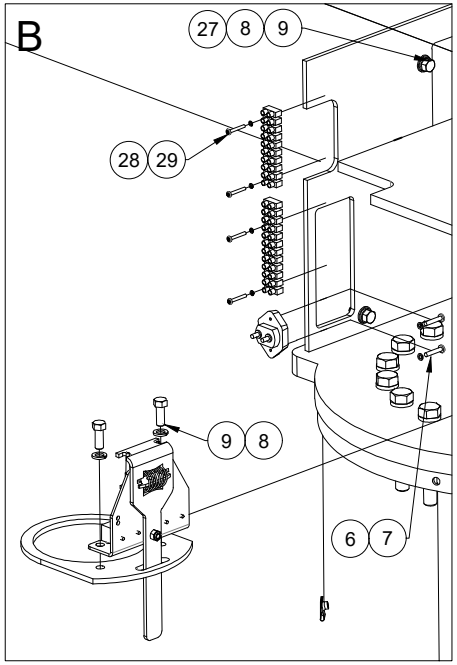

BRACKET MOUNTED
TERMINAL STRIPS

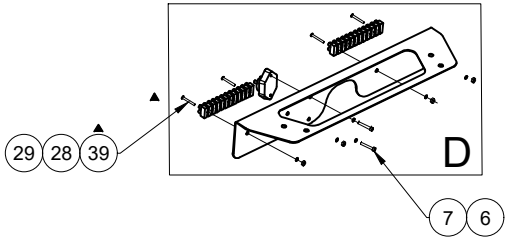

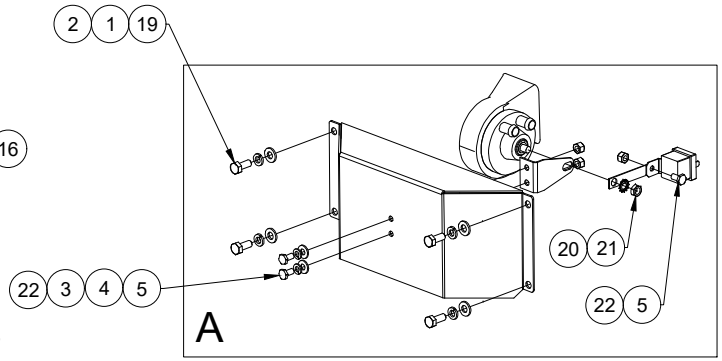

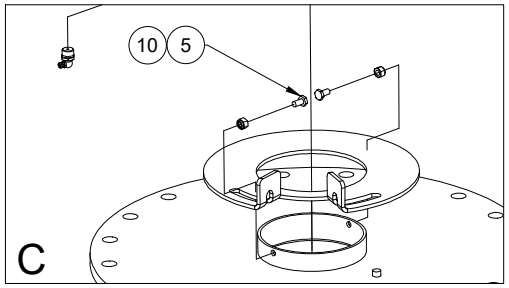

REFERENCE 28516 FOR REPLACEMENT FASTENERS LIST

VENTURO® VENCO VENTURO INDUSTRIES LLC CINCINNATI, OHIO	TITLE REPLACMENT FASTENERS DRWNG - MECH	DATE 10-20-26A	SECTION C400
	HT60KX VLC SERIES	SUPERSEDES 07-09-24	28515

REPLACEMENT FASTENERS LIST - HT60KX VLC SERIES; MECHANISM

ITEM	QTY.	PART NUMBER	DESCRIPTION
1	8	!LWSH-031S	LOCK WASHER; 5/16, S/S
2	8	!FWSH-031S	FLAT WASHER; 5/16, S/S
3	7	!FWSH-025S	FLAT WASHER; 1/4, S/S
4	7	!LWSH-025S	LOCK WASHER; 1/4, S/S
5	10	!HHCS02520050S	HHCS; 1/4-20 x 1/2, S/S
6	2	!LWSH-#10S	LOCK WASHER; #10, S/S
7	2	!SHCS#0832100S	SHCS; #10-32 X 1, S/S
8	4	!LWSH-038	LOCK WASHER; 3/8, ZINC
9	4	!HHCS03816100	HHCS; 3/8-16 X 1, ZINC
10	2	!LNUT-02520	LOCK NUT; 1/4-20, NYLON, ZINC
11	2	!HHCS02520275	HHCS, 1/4-20 X 2.75, S/S, FULL THREAD
12	-	-	-
13	2	!LNUT-02520-H	LOCK NUT; 1/4-20, HVY PAT, NYLON
14	8	!FWSH-063	FLAT WASHER; 5/8, GR. 8
15	2	!HHCS06311275	HHCS; 5/8-11 X 2-3/4, GR 8
16	40	!LWSH-063	LOCK WASHER; 5/8, GR. 5, ZINC
17	4	!HNUT-06311-8	HEX NUT; 5/8-11, GR. 8
18	2	!HHCS06311250-8	HHCS; 5/8-11 X 2-1/2 LG, GR 8
19	8	!HHCS03118075S	HHCS; 5/16-18 X 3/4, S/S
20	1	!LWSH-031-STAR	LOCK WASHER; 5/16, ZINC

ITEM	QTY.	PART NUMBER	DESCRIPTION
21	1	!HNUT-03118	HEX NUT; 5/16-18, ZINC
22	5	!LNUT-02520SS	NYLOCK HEX NUT 1/4-20
23	-	-	-
24	4	!SRNG-150	SNAP RING; 1-1/2, ZINC
25	-	-	-
26	4	!LWSH-063	LOCK WASHER; 5/8, GR. 8, ZINC
27	2	!FWSH-038	FLAT WASHER; 3/8, ZINC
28	2	!LWSH-#06S	LOCK WASHER; #06. S/S
29	2	!PHPMS#0632100S	PHILIPS-HD PMS; #6-32 X 1, S/S
30	2	!LWSH-050-HC	LOCK WASHER; 1/2, HI-COLLAR
31	2	!SHCS05013200	SOCKET HEAD CAP SCREW - 1/2-13 X 2
32	-	-	-
33	5	!UNUT-02520-LKG	U-NUT 1/4-20, LOCKING TYPE
34	20	!HHCS06311450	HHCS; 5/8-11 x 4-1/2, GR. 5, ZINC
35	20	!HHCS06311300	HHCS; 5/8-11 x 3, GR. 5, ZINC
36	2	28327	KNOB, HAND, 5-POINT
37	1	24842-175	SPIRAL RETAINING RING - 1-3/4 - STAINLESS
38	2	26609	SHIM - STAINLESS STEEL
39	4	!HNUT-#06-32S	HEX NUT; #06-32, S/S
40	-		

HHCS = HEX HEAD CAP SCREW, SHCS = SOCKET HEAD CAP SCREW, PMS = PAN MACHINE SCREW, S/S = STAINLESS STEEL

REFERENCE 28515 FOR REPLACEMENT PARTS DRAWING

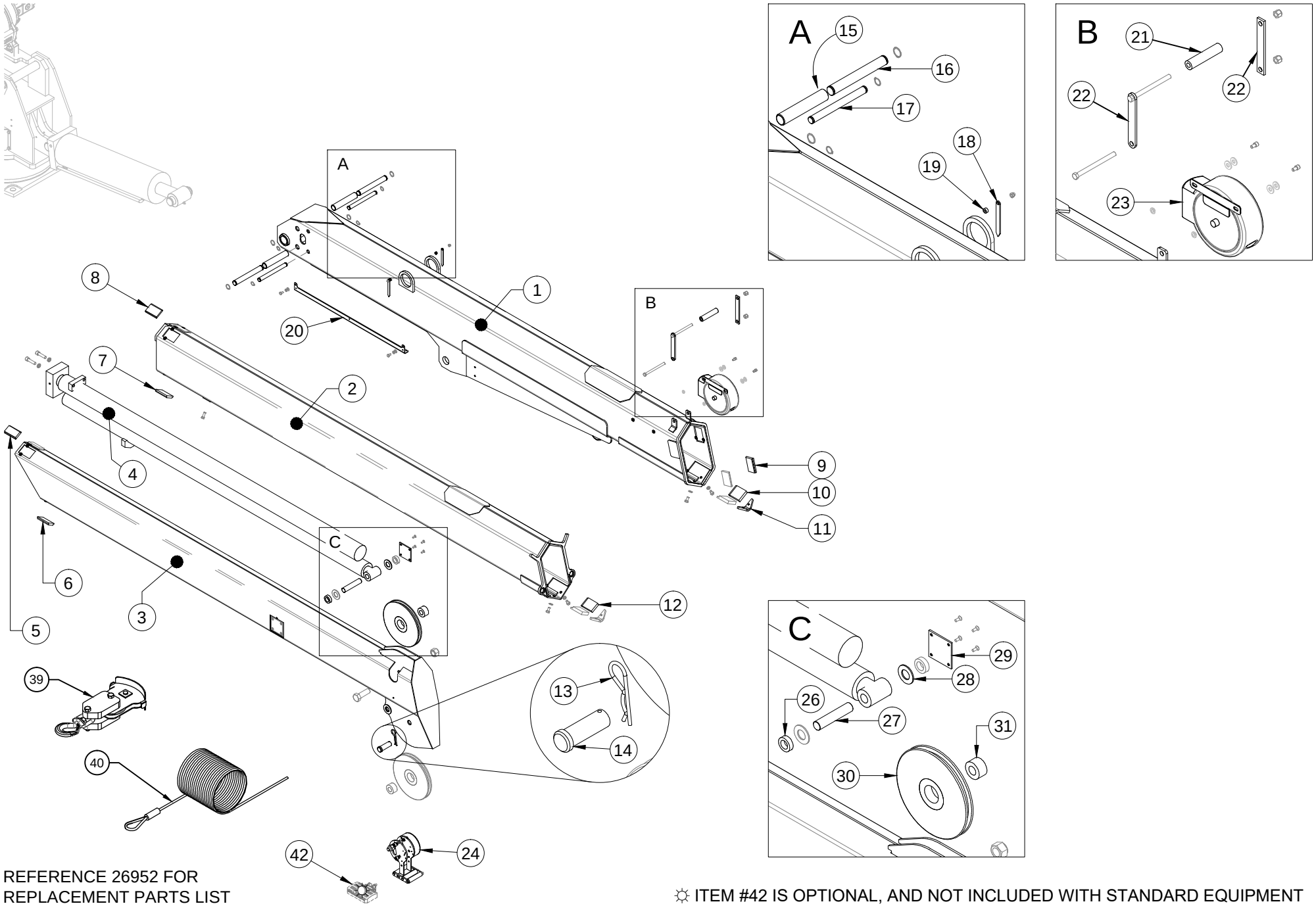

REFERENCE 26952 FOR
REPLACEMENT PARTS LIST

☼ ITEM #42 IS OPTIONAL, AND NOT INCLUDED WITH STANDARD EQUIPMENT

VENTURO®

VENCO VENTURO INDUSTRIES LLC
CINCINNATI, OHIO

TITLE	DATE	SECTION
RPLCMNT PARTS DRAWING - 26593 BOOM	08-28-24A	C400
HT40/45/50/60 - 25'	SUPERSEDES 06-11-24	26951

REPLACEMENT PARTS LIST - 26593 BOOM

ITEM	PART NO.	QTY	DESCRIPTION
1	26594	1	WELDED ASS'Y; PRIMARY BOOM
2	27175	1	WELDED ASS'Y; SECONDARY BOOM
3	23105	1	WELDED ASS'Y; TERTIARY BOOM
4	21749	1	EXTENSION CYLINDER
5	23217-1	2	BOOM PAD; UHMW, 'A', 3.19 x 1.88 x 0.50
6	23217-1	2	BOOM PAD; UHMW, 'A', 3.19 x 1.88 x 0.44
7	23217-2	2	BOOM PAD; UHMW, 'A', 3.19 x 2.13 x 0.44
8	23217-2	2	BOOM PAD; UHMW, 'A', 3.19 x 2.13 x 0.44
9	23217-13	2	BOOM PAD; UHMW, 'A', 3.19 x 2.13 x 0.38
10	23217-17	2	BOOM PAD; UHMW, 'B', 3.19 x 2.50 x 0.50
11	23183	2	V-BLOCK, SLIDER
12	23217-14	2	BOOM PAD; UHMW, 'B', 3.19 x 2.13 x 0.50
▲ 13	21-07	1	PIN; HAIRPIN COTTER
▲ 14	13401-1	1	CLEVIS PIN; 3/4 X 2" LG
15	24535	2	THRUST ROLLER; EXTENSION CYLINDER
16	22255	2	THRUST PIN; REAR, EXTENSION CYLINDER
17	22255	2	THRUST PIN; FRONT, EXTENSION CYLINDER
18	13459-2	2	ARROW
19	22490	2	SPACER; BOOM ARROW
20	26940	1	CABLE GUARD BRACKET
21	21560	1	ROLLER; UHMW, WIRE ROPE GUIDE

ITEM	PART NO.	QTY	DESCRIPTION
22	21936	2	FLAT, MOUNT; WIRE ROPE GUIDE
23	26577-1-25	1	CORD REEL ASSY (BLK STEEL CASE)
	26577-4	1	CORD REEL ASSY (BLK/YEL PLASTIC CASE)
24	27469-L-C-11	1	ANTI-TWO-BLOCK ASSEMBLY
25	-	-	-
26	21428	2	BUSHING; EXTENSION CYLINDER
27	21405	1	PIN; PIVOT, EXTENSION CYLINDER
28	!FWSH-100SAE	2	FLAT WASHER; 1" SAE
29	23116	2	PIN BLOCK REINFORCING
30	23928	2	CABLE SHEAVE
31	23929	2	SPACER; SHEAVE
32	27476-1	2	SPACER; COMPACT A2B
33	-	-	-
34	-	-	-
35	-	-	-
36	-	-	-
37	-	-	-
38	-	-	-
39	17949-1	1	LOAD BLOCK ASSEMBLY **(HT40)**
	17949-2	1	LOAD BLOCK ASSEMBLY **(HT45)**
	17949	1	LOAD BLOCK ASSEMBLY **(HT50)**
	17949-5	1	LOAD BLOCK ASSEMBLY **(HT60)**
40	17094-3/8-100	1	WIRE ROPE; 100 FT, NO HOOK **(HT40/45/50/55)**
	24916-3/8-100	1	WIRE ROPE; 100 FT, NO HOOK **(HT60)**
☼42	27483	1	ASS'Y; WORK LIGHT, LED

REFERENCE 26951 FOR REPLACEMENT PARTS DRAWING

☼ OPTIONAL; NOT INCLUDED WITH STANDARD EQUIPMENT

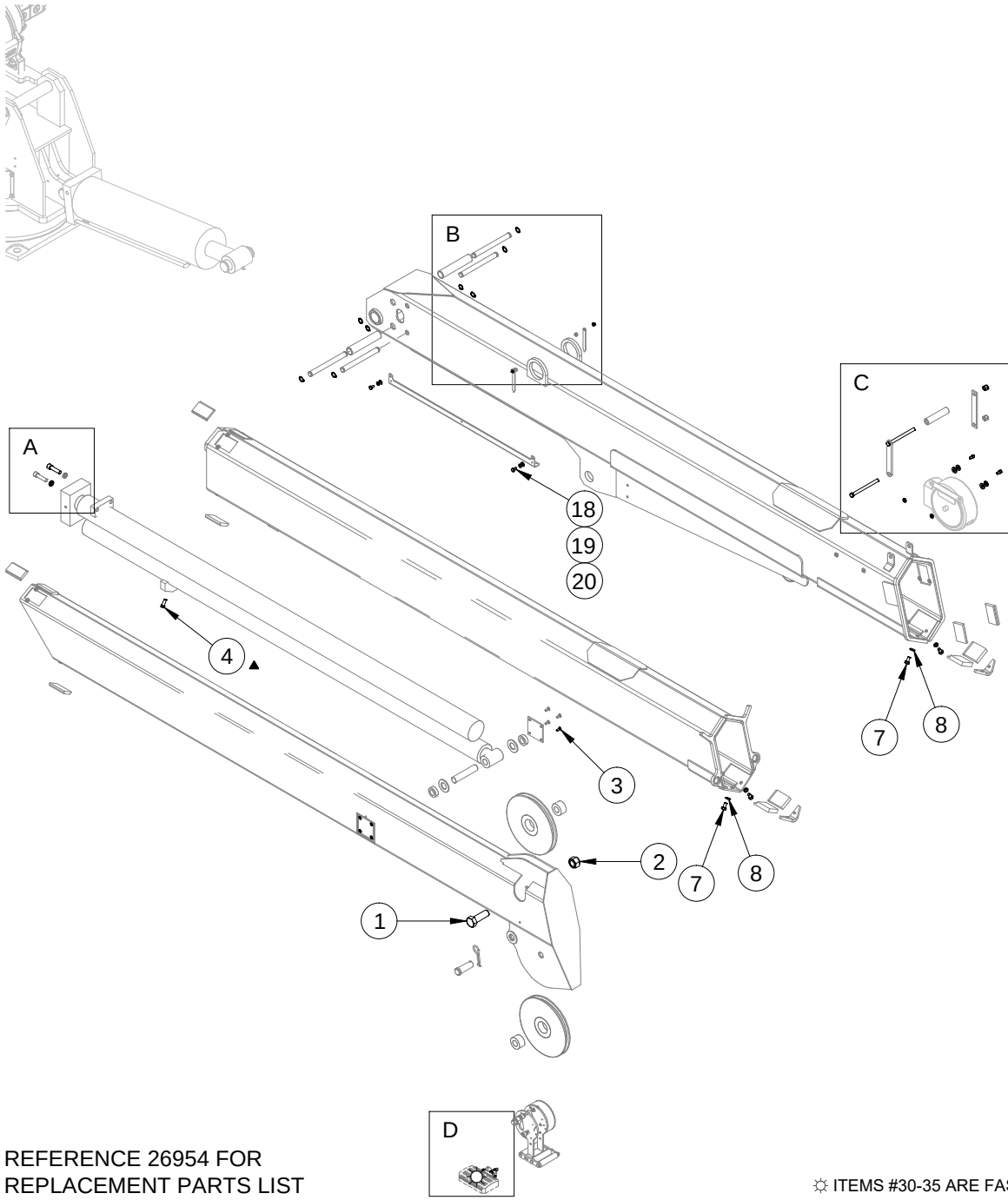

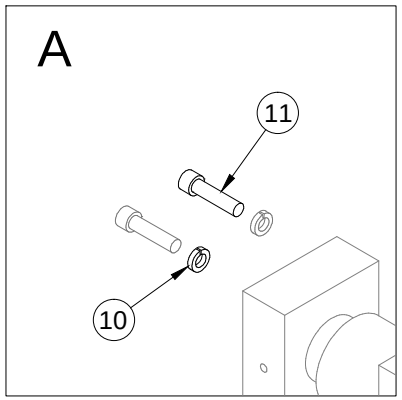

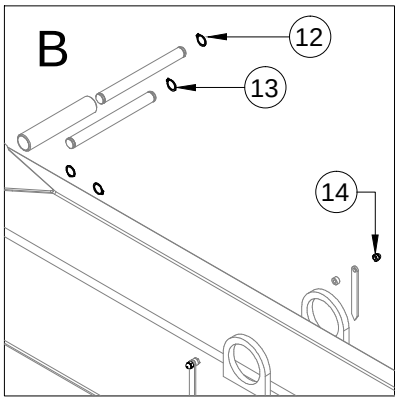

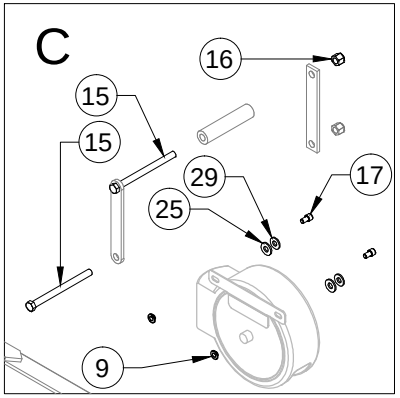

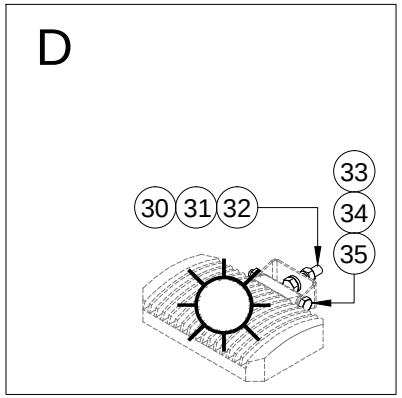

REFERENCE 26954 FOR
REPLACEMENT PARTS LIST

☼ ITEMS #30-35 ARE FASTENERS FOR OPTIONAL COMPONENTS - NOT INCLUDED WITH STANDARD EQUIPMENT

VENTURO®

VENCO VENTURO INDUSTRIES LLC
CINCINNATI, OHIO

TITLE	DATE	SECTION
RPLCMNT FASTENERS DRWNG - 26593 BOOM	11-18-24A	C400
HT40/45/50/60 - 25'	SUPERSEDES 06-11-24	26953

ITEM #	PART #	QTY	DESCRIPTION	WHERE-USED
1	17059-6	1	SHEAVE AXLE; HHCS, 3/4-10 X 2", S/S	TOP SHEAVE
2	!LNUT-07510	2	LOCK NUT, FULL, 3/4-10, GR. 5, ZINC	SHEAVES
3	!CACS02520050S	8	CACS; 1/4-20 X 1/2", S/S	PIN BLCK REINFORCING
4	!HHCS03816100N	2	HHCS; NYLON PATCH 3/8-16 X 1", GR. 5 ZINC	EXT. CYL. V-BLOCK
5	!HHCS02520100S	2	HHCS; 1/4-20 X 1", S/S	INCLINOMETER
6	!LNUT-02520NS	2	LOCK NUT; 1/4-20, NYLON, S/S	INCLINOMETER
7	!HHCS03816075S	4	HHCS; 3/8-16 X 3/4", S/S	V-BLOCKS
8	!LWSH-038	4	LOCK WASHER; 3/8", GR. 5, ZINC-PL	V-BLOCKS
▲ ⚠ 9	28198	2	INSULATING SLEEVE WASHER - 5/16"	CORD REEL
10	!LWSH-050-HC	2	LOCK WASHER; 1/2", HI-COLLAR	EXTENSION CYLINDER
11	!SHCS05013200	2	SHCS; 1/2-13 X 2"	EXTENSION CYLINDER
12	!SRNG-075	4	SNAP RING; 3/4"	EXT. CYL. REAR PINS
13	!SRNG-075	4	SNAP RING; 3/4"	EXT. CYL. FRONT PINS
14	!ANUT-02520S	2	ACORN NUT; 1/4-20, S/S	BOOM ARROWS
15	!HHCS04414550	2	HHCS; 7/16-14 X 5-1/2", GR. 5, ZINC	WIRE ROPE GUIDE
16	!LNUT-04414	2	LOCK NUT; 7/16-14, GR. 5, ZINC	WIRE ROPE GUIDE
17	!SHCS03118063S	2	SHCS; 5/16-18 X 5/8" LG, S/S	CORD REEL
18	!HHCS03118050S	2	HHCS; 5/16-11 X 1/2", S/S	CABLE GUARD BRACKET
19	!LWSH-031S	2	LOCK WASHER; 5/16", S/S	CABLE GUARD BRACKET
20	!FWSH-031S	2	FLAT WASHER; 5/16", S/S	CABLE GUARD BRACKET

ITEM #	PART #	QTY	DESCRIPTION	WHERE-USED
21	-	-	-	-
22	-	-	-	-
23	-	-	-	-
24	-	-	-	-
▲ ⚠ 25	01016	2	FIBER WASHER	CORD REEL
26	-	-	-	-
27	-	-	-	-
28	-	-	-	-
29	!FWSH-031	2	FLAT WASHER, 5/16"	CORD REEL
☼ 30	!HHCS03118125S	1	HHCS; 5/16-18 X 1-1/4", S/S	WORK LIGHT
☼ 31	!HNUT-03118S	2	HEX NUT; 5/16-18, S/S	WORK LIGHT
☼ 32	!FWSH-031S	1	FLAT WASHER; 5/16", S/S	WORK LIGHT
☼ 33	!HHCS02520250S	1	HHCS; 1/4-20 X 2-1/2", S/S	WORK LIGHT
☼ 34	!LWSH-025S	1	LOCK WASHER; 1/4", S/S	WORK LIGHT
☼ 35	!HNUT-02520S	1	HEX NUT; 1/4-20, S/S	WORK LIGHT
36	-	-	-	-
37	-	-	-	-
38	-	-	-	-
39	-	-	-	-
40	-	-	-	-

☼ ITEMS #30-35 ARE FOR OPTIONAL COMPONENTS - NOT INCLUDED WITH STANDARD EQUIPMENT

⚠ FOR 26577-1-** ONLY (NOT REQ'D FOR 26577-4)

REFERENCE 26953 FOR REPLACEMENT FASTENERS DRAWING

HHCS = HEX HEAD CAP SCREW PMS = PAN MACHINE SCREW S/S = STAINLESS STEEL

VENTURO®

VENCO VENTURO INDUSTRIES LLC
CINCINNATI, OHIO

TITLE	DATE	SECTION
PLCMNT FASTENERS LIST - 26593 BOOM	11-25-24B	C400
HT40/45/50/60 - 25'	SUPERSEDES 11-18-24A	26954

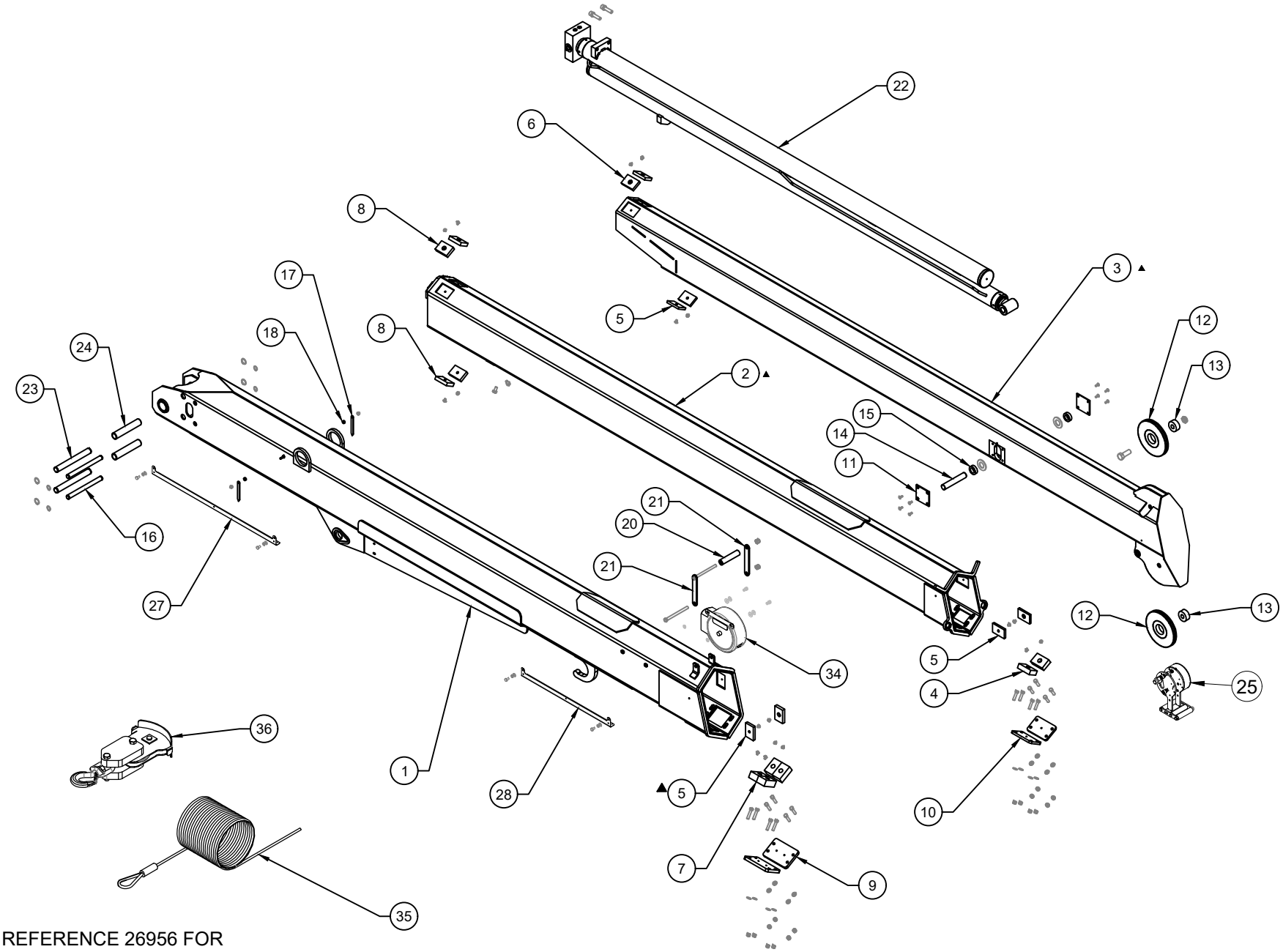

REFERENCE 26956 FOR
REPLACEMENT PARTS LIST

VENTURO®

VENCO VENTURO INDUSTRIES LLC
CINCINNATI, OHIO

TITLE	DATE	SECTION
REPL PARTS DWG, 30' BOOM, 26590	06-11-24	C400
HT45/60 - 30'	SUPERSEDES -	26955

REPLACEMENT PART LIST, 30' BOOM 26590

ITEM NO.	PART NO.	QTY	DESCRIPTION
1	26591	1	PRIMARY BOOM WELDMENT
2	23882	1	SECONDARY BOOM WELDMENT
3	23883	1	TERTIARY BOOM WELDMENT
4	23631-7	2	BOOM PAD; 0.88" THICK
5	23631-3	6	BOOM PAD; 0.38" THICK
6	23631-4	2	BOOM PAD; 0.50" THICK
7	23631-10	4	BOOM PAD; 1.25" THICK
8	23631-5	4	BOOM PAD; 0.63" THICK
9	23677	2	COVER PLATE; PRIM. ADJ. PAD
10	23678	2	COVER PLATE; SEC. ADJ. PAD
11	23116	2	PIN BLOCK; REINFORCING
12	23928	2	BOOM SHEAVE W/ BUSHING
13	23929	2	SPACER; 23927 & 23928 POLY SHEAVES
14	23906	1	PIN; PIVOT, ROD END, EXT. CYLINDER
15	21428	2	BUSHING
16	23904	2	EXTENSION CYLINDER 0.75" THRUST PIN
17	13459	2	ARROW
18	22490	2	SPACER; BOOM ARROW
19	-	-	-
20	21560	1	WIRE ROPE GUIDE; UMHW ROLLER
21	21936	2	WIRE ROPE GUIDE; FLAT, MOUNT
22	23875	1	EXTENSION CYLINDER
23	23905	2	EXTENSION CYLINDER 1" THRUST PIN
24	27283	2	THRUST ROLLER
25	27469-L-C-11	1	ANTI-TWO-BLOCK ASSEMBLY
26	-	-	-
27	26940	1	CABLE GUARD BRACKET (LONG)
28	26940-2	1	CABLE GUARD BRACKET (SHORT)
29	-	-	-
30	-	-	-
31	-	-	-
32	-	-	-
33	-	-	-
▲ 34	26577-1-30	1	CORD REEL ASSY (BLK STEEL CASE)
	26577-4	1	CORD REEL ASSY (BLK/YEL PLASTIC CASE)
35	17094-3/8-125	1	WIRE ROPE; 125 FT, NO HOOK (HT45/50)
	24916-3/8-125	1	WIRE ROPE; 125 FT, HIGH STR (HT60)
36	17949-2	-	LOAD BLOCK ASSEMBLY (HT45)
	17949-5	-	LOAD BLOCK ASSEMBLY (HT60)

REFERENCE 26955 FOR REPLACEMENT PARTS DRAWING

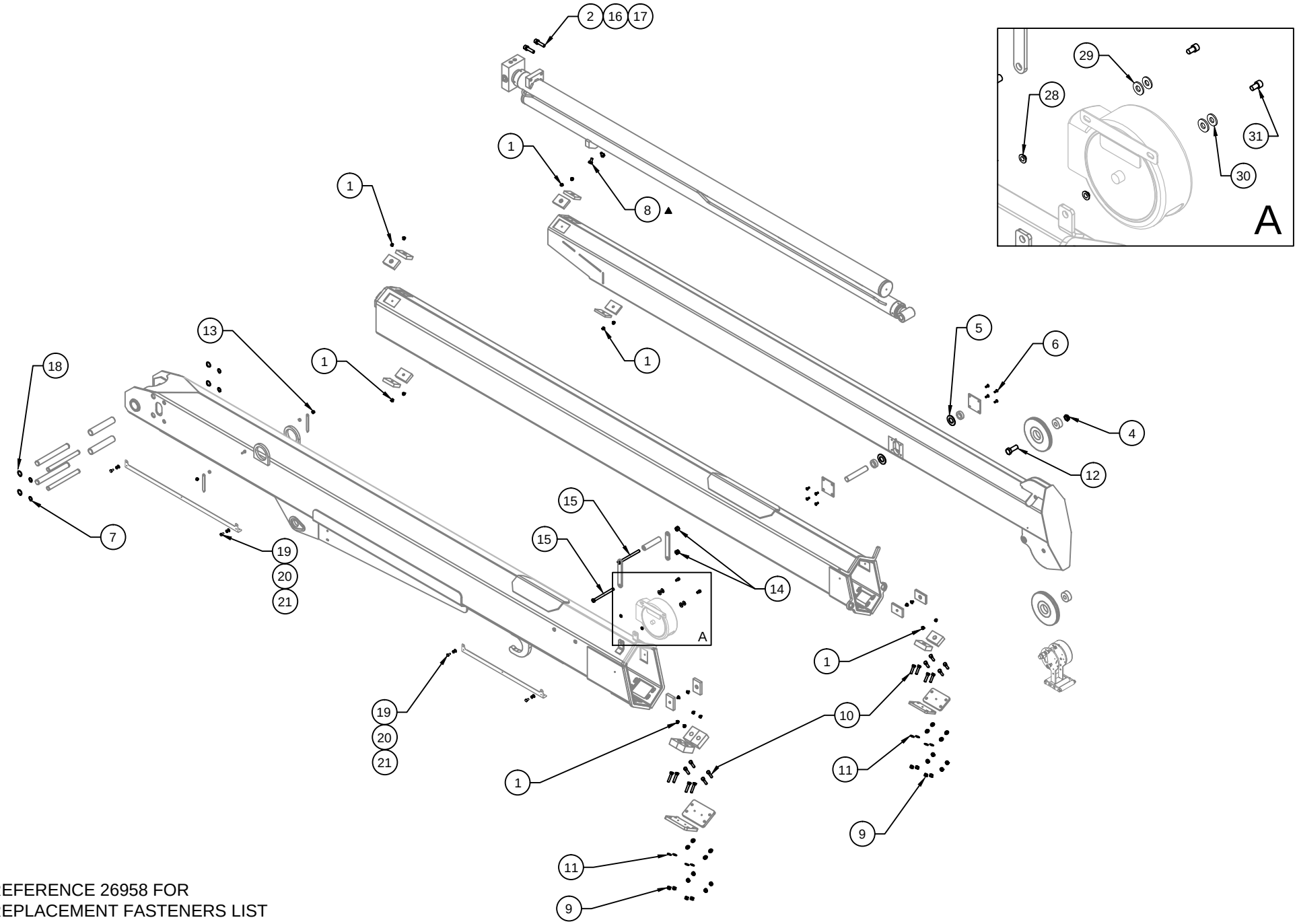

REFERENCE 26958 FOR
REPLACEMENT FASTENERS LIST

VENTURO® VENCO VENTURO INDUSTRIES LLC CINCINNATI, OHIO	TITLE REPL HARDWARE DWG, 30' BOOM 26590	DATE 11-18-24A	SECTION C400
	HT45/60 - 30'	SUPERSEDES 06-11-24	26957

REPLACEMENT FASTENERS LIST, 30' BOOM 26590

ITEM NO.	PART NO.	QTY.	DESCRIPTION
1	!THCS02520038	18	THCS; 1/4-20 x 3/8" LG, S/S
2	14159	1	SHIM KIT
3	-	-	-
4	!LNUT-07510	1	LOCK NUT; 3/4-10, NYLON, ZINC
5	!FWSH-100SAE	2	FLAT WASHER; 1" SAE
6	!CACS02520050S	8	CACS; 1/4-20 x 1/2" LG, S/S
7	!SRNG-075	4	SNAP RING; 3/4"
8	!HHCS03816100N	2	HHCS; NYLON PATCH 3/8-16 X 1", GR. 5 ZINC
9	!LNUT-03816	16	LOCK NUT; 3/8-16, GR. 5, ZINC
10	!HHCS03816175	16	HHCS; 3/8-16 x 1-3/4" LG, GR. 5, ZINC
11	!FWSH-038	16	FLAT WASHER; 3/8", ZINC
12	!HHCS07510350	1	HHCS; 3/4-10 x 3-1/2" LG, GR. 5, ZINC
13	!ANUT-02520S	2	ACORN NUT; 1/4-20, S/S
14	!LNUT-04414	2	LOCK NUT; 7/16-14, NYLON INSERT
15	!HHCS04414550	1	HHCS; 7/16-14 x 5-1/2", GR. 5, ZINC
16	!SHCS05013200	2	SHCS; 1/2-13 x 2"
17	!LWSH-050-HC	2	LOCK WASHER; 1/2, GR. 5, ZINC, HI-COLLAR
18	!SRNG-100	3	SNAP RING; 1"
19	!HHCS03118050S	4	HHCS; 5/16-18 X 1/2", S/S
20	!LWSH-031S	4	LOCK WASHER; 5/16", S/S
21	!FWSH-031S	4	FLAT WASHER; 5/16", S/S
22	-	-	-
23	-	-	-
24	-	-	-
25	-	-	-
26	-	-	-
27	!HHCS02520100S	2	HHCS; 1/4-20 x 1", S/S
▲ ⚠1 28	28198	2	INSULATING SLEEVE WASHER - 5/16"
▲ ⚠1 29	01016	2	FIBER WASHER
30	!FWSH-031	2	FLAT WASHER; 5/16"
31	!SHCS03118063S	2	SHCS; 5/16-18 X 5/8" LG, S/S
32	-	-	-

⚠1 FOR 26577-1-** ONLY (NOT REQ'D FOR 26577-4)

REFERENCE 26957 FOR REPLACEMENT FASTENERS DRAWING

VENTURO®

VENCO VENTURO INDUSTRIES LLC
CINCINNATI, OHIO

TITLE	DATE	SECTION
REPL FAST LIST, BOOM 26590	11-25-24B	C400
HT45/60 - 30'	SUPERSEDES 11-18-24A	26958

COMPACT A2B - 27469-* - REPLACEMENT PARTS LIST

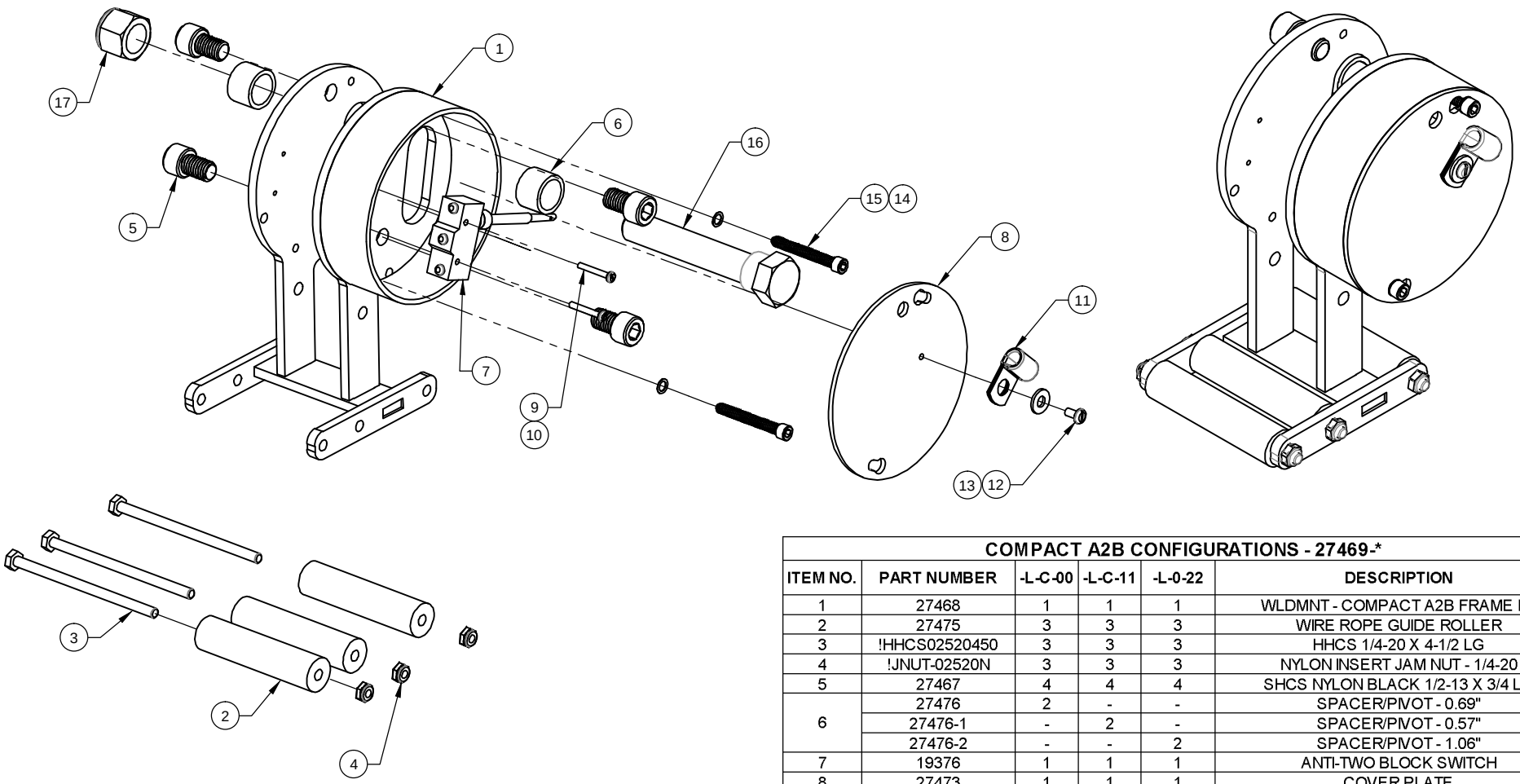

COMPACT A2B CONFIGURATIONS - 27469-*					
ITEM NO.	PART NUMBER	-L-C-00	-L-C-11	-L-0-22	DESCRIPTION
1	27468	1	1	1	WLDMNT - COMPACT A2B FRAME LH
2	27475	3	3	3	WIRE ROPE GUIDE ROLLER
3	!HHCS02520450	3	3	3	HHCS 1/4-20 X 4-1/2 LG
4	!JNUT-02520N	3	3	3	NYLON INSERT JAM NUT - 1/4-20
5	27467	4	4	4	SHCS NYLON BLACK 1/2-13 X 3/4 LG
6	27476	2	-	-	SPACER/PIVOT - 0.69"
	27476-1	-	2	-	SPACER/PIVOT - 0.57"
	27476-2	-	-	2	SPACER/PIVOT - 1.06"
7	19376	1	1	1	ANTI-TWO BLOCK SWITCH
8	27473	1	1	1	COVER PLATE
9	!PHCS#0632100	2	2	2	PHILLIPS HEAD CAP SCREW 6-32 X 1 LONG
10	!LWSH-#06	2	2	2	LOCK WASHER - 6
11	19269	1	1	1	WIRE CLAMP, 3/8 ID VIBRATION DAMPING
12	!PHCS#1032038	1	1	1	PAN HEAD CAP SCREW 10-32 X 3/8 LONG
13	!FWSH-025	1	1	1	FLAT WASHER - 1/4
14	!SHCS02520200SS	2	2	2	SHCS, 1/4-20 X 2.00 LONG, STAINLESS STEEL
15	23379	2	2	2	WASHER, NYLON, BLACK, .375" O.D. X .25" I.D.
16	28362	1	1	-	COMPACT A2B CUT-OUT CAM WELDED ASSY.
	!HHCS07510450	-	-	1	HHCS, 3/4-10 X 4.50 LONG, GR.5
17	LNUT-07510	1	1	1	NYLON INSERT LOCK NUT - 3/4-10

VENTURO®

VENCO VENTURO INDUSTRIES LLC
CINCINNATI, OHIO

TITLE	DATE	SECTION
REPLACEMENT PARTS LIST	7-10-24A	C400
COMPACT A2B - 27469-*	SUPERSEDES 06-11-24	26942

Compact A2B with Stowage Cut-out, Install/Adjustment Instructions (Kit: 28375)

The purpose of the Stowage Cut-out system is to prevent a situation whereby the wire rope is over-tensioned when the load block / wire rope is attached to the stowage hook on the bottom of the primary boom assembly. ***However, the OPERATOR is ultimately responsible for ensuring that the wire rope is not over-tensioned when stowing the wire rope and boom assembly into the boom rest.***

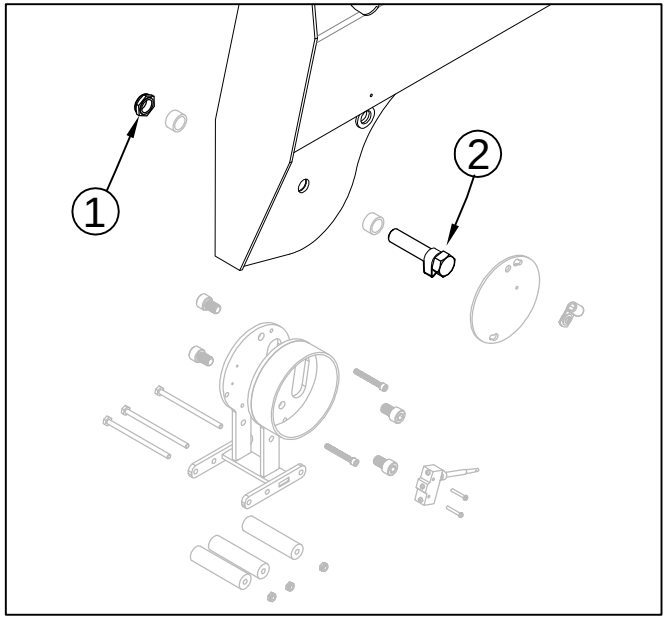

1. Initially, apply a light torque to the nyloc full nut Item #1 (P/N !LNUT-07510), such that the axle bolt & cam welded assembly can be rotated / adjusted in the steps below.
2. Position the cam ***lobe*** Item #2 (P/N 28362) so that it is pointing towards the housing / mechanism
3. Hang the load block on the open stowage hook under the primary boom.
4. Thread the wire rope through the load block in a two-line configuration; the wire rope end / eyelet is pinned in the standard position on the tertiary boom tip
5. Actuate the Winch Up function until the load block and wire rope are ***taut*** enough to prevent the load block from bouncing during transit, ***but do not tighten excessively so as to prevent damage to the wire rope.***
6. Rotate the axle bolt & cam welded assembly towards the housing (clockwise in standard configuration) until the cam lobe makes contact with and trips the wobble micro switch and actuates the A2B function.
7. Once adjusted, torque the nyloc full nut (Item #1) to 100 ft*lbs to prevent further rotational movement of the axle bolt & cam welded assembly.
8. Test the A2B trip-point by slackening and tightening the wire rope / load block assembly by actuating Winch Up/Down. ***NOTE: The point at which the A2B trips WILL vary to some degree, depending upon the winch up speed. It is recommended to actuate the winch up function slowly, which will yield a consistent and repeatable result, in terms of wire rope tension when stowed.***

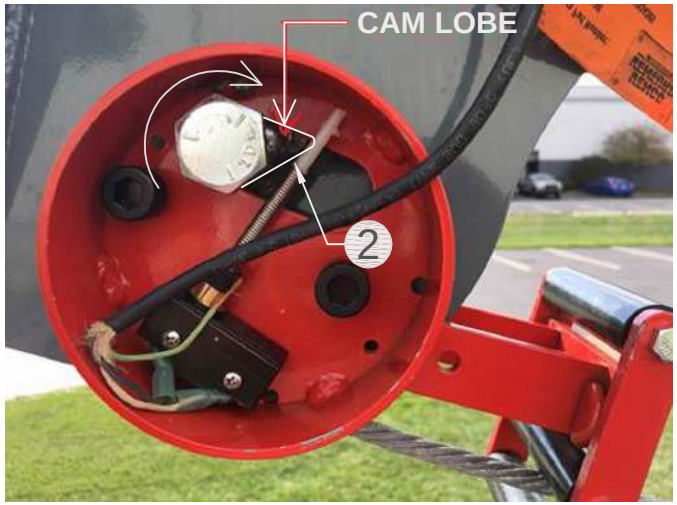

Contact Venturo Tech Support for assistance. 1-800-226-2238 ext. 124

REPLACEMENT PARTS DRAWING; 27274 WINCH

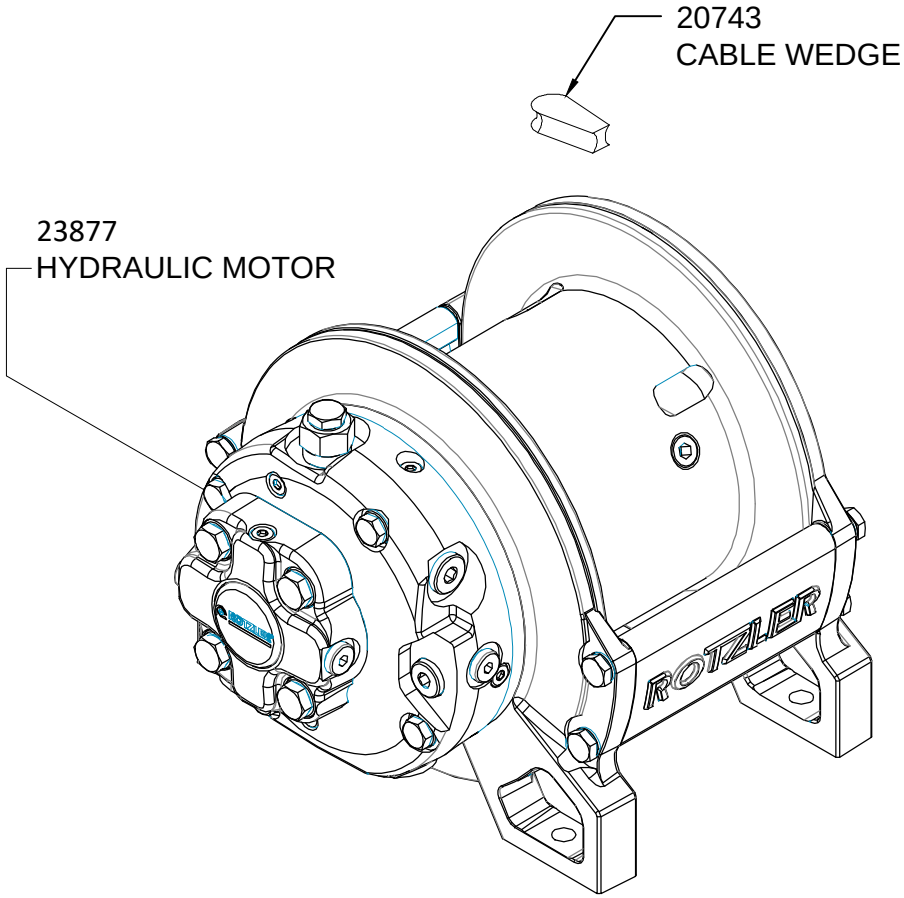

WINCH SEALS PACKAGE: 23848

VENTURO® VENCO VENTURO INDUSTRIES LLC CINCINNATI, OHIO	TITLE REPLACEMENT PARTS DRAWING	DATE 11-10-22-C	SECTION C400
	HT60/66KX SERIES CRANES	SUPERSEDES 04-05-21B	27332

REPLACEMENT PARTS DRAWING - HYDRAULIC COMPONENTS

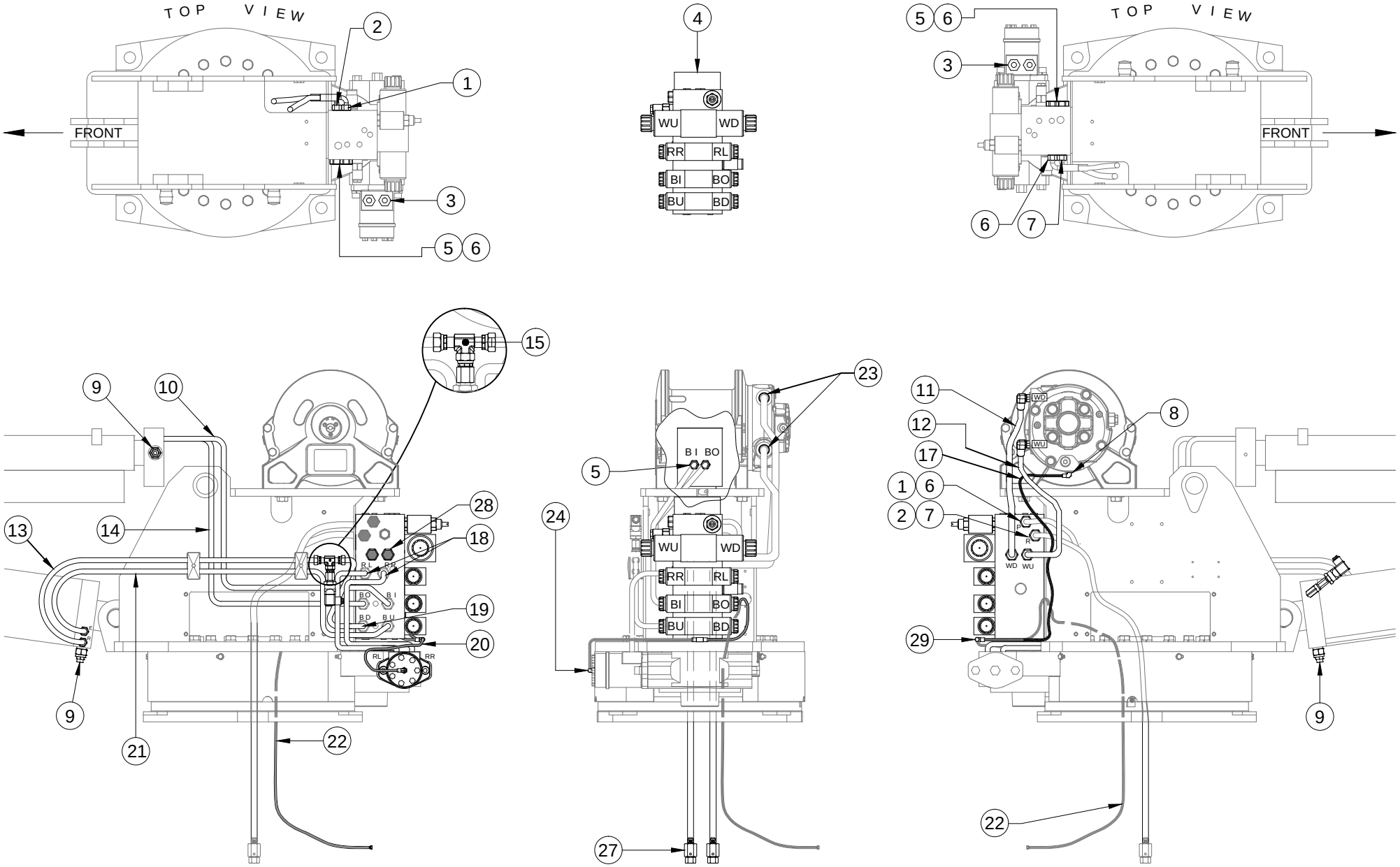

REFERENCE 28518 FOR REPLACEMENT PARTS LIST

HOSE ROUTINGS ARE FOR REFERENCE ONLY

VENTURO® VENCO VENTURO INDUSTRIES LLC CINCINNATI, OHIO	TITLE RPLCMNT PARTS DWG - HYD. COMPONENTS	DATE 07-09-24	SECTION C400
	HT60/66KX VLC SERIES	SUPERSEDES -	28517

REPLACEMENT PARTS LIST - HYD. COMPONENTS

ITEM	PART NO.	QTY HT60	DESCRIPTION	INSTALLATION
1	28477	1	HOSE ASS'Y; PRESSURE	FF6400-0810 (MANIFOLD) TO COMPARTMENT
2	28267	1	HOSE ASS'Y; RETURN	FF6400-0812 (MANIFOLD) TO COMPARTMENT
3	FF6400-0610	2	FITTING; STRAIGHT ADAPTER, 6OFS-10MO	ROTATION MOTOR PORTS
4	22736H-2	1	VALVE MANIFOLD; HI-FLOW, 3000 PSI	-
5	FF6400-0606	10	FITTING; STRAIGHT ADAPTER, 6OFS-6MO	RL/RR/BI/BO/BU/BD MANIFOLD PORTS, CYL. PORTS
6	FF6400-0810	3	FITTING; STRAIGHT ADAPTER, 8OFS-10MO	MANIFOLD PORTS: 'P' (RIGHT), WU/WD (LEFT)
7	FF6400-0812	1	FITTING; STRAIGHT ADAPTER, 8OFS-12MO	MANIFOLD RETURN PORT (RIGHT)
8	3802-0404 (FF3802-4-4)	1	FITTING; ADAPTER, 45° ELBOW, 04MJ-04MBP (MALE BRITISH PARALLEL)	WINCH CASE DRAIN PORT
9	20893	2	COUNTER-BALANCE VALVE	ELEVATION & EXTENSION CYLINDERS
10	27593	1	HOSE ASS'Y; BOOM IN	FF6400-0606 (MANIFOLD) - FF6400-0606 (EXT. CYL.)
11	27025	1	HOSE ASS'Y; WINCH DOWN	FF6400-0810 (MANIFOLD) - FF3801-8-12 (WINCH)
12	27024	1	HOSE ASS'Y; WINCH UP	FF6400-0810 (MANIFOLD) - FF3801-8-12 (WINCH)
13	28052	1	HOSE ASS'Y; BOOM DOWN, CYL-SIDE	23731 - FF6400-0606 (ELEV. CYL. 'R' PORT)
14	27592	1	HOSE ASS'Y; BOOM OUT	FF6400-0606 (MANIFOLD) - FF6400-0606 (EXT. CYL.)
15	FF6602-06-06-06	1	FITTING; TEE, 6MORFS-6FORFS-6MORFS	PRESSURE TRANSDUCER (ROD SIDE)
16	-	-	-	-
17	22953	1	HOSE ASS'Y; CASE DRAIN, 30" LONG	H6801-0404 (WINCH) - H2603-040404 (TEE)
18	27598	2	HOSE ASS'Y; ROTATION LEFT/RIGHT	FF6400-0606 (MANIFOLD) - FF6400-0610 (ROT. MTR.)
19	28053	1	HOSE ASS'Y; BOOM DOWN, MANIFOLD-SIDE	23731 - FF6400-0606 (MANIFOLD)
20	22952	1	HOSE ASS'Y; CASE DRAIN, 13" LONG	H6801-0404 (ROTATION MTR) - H2603-040404 (TEE)
21	28033	1	HOSE ASS'Y; BOOM UP	FF6400-0606 (X2); MANIFOLD - ELEV. CYL. 'E' PORT
22	22903	1	HOSE ASS'Y; CASE DRAIN, 96" LONG	H2603-040404 - COMPARTMENT
23	FF3801-8-12	2	FITTING; 90° ELBOW ADAPTER, 8OFS-12MBP (MALE BRITISH PARALLEL)	WINCH PORTS - 28271, 28272
24	H6801-0404	1	FITTING; 90° ELBOW ADAPTER, 4MJ-4MO	ROTATION MOTOR CASE DRAIN PORT
25	-	-	-	-
26	-	-	-	-
27	22764	2	HYDRAULIC SWIVELS; 8MJ-8FJ	COMPARTMENT - 22765 (PRESS), 22764 (RETURN)
28	H6408-10	2	FITTING; PLUG, 10MO	MANIFOLD (WU/WD PORTS)
29	H2603-040404	1	FITTING; T-SHAPE, 4MJ-4MJ-4MJ	22952, 22953, & 22903 (CASE DRAIN HOSES)

REFERENCE 28517 FOR REPLACEMENT PARTS DRAWING

22736 SERIES VALVE MANIFOLD REPLACEMENT PARTS

PRIORITY FLOW VALVE		
VALVE P/N	MANIFOLD	CRANE
22312-6.00	22736H	HT40/50
22312-7.50	22736H-1	HT66
22312-7.50	22736H-2	HT60
22312-7.50	22736H-3	HT40/45/50
NOT SHOWN - LOCATED ON RIGHT SIDE		

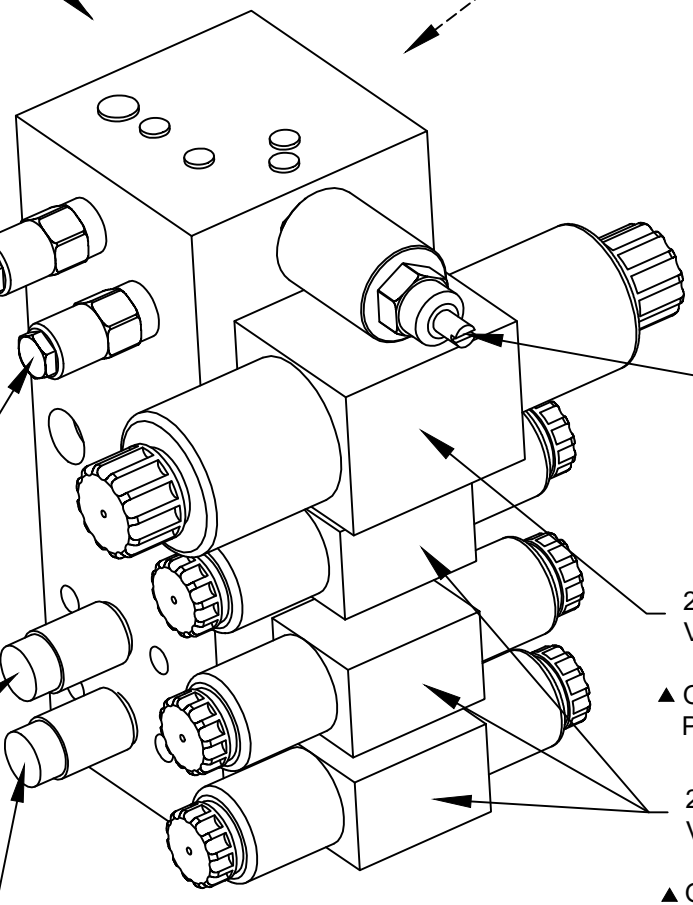

WORK LIGHT INSTALLATION: 28240 (3-WIRE CORD REEL ON VLC CRANES)

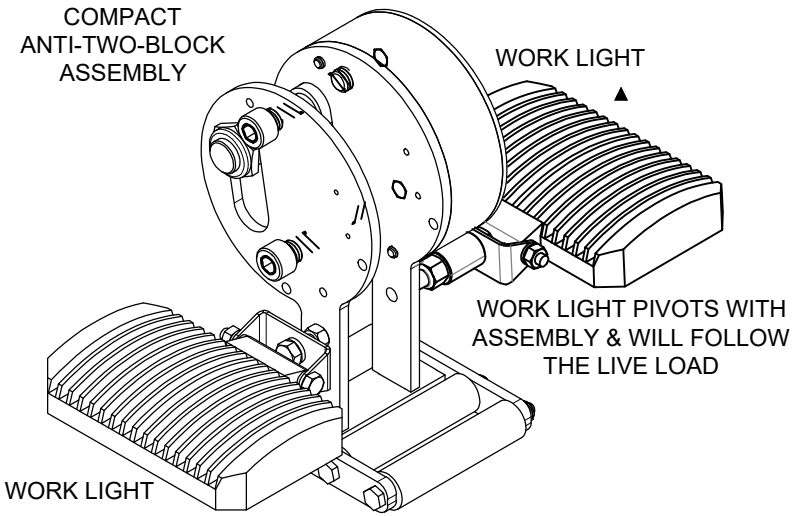

	BILL OF MATERIALS	N/D	28240
#	DESCRIPTION	QTY	PART NUMBER
1	IDWG; WORK LIGHT INSTALLATION, VLC CRANES	1	28188
▲ 2	LED WORK LIGHT	2	27483
3	TERMINAL; 16G, FEMALE, QUICK-CONNECT	5	!TERM16G250QCFI
4	TERMINAL; 16G, MALE, QUICK-CONNECT	4	!TERM16G250QCM
5	WIRE ASS'Y; 16G, BLACK, 28", #6 RING - STRIPPED END	1	22254-BLK280AO
6	WIRE ASS'Y; 16G, BLACK, 28", QCF - STRIPPED END	1	22254-BLK280GO
7	RELAY; 12VDC	1	22739
8	DECAL; WORK LIGHT RELAY	1	16184-2
9	WIRE ASS'Y; 16G, BLACK, 30", MALE PIN - QCF	2	22254-BLK300FG
▲ 10	STANDOFF; .75"OD X .38"ID X 1" LONG, ALUM. (LEFT SIDE MOUNT)	1	24496

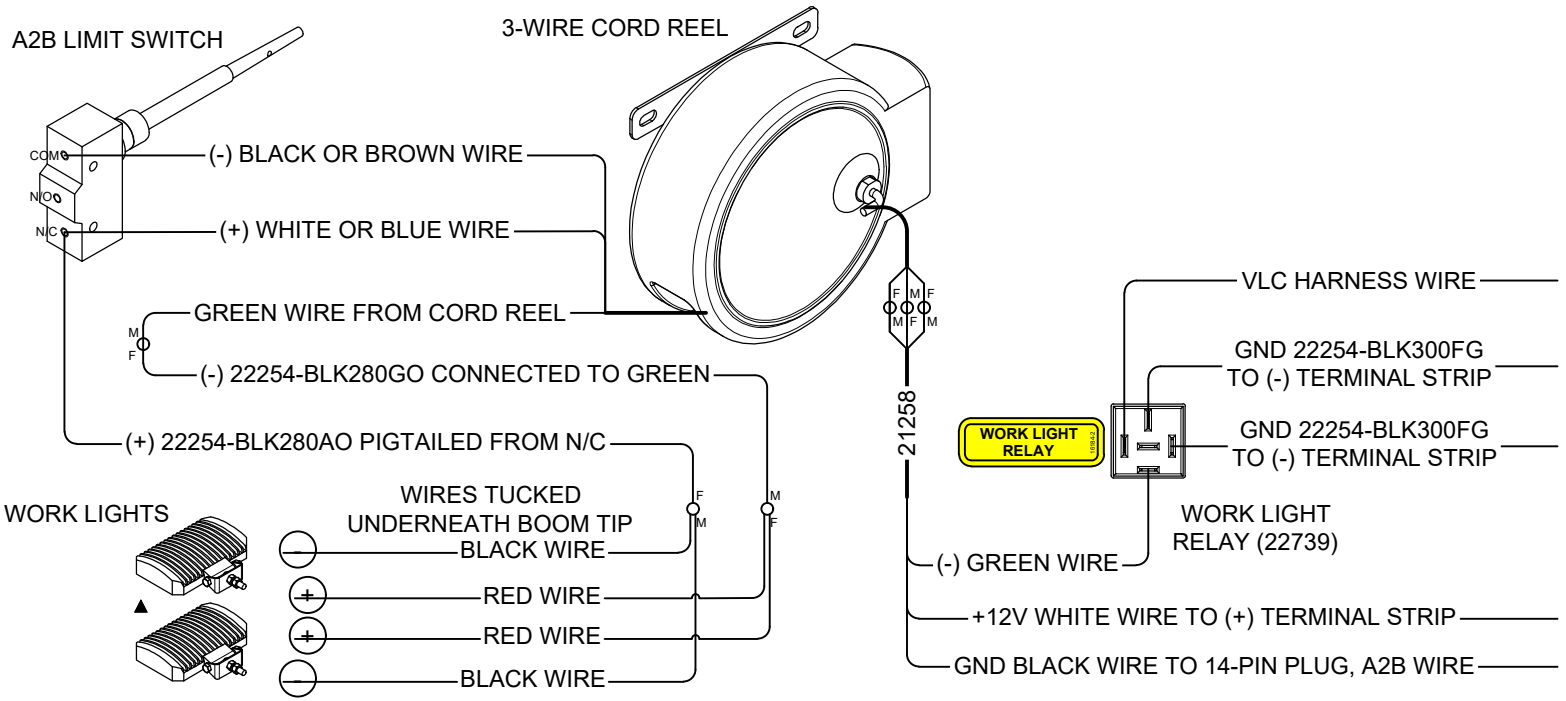

WORK LIGHT ON/OFF
LATCHED
(ON SAME TOGGLE AS HORN)

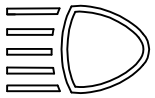

VENTURO®

VENCO VENTURO INDUSTRIES LLC
CINCINNATI, OHIO

TITLE	DATE	SECTION
WORK LIGHT INSTALLATION, 3-WIRE CORD REEL	06-06-26C	C400
VLC CRANES	SUPERSEDES 06-12-24B	28188

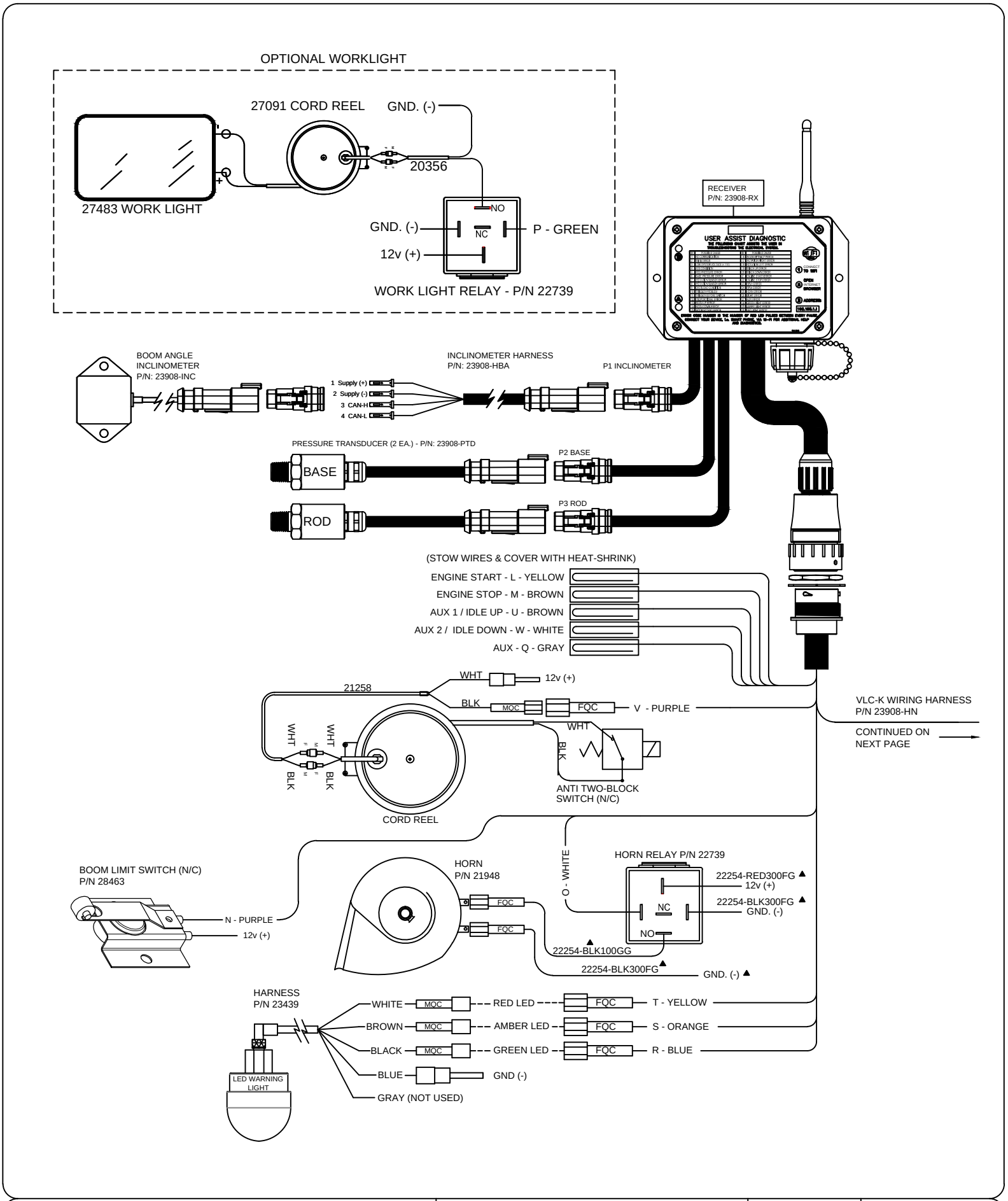

VENTURO® VENCO VENTURO INDUSTRIES LLC CINCINNATI, OHIO	TITLE WIRING DIAGRAM - PG. 1	DATE 02-25-25A	SECTION C400
	VLC-K ("ORANGE") SERIES	SUPERSEDES 06-17-24	26963

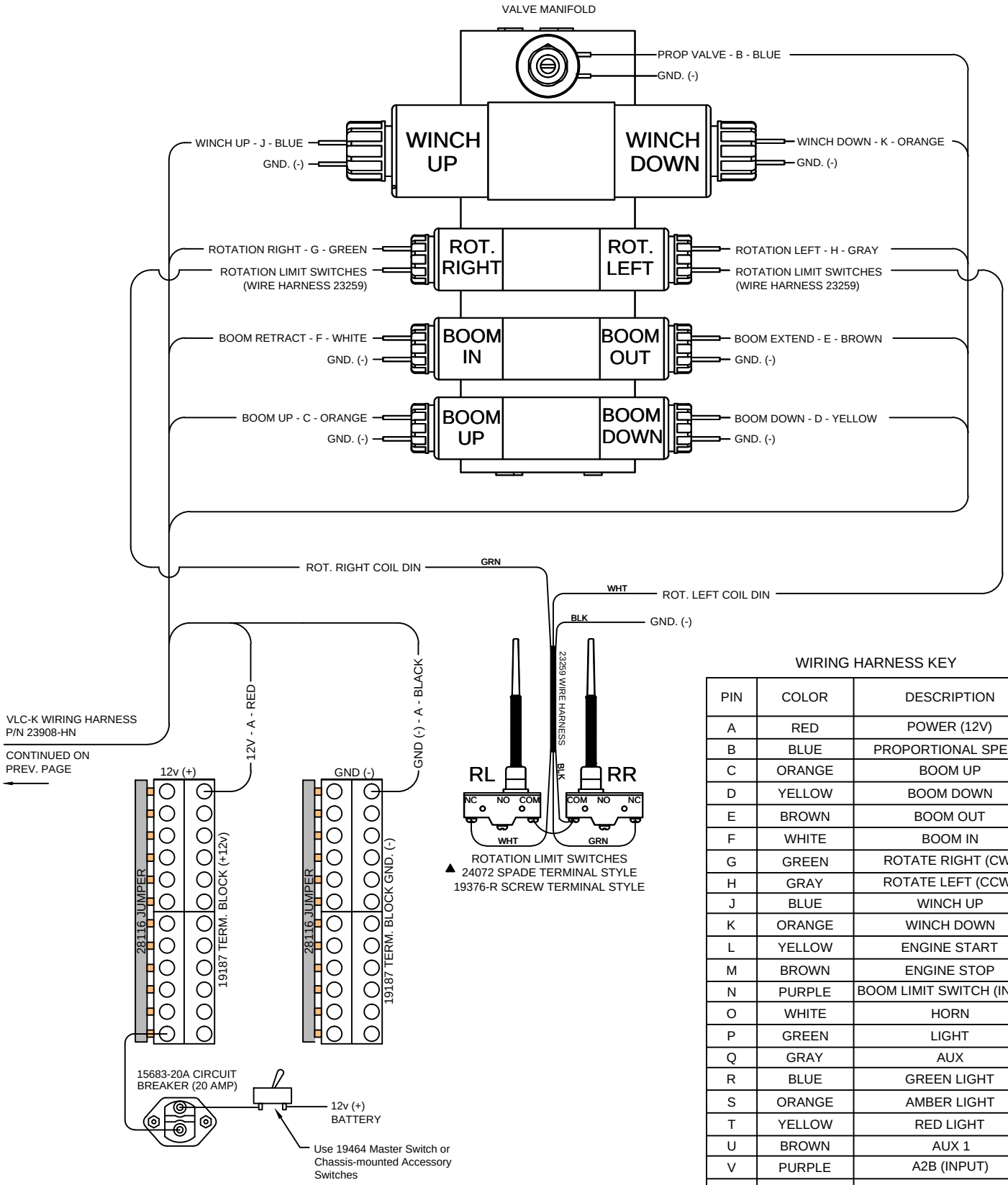

WIRING HARNESS KEY

PIN	COLOR	DESCRIPTION
A	RED	POWER (12V)
B	BLUE	PROPORTIONAL SPEED
C	ORANGE	BOOM UP
D	YELLOW	BOOM DOWN
E	BROWN	BOOM OUT
F	WHITE	BOOM IN
G	GREEN	ROTATE RIGHT (CW)
H	GRAY	ROTATE LEFT (CCW)
J	BLUE	WINCH UP
K	ORANGE	WINCH DOWN
L	YELLOW	ENGINE START
M	BROWN	ENGINE STOP
N	PURPLE	BOOM LIMIT SWITCH (INPUT)
O	WHITE	HORN
P	GREEN	LIGHT
Q	GRAY	AUX
R	BLUE	GREEN LIGHT
S	ORANGE	AMBER LIGHT
T	YELLOW	RED LIGHT
U	BROWN	AUX 1
V	PURPLE	A2B (INPUT)
W	WHITE	AUX 2
X	BLACK	GROUND

VENTURO®

VENCO VENTURO INDUSTRIES LLC
CINCINNATI, OHIO

TITLE	DATE	SECTION
WIRING DIAGRAM - PG. 2	09-23-24A	C400
VLC-K ("ORANGE") SERIES	SUPERSEDES 06-17-24	26964

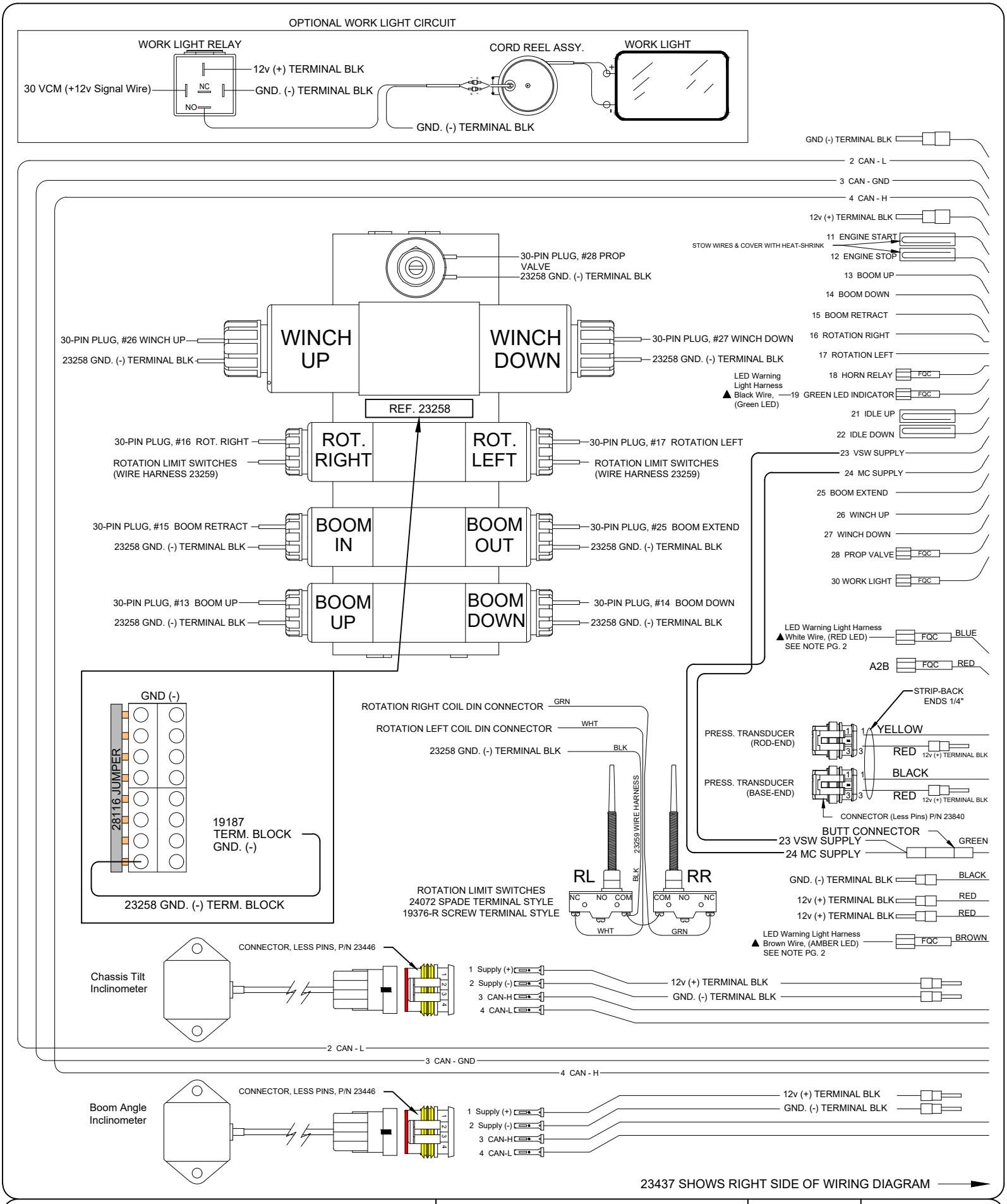

VENTURO®

VENCO VENTURO LLC
CINCINNATI, OHIO

TITLE	DATE	SECTION
WIRING DIAGRAM, PG. 1	09-24-26L	C400
VLC-H ("RED") SERIES	SUPERSEDES 03-24-26K	23436

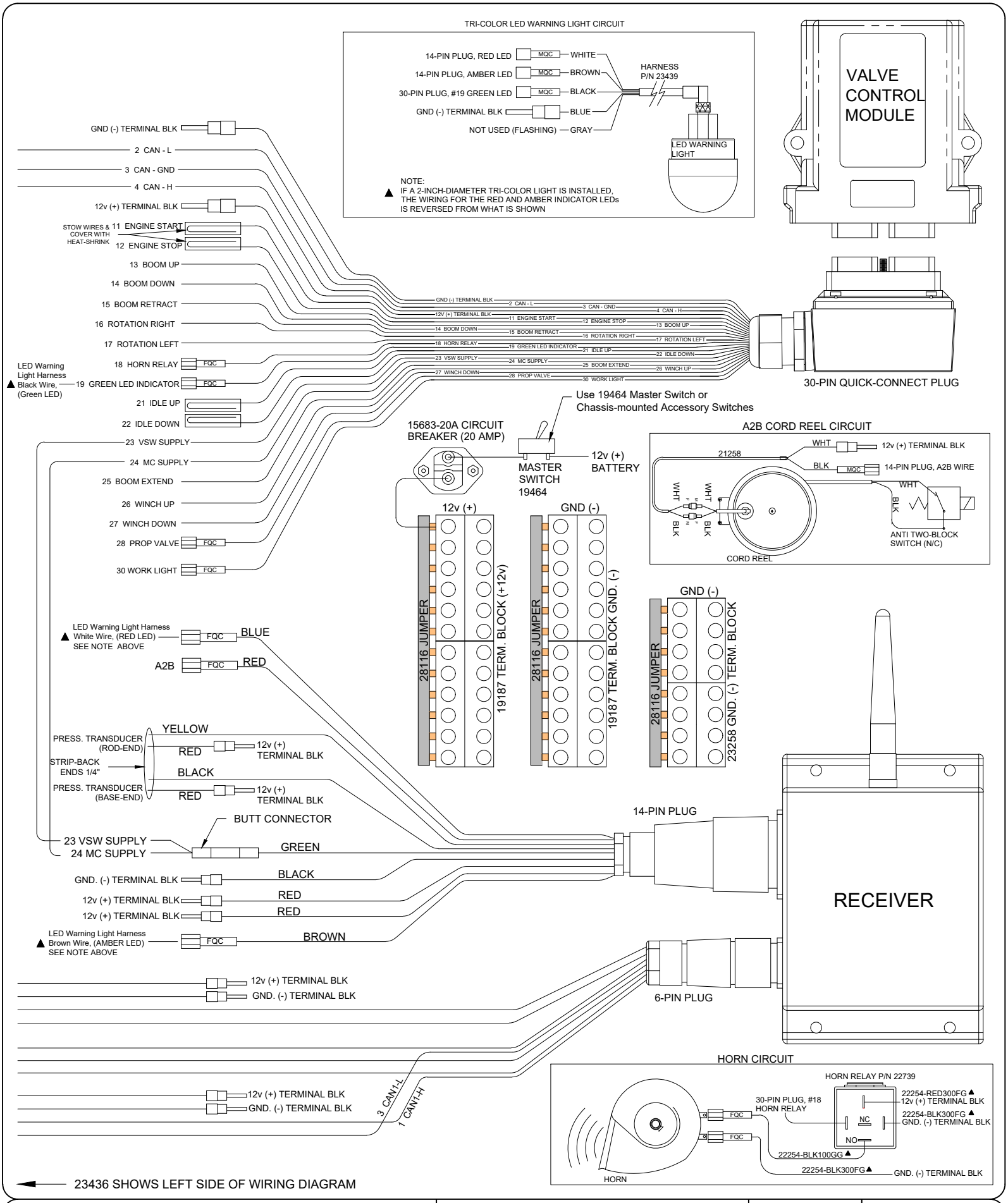

VENTURO®

VENCO VENTURO LLC
CINCINNATI, OHIO

TITLE	DATE	SECTION
WIRING DIAGRAM, PG. 2	09-23-26Q	C400
VLC-H ("RED") SERIES	SUPERSEDES 02-25-25P	23437

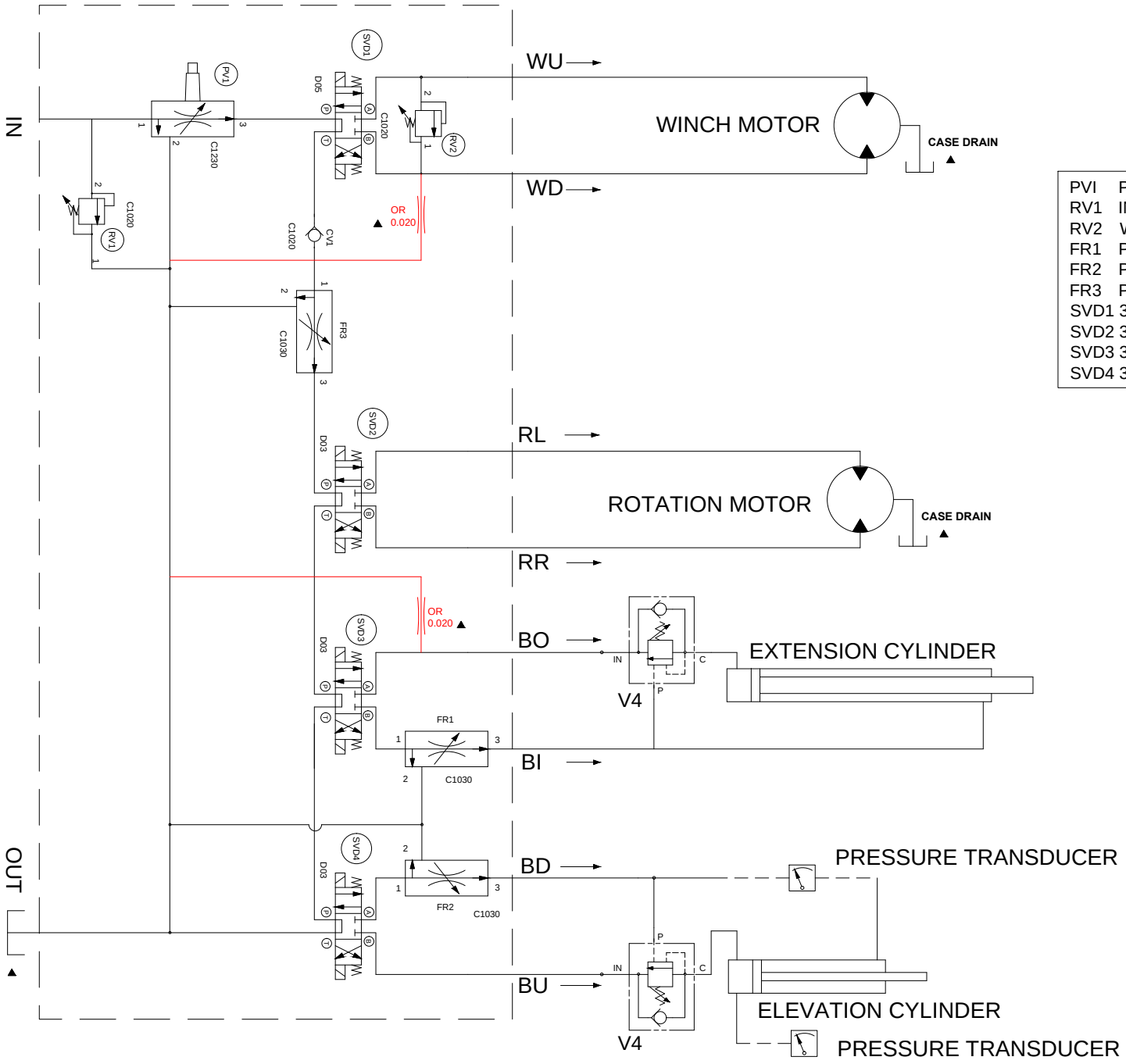

PVI	PROPORTIONAL CONTROL VALVE (SIMPLIFIED REP)
RV1	INLET RELIEF VALVE
RV2	WINCH RELIEF VALVE
FR1	PRIORITY FLOW REGULATOR - 2.25 GPM
FR2	PRIORITY FLOW REGULATOR - 4.00 GPM
FR3	PRIORITY FLOW REGULATOR - 7.50 GPM
SVD1	3 POSITION - 4 WAY VALVE
SVD2	3 POSITION - 4 WAY VALVE
SVD3	3 POSITION - 4 WAY VALVE
SVD4	3 POSITION - 4 WAY VALVE

VENTURO®

VENCO VENTURO INDUSTRIES LLC
CINCINNATI, OHIO

TITLE	DATE	SECTION
HYDRAULIC SYSTEM DIAGRAM	12-04-23D	C400
HT60/66KX VLC SERIES	SUPERSEDES 11-22-22C	23822

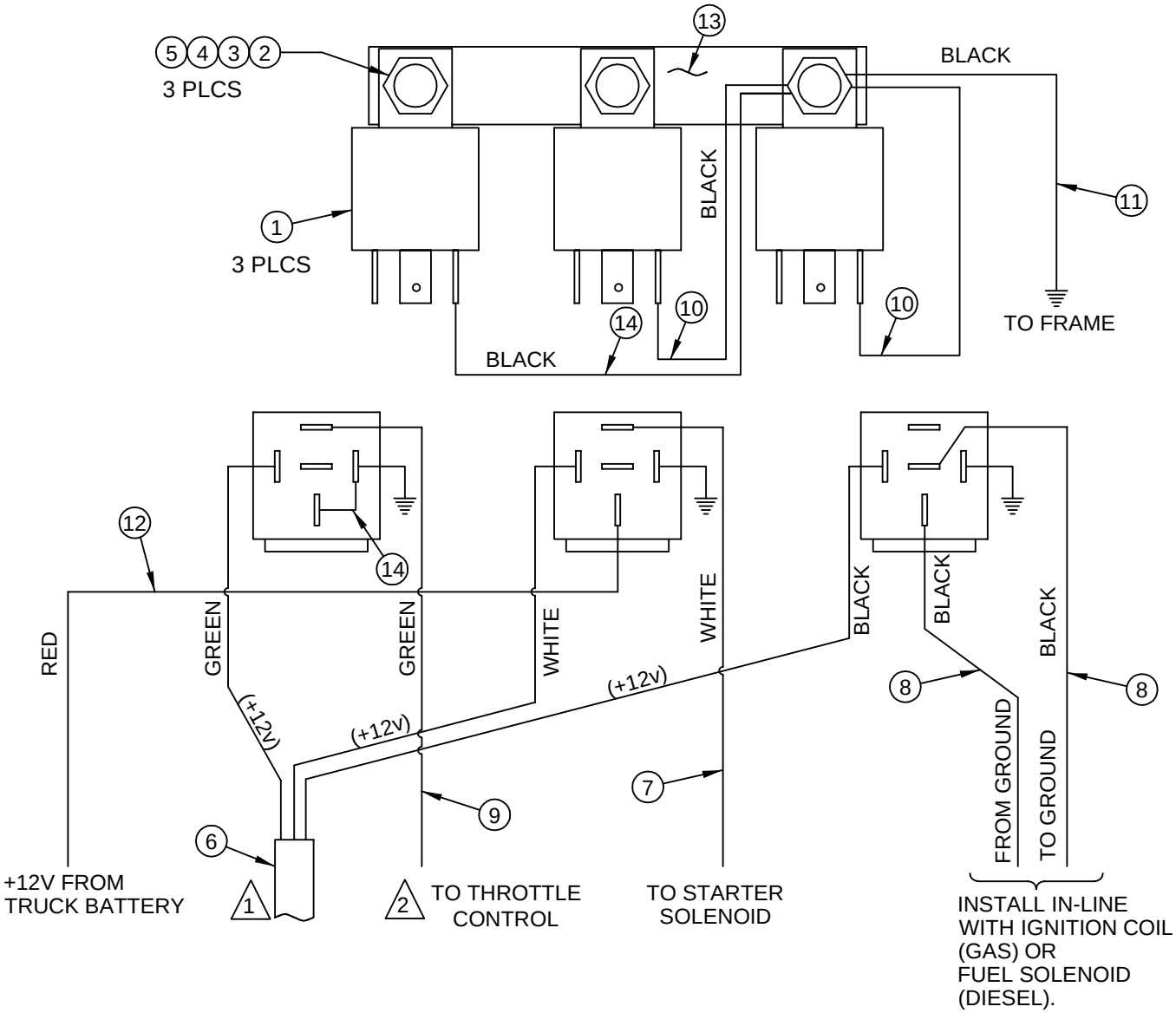

1 USER-CONTROLLED +12V INPUT SIGNALS FROM HETRONIC VLC SYSTEM OR ANALOG PENDANT OR RADIO SYSTEM

2 THROTTLE CONTROL IS DESIGNED TO PROVIDE A GROUND SIGNAL WHEN RELAY IS ACTIVATED

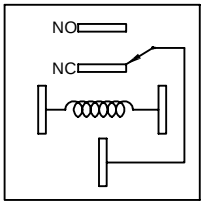

RELAY SCHEMATIC

ITEM	QTY	PART#	DESCRIPTION
1	3	22739	RELAY
2	3	!PHCS#1024075	#10-24 X 3/4 PHIL PAN HD BOLT
3	3	!LWSH-#10	#10 LOCKWASHER
4	3	!FWSH-025	#10 WASHER
5	3	!HNUT-#1024	#10 NUT
6	1	22607	WIRE HARNESS - 12/3 SJO
7	1	22609	WHITE - 16 GAGE ELECTRICAL WIRE - 15 FEET LONG
8	2	22610	BLACK - 16 GAGE ELECTRICAL WIRE - 15 FEET LONG
9	1	22611	GREEN - 16 GAGE ELECTRICAL WIRE - 15 FEET LONG
10	2	22612	BLACK - 16 GAGE ELECTRICAL WIRE - 6 INCHES LONG
11	1	22613	BLACK - 16 GAGE ELECTRICAL WIRE - 8 FEET LONG
12	1	22614	RED - 14 GAGE ELECTRICAL WIRE - 15 FEET LONG
13	1	01181	BUSS BAR
14	1	22619	BLACK - 16GA WIRE ASSY - 6" LONG W/ 3 INCH PIGTAIL

VENTURO®

VENCO VENTURO INDUSTRIES LLC
CINCINNATI, OHIO

TITLE	DATE	SECTION
ENGINE START / STOP THROTTLE CONTROL	06-09-20F	C400
HT CRANES	SUPERSEDES 02-21-14E	22615

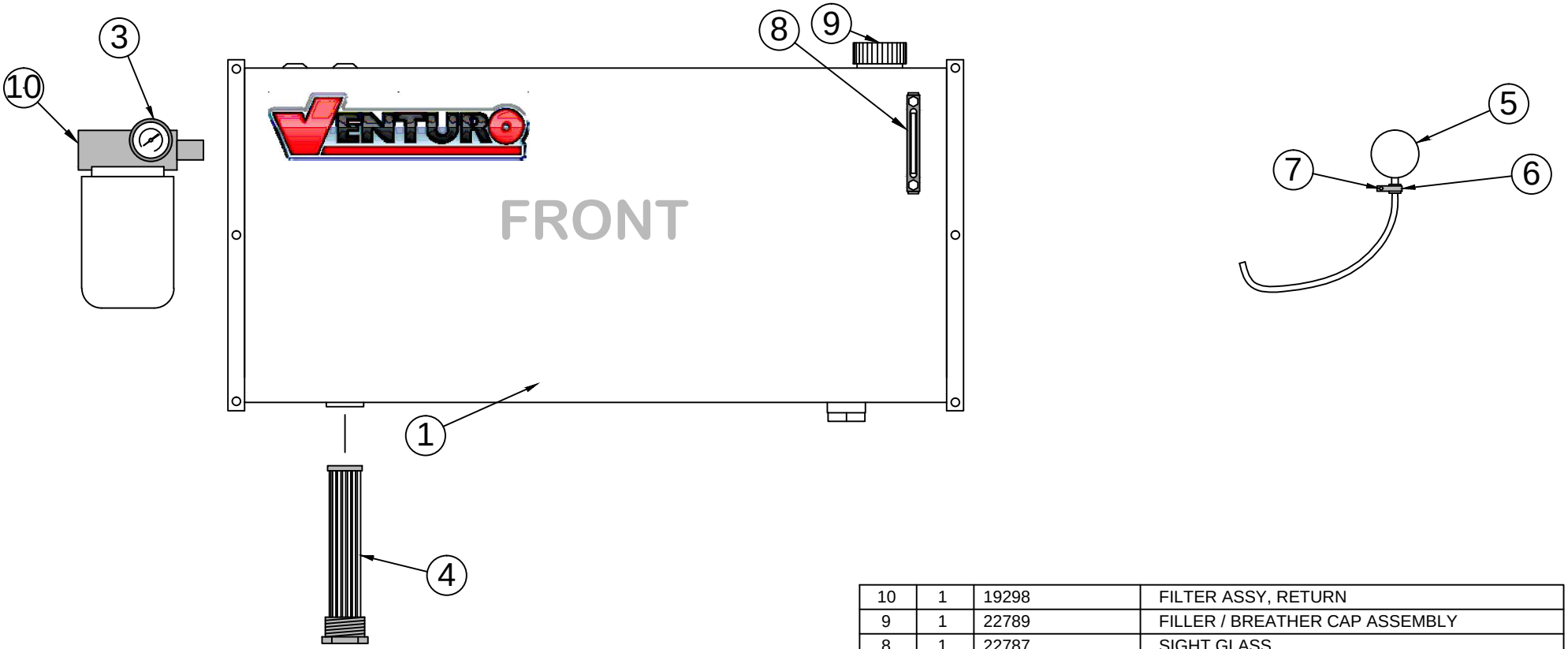

	ITEM	QTY	PART NUMBERS	DESCRIPTION
	10	1	19298	FILTER ASSY, RETURN
	9	1	22789	FILLER / BREATHER CAP ASSEMBLY
	8	1	22787	SIGHT GLASS
	7	1	!HWHS02520075-F	HEX WASHER HEAD 1/4-20 X 3/4 SELF TAPPING
	6	1	19275	CLAMP
	5	1	22730	PRESSURE GAUGE ASSEMBLY
	4	1	22788	SUCTION SCREEN - 100 MESH
	3	1	19297	PRESSURE GAUGE - RETURN
▲	2	-	-	-
▲	* 1	1	22785	HYDRAULIC RESERVOIR - 25 GAL (18" x 40" x 8")
			22998	HYDRAULIC RESERVOIR - 40 GAL (20" x 42" x 11")

VENTURO®

VENCO VENTURO INDUSTRIES LLC
CINCINNATI, OHIO

TITLE	DATE	SECTION
RESERVOIR KIT REPL PARTS	12-09-22D	C400
HT CRANES; 25/40 GAL RESERVOIR	SUPERSEDES 08-04-15C	23224

HT60KX - HWBA*A-****

BOOM CAPACITY HT60KX - 25' BOOM
24914-R - RIGHT SIDE
24914-L - LEFT SIDE

BOOM CAPACITY HT60KX - 30' BOOM
24915-R - RIGHT SIDE
24915-L - LEFT SIDE

MODEL NAME
HT60KX = 24912

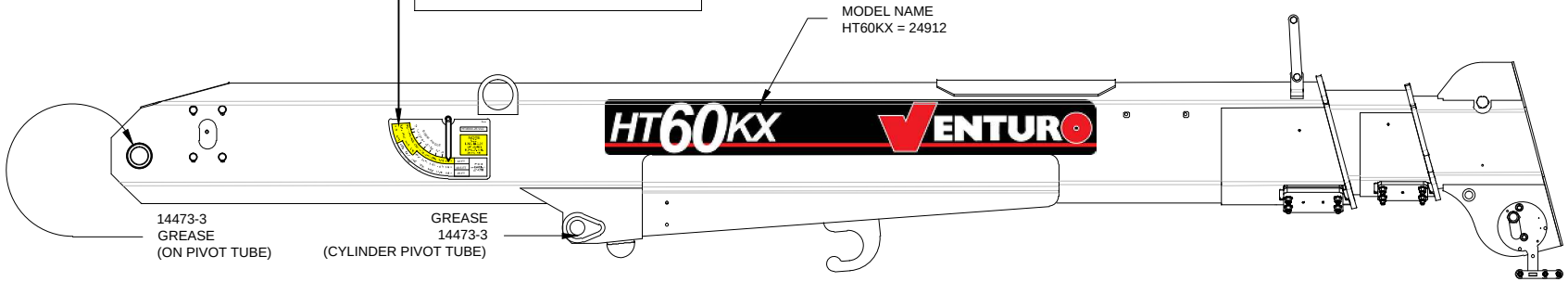

14473-3
GREASE
(ON PIVOT TUBE)

GREASE
14473-3
(CYLINDER PIVOT TUBE)

INSIDE REAR COVER

MANUAL OVERRIDE (LEFT)
22768-1

MANUAL OVERRIDE (RIGHT)
22768-2

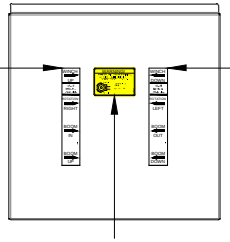

VALVE OVERRIDE
19315-2

VLC, 2.94" x 6"
23742

OIL
14473-1

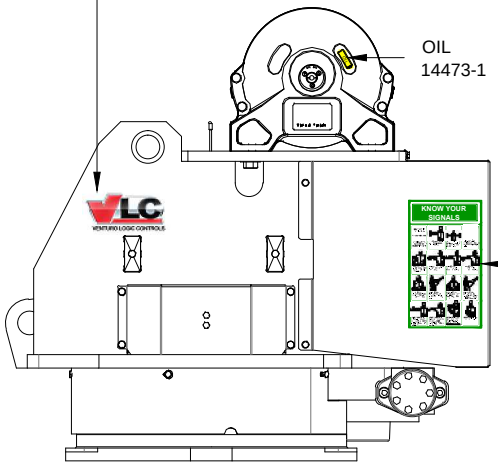

KNOW YOUR SIGNALS
22499

VENTURO MEDIUM
17389

GREASE
14473-3

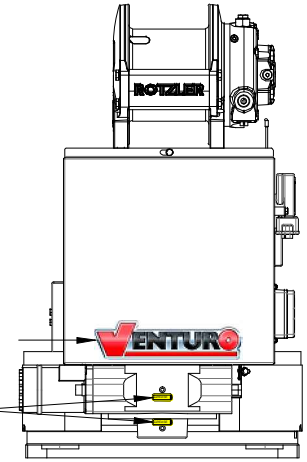

VLC, 2.94" x 6"
23742

DANGER
NOT A PASSENGER LIFT
15391

OVERRIDE INSTRCTNS
20834

CAUTION
15390

DANGER
ELECTRICAL HAZARD
15392

DANGER
UNLAWFUL TO OPERATE
15401

GREASE
14473-3

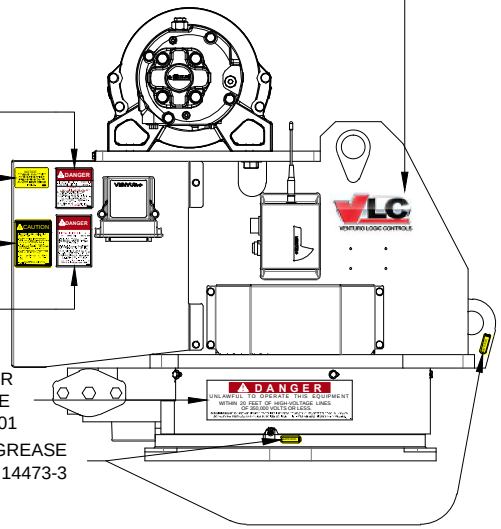

VENTURO® VENCO VENTURO INDUSTRIES LLC CINCINNATI, OHIO	TITLE DECAL PLACEMENT	DATE 11-10-22	SECTION C400
	HT60KX VLC SERIES	SUPERSEDES -	28442

24911 FIELD SERVICE LABEL KIT; HT60KX

QTY -25' BOOM	QTY -30' BOOM	PART #	DESCRIPTION
1	1	19814-1	DECAL; HORN RELAY
1	1	19814-2	DECAL; WORK LIGHT RELAY
1	1	17389	DECAL; VENTURO LOGO, MEDIUM
2	2	24912	DECAL; MODEL NAME, HT60
2	2	23742	DECAL; VLC MODEL SERIES
1	-	24914-R	DECAL; BOOM CAPACITY, 12-18.5-25, RIGHT
1	-	24914-L	DECAL; BOOM CAPACITY, 12-18.5-25, LEFT
-	1	24915-R	DECAL; BOOM CAPACITY, 13-22-30, RIGHT
-	1	24915-L	DECAL; BOOM CAPACITY, 13-22-30, LEFT
1	1	14473-1	DECAL; OIL
8	8	14473-3	DECAL; GREASE
1	1	17813	DECAL; OVERLOAD SENSING SYSTEM
1	1	22499	DECAL; KNOW YOUR SIGNALS
1	1	20834	DECAL; MANUAL OVERRIDE, INSTRUCTIONS
1	1	19315-2	DECAL; MANUAL OVERRIDE SHUT-OFF, PROPORTIONAL
1	1	22768-1	DECAL; MANUAL OVERRIDE, PROPORTIONAL, LEFT
1	1	22768-2	DECAL; MANUAL OVERRIDE, PROPORTIONAL, RIGHT
▲ 2	2	27007-17a	DECAL; LOAD BLOCK RATED CAPACITY
1	1	28441	IDWG: FIELD SERVICE LABEL KIT
1	1	28442	IDWG: DECAL PLACEMENT
1	1	INST-23233	SAFETY MANUAL, VENTURO CRANES
1	1	15397	KIT; ACCIDENTAL PREVENTION SIGNS

VENTURO CRANES LIMITED WARRANTY POLICY

Venturo products are built to last…we guarantee them.
As a purchaser of any new Venturo product covered by warranty, you will receive 1 year of the most complete coverage available…and, at no added cost to you.

1-Year Limited Warranty Policy

This limited policy warrants new products of Venturo to be free from defects in material and workmanship for a period of one (1) year from date of original installation. OEM products or accessories purchased by Venturo as part of or offered with our product will carry the OEM manufacturer's respective warranty. Our warranty covers:

- ***Repair or replacement of product***
- ***Labor to repair or replace product***
- ***Freight to return and/or replace product***

We shall not be liable for any contingent liabilities arising out of the improper function of any products. Warranty shall become void if the product is improperly installed, modified, damaged, abused or used for application other than intended use. There is no warranty of merchantability, fitness for a particular purpose, warranty arising from course of dealing or usage of trade, or any other implied or expressed warranty, except as made specifically herein. This warranty supersedes all previous warranties, written or implied.

Warranty Claims

Venco Venturo Industries LLC will make a good faith effort for prompt correction or other adjustment with respect to any product, which proves to be defective after our inspection and within the warranty period. Before any repairs are attempted or before returning any product, your Venturo Distributor is required to obtain a warranty claim number. This number is necessary for any claim to be considered. To obtain a warranty claim number, Venturo requires the model and serial number. Only authorized Venturo Distributors can perform warranty. For the name and address of your local Venturo Distributor call the **Warranty Claim Department - 513-772-8448.**

WARNING - It is the responsibility of the installer to ensure the installation is completed according to the manufacturer's recommendations, ensure the ultimate user understands how to operate product in a safe manner, and understands the need for regular service and maintenance by an authorized Venturo Distributor. No modifications or alterations may be made to any Venturo product without the expressed written consent of Venco Venturo Industries LLC. Installation of any Venturo product must be done by an authorized Venturo Distributor, to the standards of the industry; including maintenance, service and affixing of all instruction, safety and warning decals. Users should be instructed as to the safe operation at time of delivery. Maintenance, service, operation and safety warning decals are available on request from Venco Venturo Industries LLC.

VENCO VENTURO INDUSTRIES LLC
12110 BEST PLACE | CINCINNATI, OHIO 45241
P: 800-226-2238 | F: 513-326-5427
www.venturo.com