NEW8

INST-28605

OWNER'S MANUAL

*HTBA*C-V*A0*

-

# PARTS & INSTALLATION MANUAL

# 12000H SERIES

Included in this manual:

**12025H & 12030H**

- 12,000 lb Hydraulic Telescopic Service Crane
- Venturo Logic Control System (VLC-H / VLC-K) w/ Proportional Control
- 25 or 30 ft Fully-Powered, Two-Stage Boom Extension

**VENCO VENTURO INDUSTRIES LLC**
12110 BEST PLACE | CINCINNATI, OHIO 45241
800-226-2238

This manual also available online at www.venturo.com.

# 12000H SERIES

INST-28605 - 10/21/2026 (Rev: NEW8)


| | |
|---|---|
| 7607100A | SECTION 100: DESCRIPTION & SPECIFICATIONS |
| 28606 | SPECIFICATIONS & OPERATING FEATURES |
| 28770 | INSTALLATION DIMENSIONS |
| 28607 | INSTALLATION DIMENSIONS |
| 28771 | MOUNTING PLATE DIMENSIONS |
| 28772 | MAXIMUM LOAD CAPACITY CHART |
| 28608 | MAXIMUM LOAD CAPACITY CHART |
| 7607150A | SECTION 150: SAFETY |
| 15394 | VEHICLE & CRANE ELECTRICAL HAZARD INFORMATION |
| 920612 | SAFETY & HAZARDS, GENERAL |
| 19217 | WINCH SAFETY WARNINGS |
| 22181A | SAFETY DECALS DRAWING & LIST |
| 22181B | SAFETY DECALS DRAWING & LIST |
| 22181C | SAFETY DECALS DRAWING & LIST |
| 28773 | SAFETY DECALS DRAWING & LIST |
| 28609 | DECALS; BOOM CAPACITY |
| 23748 | DECALS; VENTURO LOGIC CONTROLS (VLC) |
| 7607200A | SECTION 200: INSTALLATION |
| 28610 | CRANE INSTALLATION, PG. 1 |
| 23806 | CRANE INSTALLATION PG. 2 |
| 23532 | ROTATION STOP LOCATION |
| 20906-12025H | STABILITY PROCEDURE |
| 20906-12030H | STABILITY PROCEDURE |
| 20907 | STABILITY CHART |
| 22825 | 22785 HYDRAULIC TANK DIMENSIONS |
| 22883 | HYDRAULIC COMPONENT INSTALLATION |
| 23015 | CONNECTIONS GUIDE (PAGE 1 OF 2) |
| 23014 | CONNECTIONS GUIDE (PAGE 2 OF 2) |
| 22913 | CONNECTIONS GUIDE (PAGE 3 OF 3) |
| 22245 | WIRE ROPE INSTALLATION |
| 7607300B | SECTION 300: OPERATION & MAINTENANCE |
| 23203 | MAINTENANCE OVERVIEW INFORMATION |
| 23753 | CRANE OPERATION & MAINTENANCE INSTRUCTIONS (PAGE 1 OF 3) |
| 23754 | CRANE OPERATION & MAINTENANCE INSTRUCTIONS (PAGE 2 OF 3) |
| 28436 | CRANE OPERATION & MAINTENANCE INSTRUCTIONS (PAGE 3 OF 3) |
| 26934 | EXPLANATION OF HYDRAULIC VALVE SYSTEMS |
| 28464 | ONE-PART AND TWO-PART LINE CONFIGURATION |
| 7607400A | SECTION 400: REPLACEMENT PARTS |
| 28611 | REPLACEMENT PARTS DRAWING - MECHANISM |
| 28612 | REPLACEMENT PARTS LIST - MECHANISM |
| 28613 | REPLACEMENT FASTENERS DRAWING - MECHANISM |
| 28614 | REPLACEMENT FASTENERS LIST - MECHANISM |
| 28775 | REPLACEMENT PARTS DRAWING - 24946 BOOM |
| 28776 | REPLACEMENT PARTS LIST - 24946 BOOM |
| 28777 | REPLACEMENT FASTENERS DRAWING - 24946 BOOM |
| 28778 | REPLACEMENT FASTENERS LIST - 24946 BOOM |
| 28615 | REPLACEMENT PARTS DRAWING - 24700 BOOM |
| 28616 | REPLACEMENT PARTS LIST - 24700 BOOM |
| 28617 | REPLACEMENT FASTENERS DRAWING - 24700 BOOM |
| 28618 | REPLACEMENT FASTENERS LIST - 24700 BOOM |
| 28779 | A2B STOWAGE CUT-OUT |
| 28619 | REPLACEMENT PARTS DRAWING A2B STOWAGE CUT-OUT |
| 27332 | REPLACEMENT PARTS DIAGRAM - 27274 WINCH |
| 28621 | REPLACEMENT PARTS DRAWING - 27254 LOAD BLOCK PARTS |
| 28517 | REPLACEMENT PARTS DRAWING - HYDRAULIC COMPONENTS |
| 28782 | REPLACEMENT PARTS LIST - HYDRAULIC COMPONENTS |
| 22940 | REPLACEMENT PARTS DIAGRAM; 22736H HYDRAULIC VALVE MANIFOLD |
| 28188 | WORK LIGHT INSTALLATION INSTRUCTIONS; COMPACT A2B MOUNT |
| 26963 | WIRING DIAGRAM - VLC-K ("ORANGE"), PG 1/2 |
| 26964 | WIRING DIAGRAM - VLC-K ("ORANGE"), PG 2/2 |
| 23436 | WIRING DIAGRAM - VLC-H ("RED"), PG 1/2 |
| 23437 | WIRING DIAGRAM - VLC-H ("RED"), PG 2/2 |
| 23822 | HYDRAULIC SYSTEM DIAGRAM |
| 22615 | ENGINE START/STOP & THROTTLE CONTROL |
| 23224 | RESERVOIR KITS; REPLACEMENT PARTS DRAWING & LISTS |
| 28622 | DECAL PLACEMENT |
| 28623 | FIELD SERVICE LABEL KIT |
| 25431 | NOTES |
| 12-00073_VNT1 | WARRANTY PAGE |

# SECTION 100

# DESCRIPTION

# &

# SPECIFICATIONS

VENCO VENTURO INDUSTRIES LLC
CINCINNATI, OHIO

## SPECIFICATIONS

PTO-driven hydraulic system

12-volt electrical controls (e.g. valve coils)

66,000 ft-lb overturning moment (or as limited by truck stability)

Venturo Logic Controls (VLC) crane control management system

Hydraulic winch - 6,000 lb single-line capacity with automatic load brake

Hydraulic boom elevation

Hydraulic boom extension

Hydraulic 400° rotation

VLC radio remote control pendant

In-compartment electrical control panel (optional)

Accessories (optional):

Stabilizers: 27695-PHX, 27789-PHX

Pedestal: 27656

Boom Rest: 20381-1, VT1199

| | | |
|---|---|---|
| TELESCOPIC BOOM | 11.5 - 24.5 ft | 13.5 - 29.8 ft |
| BOOM ELEVATION | -5° TO 75° | -5° TO 75° |
| BOOM HYD EXTENSION | 13 ft | 16.3 ft |
| BOOM MANUAL EXT | - | - |
| CAPACITY | 2450 lb @ 25.0 ft | 2000 lb @ 30.0 ft |
| | 12000 lb @ 5.0 ft | 12000 lb @ 5.0 ft |
| WIRE ROPE | 7/16" x 100 ft | 7/16" x 125 ft |

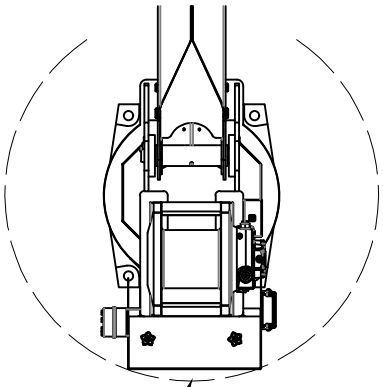

R22$\frac{1}{4}$"
SWING RADIUS

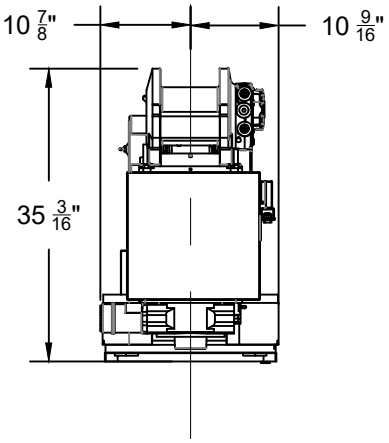


CENTER OF ROTATION

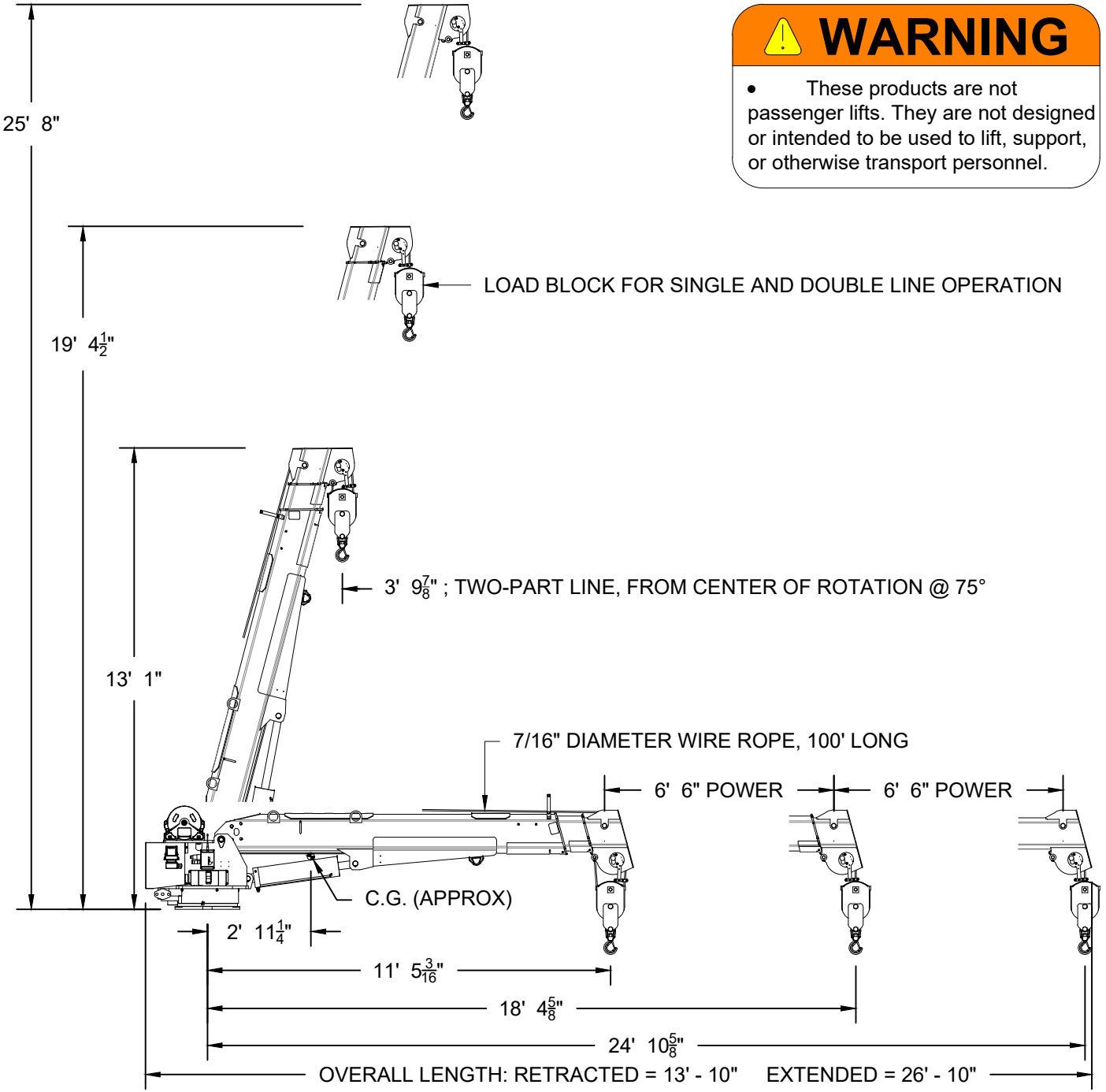


## ⚠ WARNING

- These products are not passenger lifts. They are not designed or intended to be used to lift, support, or otherwise transport personnel.

VENTURO®

VENCO VENTURO INDUSTRIES LLC
CINCINNATI, OHIO

| TITLE | DATE | SECTION |
|---|---|---|
| INSTALLATION DIMENSIONS | 09-25-25 | C100 |
| 12025H | SUPERSEDES<br>- | 28770 |

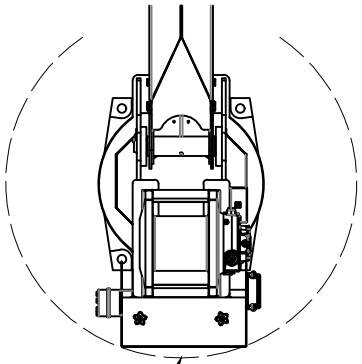

R22$\frac{1}{4}$"
SWING RADIUS

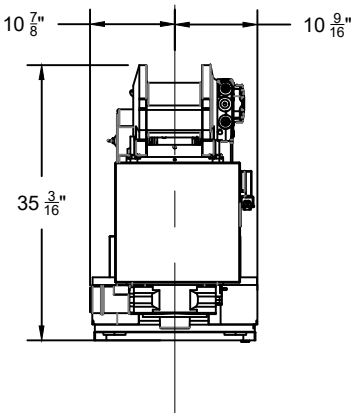


CENTER OF ROTATION

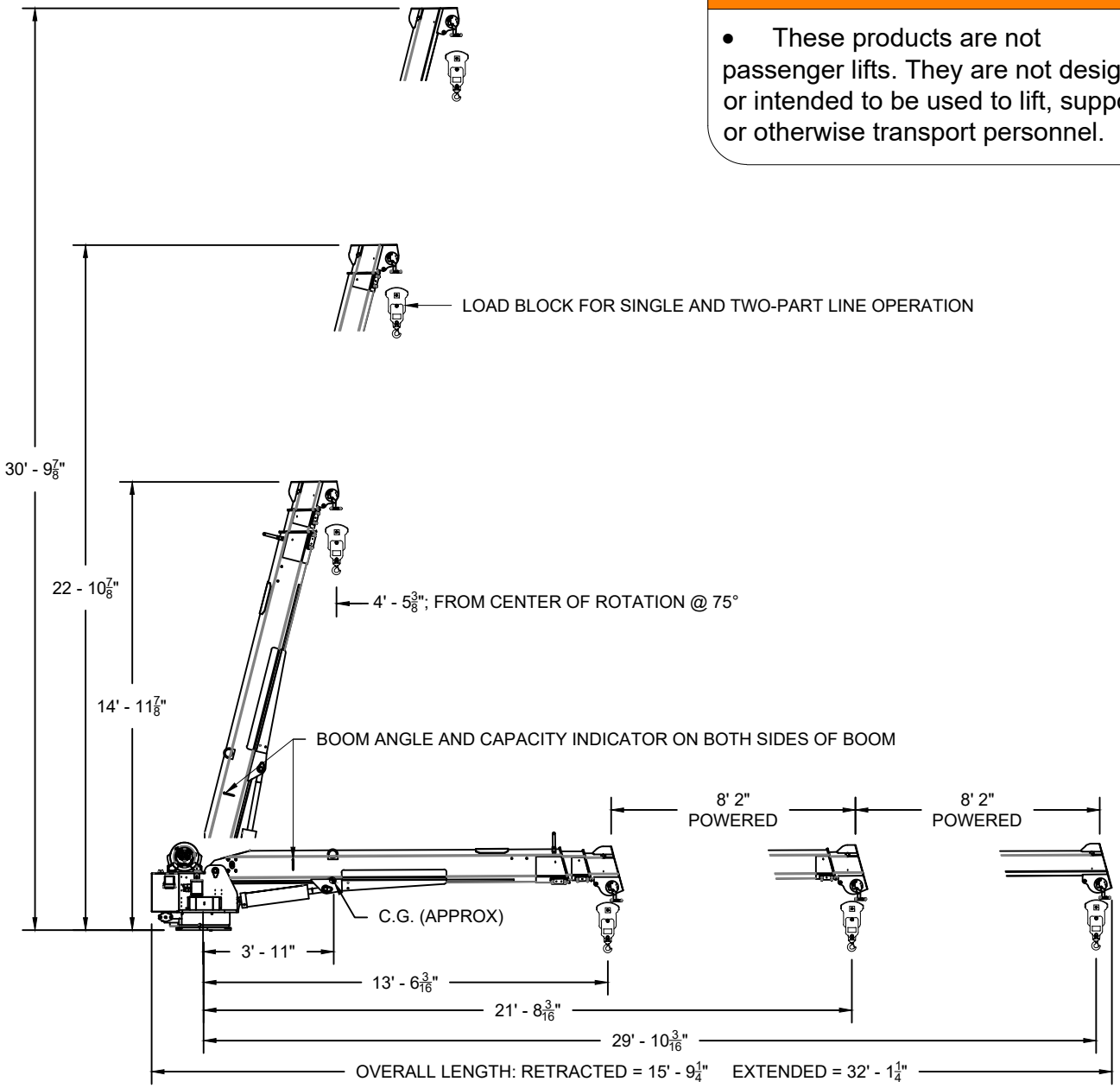


## ⚠ WARNING

- These products are not passenger lifts. They are not designed or intended to be used to lift, support, or otherwise transport personnel.

VENTURO®

VENCO VENTURO INDUSTRIES LLC
CINCINNATI, OHIO

| TITLE | DATE | SECTION |
|---|---|---|
| INSTALLATION DIMENSIONS | 08-20-25 | C100 |
| 12030H | SUPERSEDES<br>- | 28607 |

# 12025H/12030H BASE MOUNTING DIMS

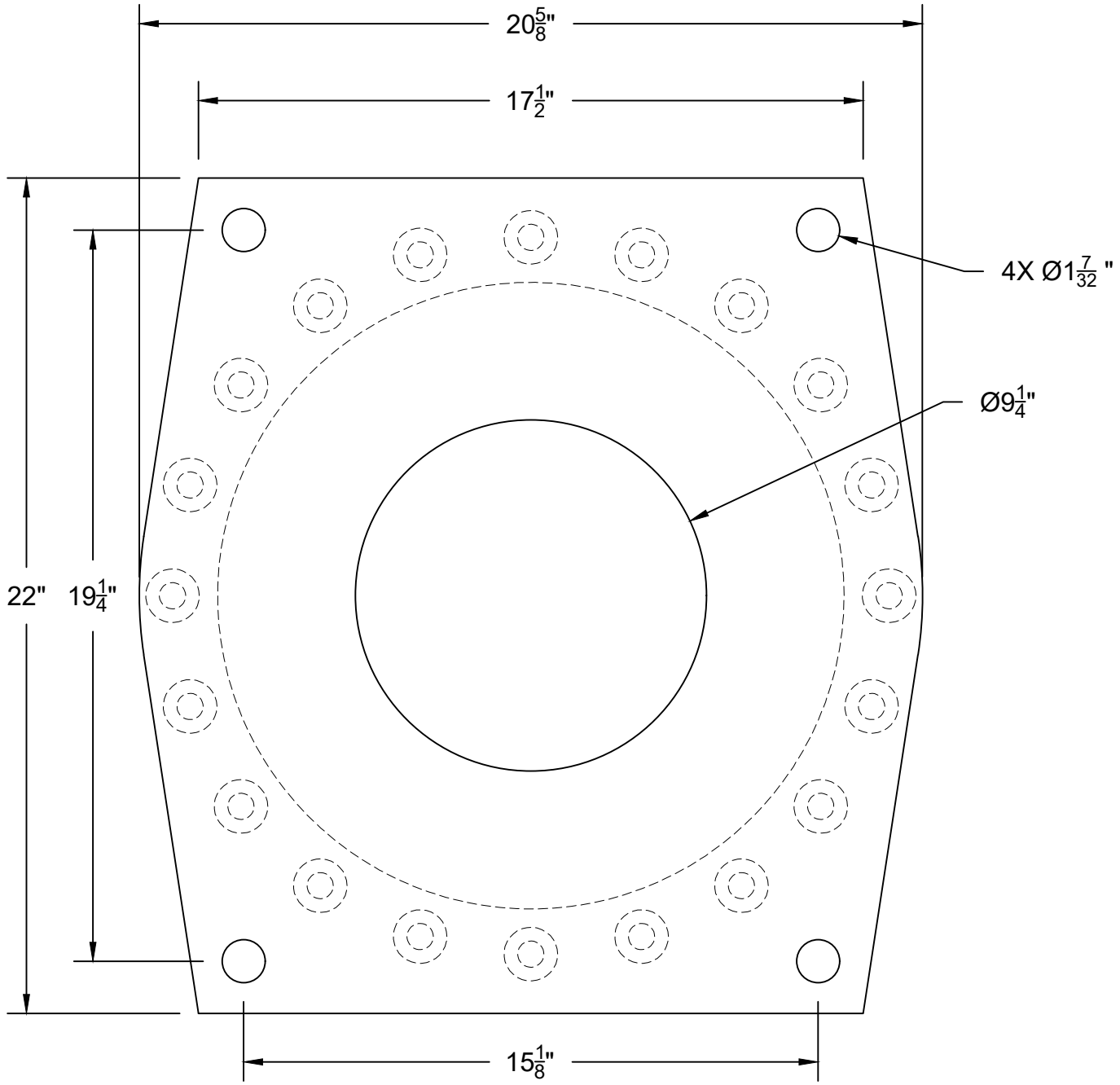


| | | | |
|---|---|---|---|
| VENTURO® VENCO VENTURO INDUSTRIES LLC CINCINNATI, OHIO | TITLE<br>BASE MOUNTING DIMS | DATE<br>09-25-25 | SECTION<br>C100 |
| | 12025H/12030H | SUPERSEDES<br>- | 28771 |

12025H, 12' - 18.5' - 25' BOOM, WITH VENTURO LOGIC CONTROL SYSTEM (VLC)

CRANE SERIAL NUMBER: _____

# MAXIMUM LOAD CAPACITY CHART

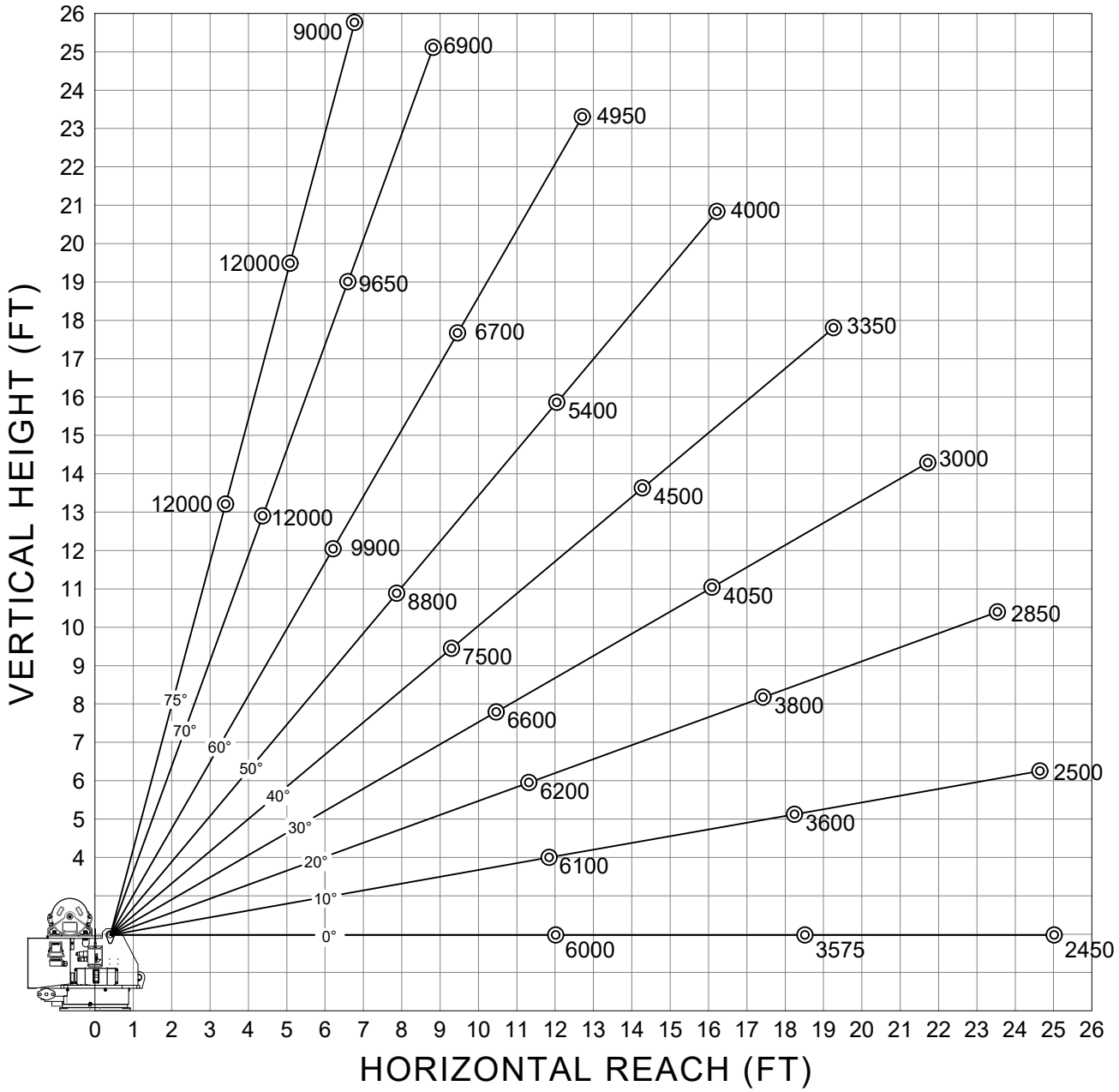


WEIGHT OF LOAD HANDLING DEVICES ARE PART OF THE LOAD AND MUST BE DEDUCTED FROM THE GROSS CAPACITY.

**LOAD BLOCK USAGE**

1-PART LINE FOR LOADS LESS THAN 6000 LBS

2-PART LINE FOR LOADS OF 6000 LBS AND GREATER

WEIGHT OF LOAD BLOCK = 67 LBS

| | | | |
|---|---|---|---|
| VENTURO® VENCO VENTURO INDUSTRIES LLC CINCINNATI, OHIO | TITLE<br>MAXIMUM LOAD CAPACITY | DATE<br>09-25-25 | SECTION<br>C100 |
| | 12025H | SUPERSEDES<br>- | 28772 |

12030H, 13' - 22' - 30' BOOM, WITH VENTURO LOGIC CONTROL SYSTEM

CRANE SERIAL NUMBER: _____

# MAXIMUM LOAD CAPACITY CHART

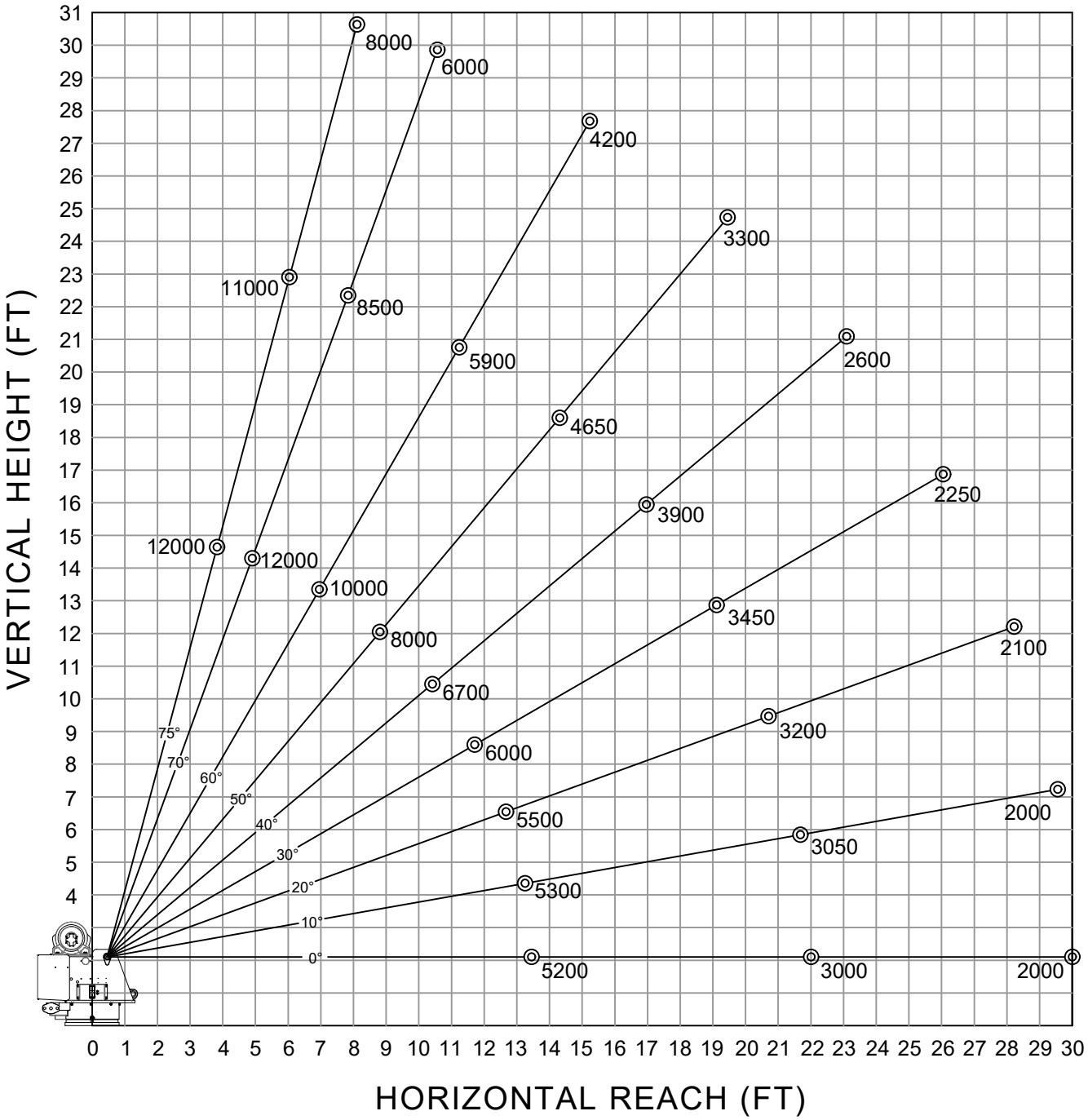


WEIGHT OF LOAD HANDLING DEVICES ARE PART OF THE LOAD AND MUST BE DEDUCTED FROM THE GROSS CAPACITY.

**LOAD BLOCK USAGE**

1-PART LINE FOR LOADS LESS THAN 6000 LBS

2-PART LINE FOR LOADS OF 6000 LBS AND GREATER

WEIGHT OF LOAD BLOCK = 67 LBS

| | | | |
|---|---|---|---|
| VENTURO® VENCO VENTURO INDUSTRIES LLC CINCINNATI, OHIO | TITLE<br>MAXIMUM LOAD CAPACITY | DATE<br>08-20-25 | SECTION<br>C100 |
| | 12030H | SUPERSEDES<br>- | 28608 |

# SECTION 150

# SAFETY

VENCO VENTURO INDUSTRIES LLC
CINCINNATI, OHIO

7607150A

# VEHICLE & CRANE MOUNTED ELECTRICAL HAZARD SIGN APPLICATION & INFORMATION

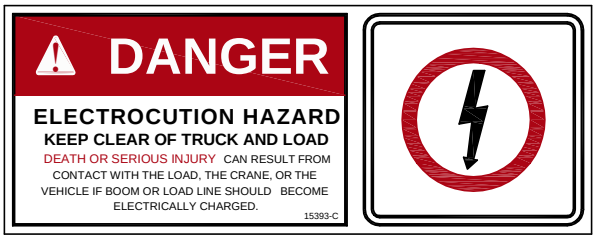


SIGN NO. 15393 DISPLAYS THE INTERNATIONAL SYMBOL FOR ELECTRICITY AND WARNS OF DANGER FROM AN ELECTRICALLY CHARGED VEHICLE, CRANE, OR LOAD. FOUR ARE RECOMMENDED (ONE FOR EACH SIDE AND ONE FOR EACH END OF VEHICLE) TO BE APPLIED IN LOCATIONS WHICH ARE READILY VISIBLE TO GROUND PERSONNEL.

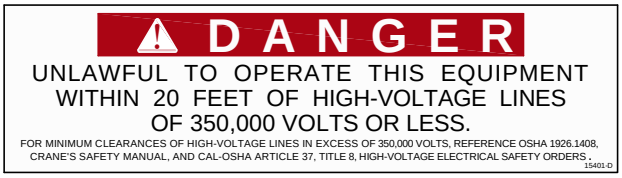


SIGN NO. 15401 PROVIDES ADDITIONAL WARNING OF LEGAL REQUIREMENTS WHEN OPERATING NEAR HIGH VOLTAGE LINES. THIS SIGN IS PLACED ON THE CONTROL PENDANT SIDE OF BOOM.

Table A - Minimum Clearance Distances

| Voltage (nominal, kV, alternating current) | Minimum clearance distance (feet) * |
|---|---|
| Up to 50 | 10 |
| over 50 - 200 | 15 |
| over 200 - 350 | 20 |
| over 350 - 500 | 25 |
| over 500 - 750 | 35 |
| over 750 - 1000 | 45 |
| Over 1000 | (as established by the utility owner/operator or registered professional engineer who is a qualified person with respect to electrical power transmission and distribution). |

Table T - Minimum Clearance Distances While Traveling With No Load

| Voltage (nominal, kV, alternating current) | While traveling - minimum clearance distance (feet) * |
|---|---|
| 0 - 0.75 | 4 |
| over 0.75 - 50 | 6 |
| over 50 - 345 | 10 |
| over 345 - 750 | 16 |
| over 750 - 1000 | 20 |
| Over 1000 | (as established by the utility owner/operator or registered professional engineer who is a qualified person with respect to electrical power transmission and distribution). |

* NOTE: ENVIRONMENTAL CONDITIONS SUCH AS FOG, SMOKE, OR PRECIPITATION MAY REQUIRE INCREASED CLEARANCES

# CRANE SAFETY AND HAZARDS
# HT SERIES CRANES

## CAUTIONS

1. INSPECT VEHICLE AND CRANE, INCLUDING OPERATION, PRIOR TO USE DAILY.
2. DO NOT USE THIS EQUIPMENT EXCEPT ON SOLID, LEVEL SURFACE WITH CRANE MOUNTED ON FACTORY-RECOMMENDED TRUCK.
3. BEFORE OPERATING THE CRANE, REFER TO MAXIMUM LOAD (CAPACITY) CHART ON CRANE FOR OPERATING (LOAD) LIMITATIONS.
4. DO NOT OPERATE, WALK, OR STAND BENEATH BOOM OR A SUSPENDED LOAD.
5. ATTACH PENDANT CORD SUPPORT SNAP TO ATTACHMENT POINT BEFORE PLUGGING IN PENDANT.
6. UNPLUG PENDANT AND DISENGAGE PTO SYSTEM WHEN CRANE NOT IN USE.
7. FOR TRAVEL, BOOM MUST BE IN STOWED POSITION.

## DANGER

- THIS CRANE IS NOT A PASSENGER LIFT
- IT IS NOT DESIGNED OR INTENDED TO BE USED TO LIFT, SUPPORT, OR OTHERWISE TRANSPORT PERSONNEL.

## YOU MUST NOT OPERATE THIS CRANE UNLESS

1. YOU HAVE BEEN TRAINED IN THE SAFE OPERATION OF THIS CRANE
   *AND*
2. YOU KNOW AND FOLLOW THE SAFETY AND OPERATING RECOMMENDATIONS CONTAINED IN THE MANUFACTURER'S MANUALS, YOUR EMPLOYER'S WORK RULES, AND APPLICABLE GOVERNMENT REGULATIONS. AN UNTRAINED OPERATOR SUBJECTS HIMSELF AND OTHERS TO DEATH OR SERIOUS INJURY.

## ELECTROCUTION HAZARD

- THIS MACHINE IS NOT INSULATED.
- MAINTAIN SAFE CLEARANCES FROM ELECTRICAL LINES AND APPARATUS.
- YOU MUST ALLOW FOR BOOM SWAY, ROCK OR SAG, AND ELECTRICAL LINE AND LOADLINE SWAYING.
- THIS LIFTING DEVICE DOES NOT PROVIDE PROTECTION FROM CONTACT WITH OR PROXIMITY TO AN ELECTRICALLY CHARGED CONDUCTOR.
- YOU MUST MAINTAIN A CLEARANCE OF AT LEAST 20 FEET BETWEEN ANY PART OF THE CRANE, LOADLINE, OR LOAD, AND ANY ELECTRICAL LINE OR APPARATUS CARRYING UP TO 350 kV (SEE NEW CHART). ADDITIONAL CLEARANCES ARE REQUIRED FOR VOLTAGES IN EXCESS OF 50,000 VOLTS. REFER TO DRAWING 15394 FOR ADDITIONAL INFORMATION.
- **DEATH OR SERIOUS INJURY** WILL RESULT FROM CONTACT OR INADEQUATE CLEARANCE.

# WINCH SAFETY WARNINGS

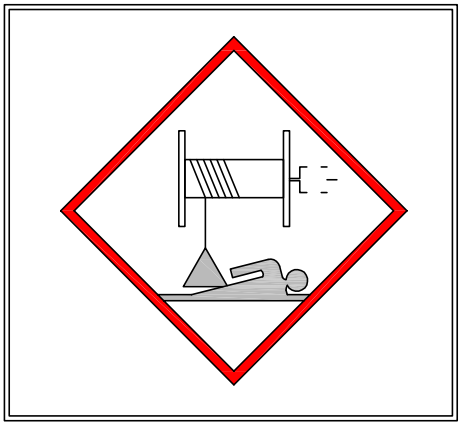

**DANGER**

- DO NOT DISENGAGE WINCH UNDER LOAD

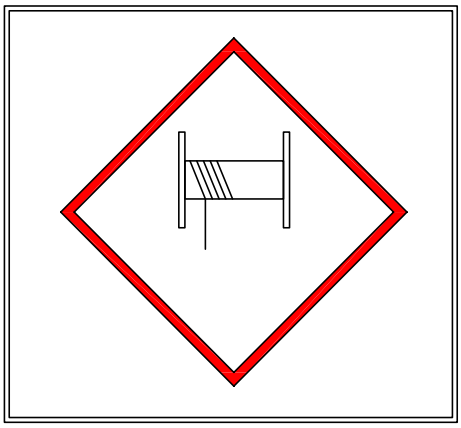

**DANGER**

- THE LAST [5] (DEAD) WRAPS OF WIRE ROPE MUST BE LEFT ON TO ASSIST WIRE ROPE CLAMP IN HOLDING LOAD

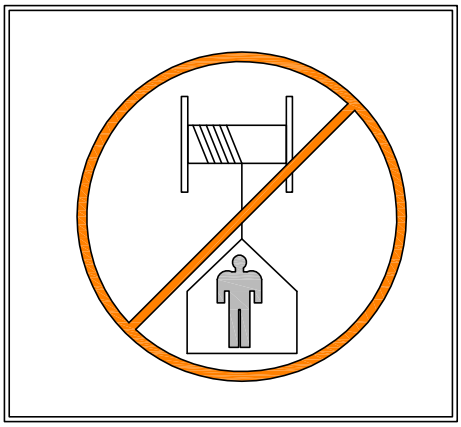

**WARNING**

- Winches are not to be used to lift, support, or otherwise transport personnel

PART NO.: 15398

DECAL: UNPLUG REMOTE CONTROL

FUNCTION: To inform the operator to unplug remote control when not being used.

QUANTITY: 1

PLACEMENT: Right side of housing.

PART NO.: 15401

DECAL: UNLAWFUL TO OPERATE

FUNCTION: To inform the operator of proper operation in vicinity of power lines.

QUANTITY: 1

PLACEMENT: Right side of housing.

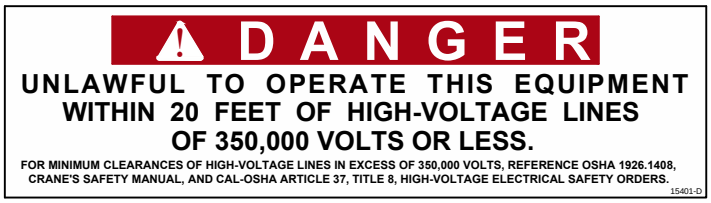


PART NO.: 19314-1 [LEFT] & -2 [RIGHT]

DECAL: MANUAL OVERRIDE (NON-PROP)

FUNCTION: To inform the operator of manual override locations.

QUANTITY: 1 EACH

PLACEMENT: Inside of rear cover.

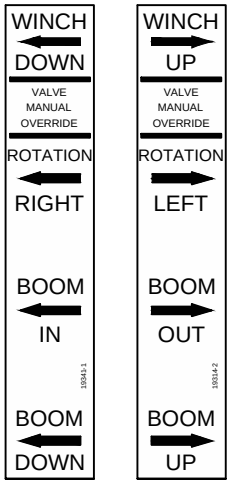


PART NO.: 22768-1 [LEFT] & -2 [RIGHT]

DECAL: MANUAL OVERRIDE (PROPORTIONAL)

FUNCTION: To inform the operator of manual overide locations.

QUANTITY: 1

PLACEMENT: Inside of rear cover.

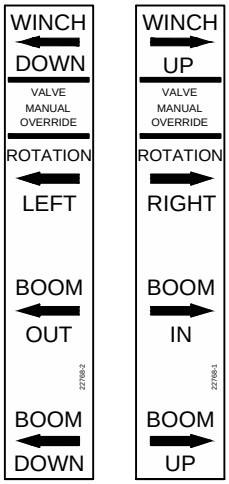


| | | | |
|---|---|---|---|
| VENTURO® VENCO VENTURO INDUSTRIES LLC CINCINNATI, OHIO | TITLE<br>DECAL DRAWING & LIST | DATE<br>11-30-22E | SECTION<br>C150 |
| | HT40/50/60/66 SERIES | SUPERSEDES<br>02-21-14D | 22181A |

▲

PART NO.: 23068-1 [LEFT] & -2 [RIGHT]

DECAL: MANUAL OVERRIDE
(HT66KXX w/ TH-2 Winch ONLY)

FUNCTION: To inform the operator of manual overide locations.

QUANTITY: 1

PLACEMENT: Inside of rear cover.

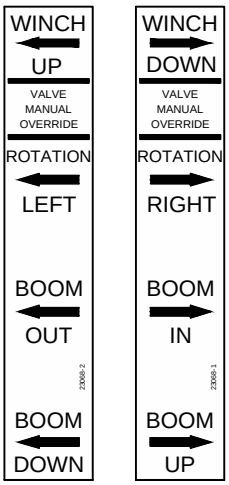


PART NO.: 19315-1

DECAL: SHUT OFF (NON-PROPORTIONAL)

FUNCTION: To show the operator how to override master shut off valve.

QUANTITY: 1

PLACEMENT: Inside rear cover.

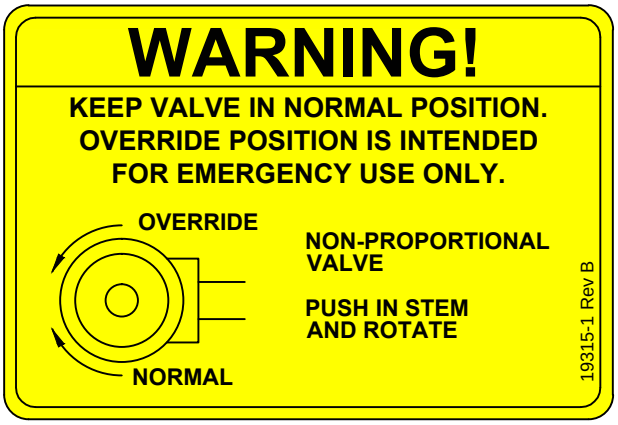


PART NO.: 19315-2

DECAL: MANUAL OVERRIDE (PROPORTIONAL)

FUNCTION: To show the operator how to override proportional valve.

QUANTITY: 1

PLACEMENT: Inside rear cover.

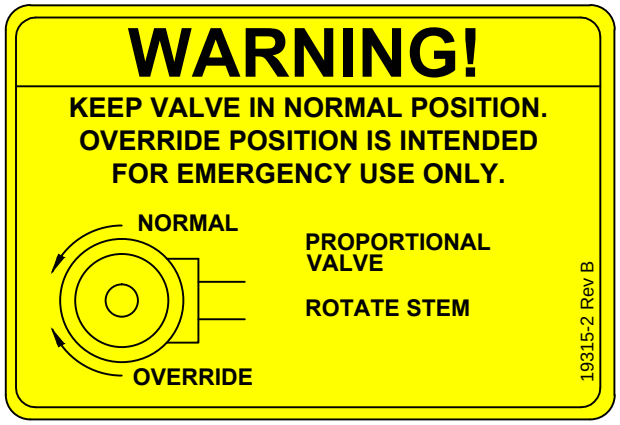


PART NO.: 20834

DECAL: MANUAL OVERRIDE NOTICE

FUNCTION: To inform the operator of manual override locations.

QUANTITY: 1

PLACEMENT: Inside rear cover.

PART NO.: 15390

DECAL: CAUTION - INSPECT VEHICLE & CRANE

FUNCTION: To inform the operator of key operating requirements.

QUANTITY: 1

PLACEMENT:Left side of rear cover.

PART NO.: 15391

DECAL: DANGER - NOT PASSENGER LIFT

FUNCTION: To inform the operator not to lift, support or transport personnel, and to ensure that crane operator is adequately trained.

QUANTITY: 1

PLACEMENT:Left side of rear cover.

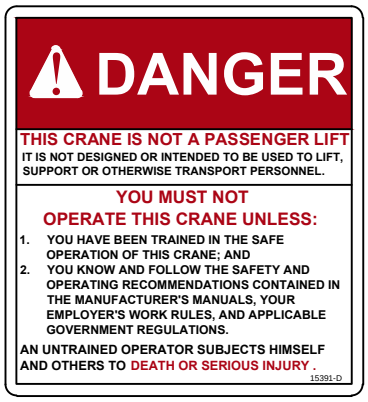


PART NO.: 15392

DECAL: DANGER - ELECTROCUTION HAZARD

FUNCTION: To inform the operator that the machine (crane) represents an electrocution hazard should it come too near or in contact with electrical voltage source.

QUANTITY: 1

PLACEMENT:Left side of rear cover.

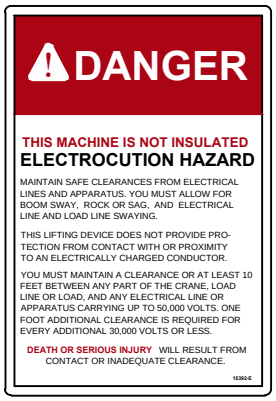


PART NO.: 22499

DECAL: KNOW YOUR SIGNALS

FUNCTION: To inform the operator of proper signals.

QUANTITY: 1

PLACEMENT:Right side of rear cover.

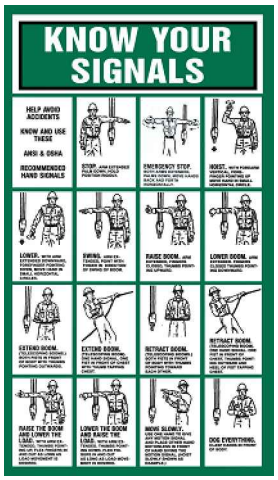


| | | | |
|---|---|---|---|
| VENTURO® VENCO VENTURO INDUSTRIES LLC CINCINNATI, OHIO | TITLE<br>DECAL DRAWING & LIST | DATE<br>11-30-22F | SECTION<br>C150 |
| | HT40/50/60/66 SERIES | SUPERSEDES<br>02-21-14E | 22181C |

PART NO.: 17389

DECAL: MEDIUM VENTURO

FUNCTION: Branding.

QUANTITY: 1

PLACEMENT: Rear cover.

PART NO.: 28705

DECAL: CRANE MODEL 12025H

FUNCTION: Branding.

QUANTITY: 2

PLACEMENT: Boom.

PART NO.: 28706

DECAL: CRANE MODEL 12030H

FUNCTION: Branding.

QUANTITY: 2

PLACEMENT: Boom.

PART NO.: 20927

DECAL: CRANE STABILITY

FUNCTION: To inform the operator of the crane's lifting capacity throughout the entire rotation.

QUANTITY: 1

PLACEMENT: In prominent location, so it is easily seen and readily identifiable.

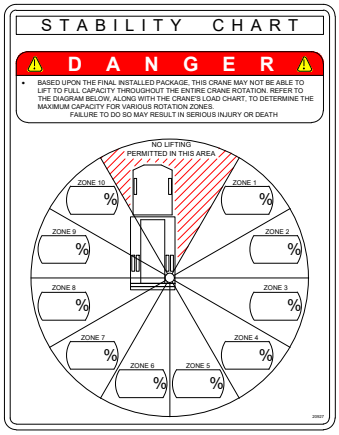


| | | | |
|---|---|---|---|
| VENTURO® VENCO VENTURO INDUSTRIES LLC CINCINNATI, OHIO | TITLE<br>DECAL DRAWING & LIST | DATE<br>10-01-25 | SECTION<br>C150 |
| | 12025H/12030H | SUPERSEDES<br>- | 28773 |

PART NO.: 28626L & 28626-R

DECAL: 12025H CRANE CAPACITY (VLC)

FUNCTION: To show the operator the operating capacities of the crane

QUANTITY: 1 each

PLACEMENT: Left side of boom, Right side of boom

LEFT SIDE OF BOOM

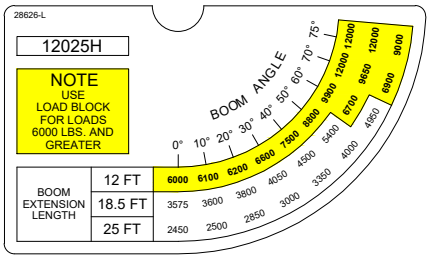


28626-L

RIGHT SIDE OF BOOM

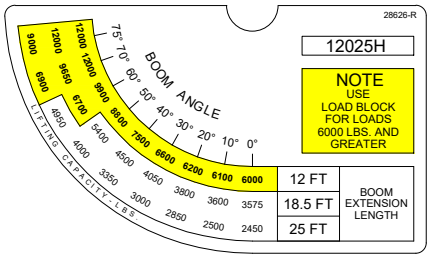


28626-R

PART NO.: 28625-L & 28625-R

DECAL: 12030H CRANE CAPACITY (VLC)

FUNCTION: To show the operator the operating capacities of the crane

QUANTITY: 1 each

PLACEMENT: Left side of boom, Right side of boom

LEFT SIDE OF BOOM

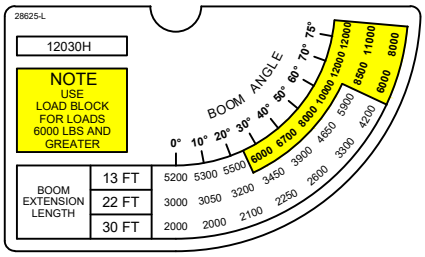


28625-L

RIGHT SIDE OF BOOM

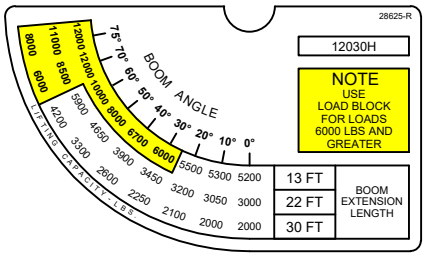


28625-R

S P A C E  I N T E N T I O N A L L Y  L E F T  B L A N K

S P A C E  I N T E N T I O N A L L Y  L E F T  B L A N K

▲

PART NO.: 23742

DECAL: VLC, 2.94" x 6.00"

FUNCTION: To show that the crane is equipped with Venturo Logic Controls

QUANTITY: 2 each

PLACEMENT: Each side of Housing

VENTURO LOGIC CONTROLS

▲

S P A C E  I N T E N T I O N A L L Y  L E F T  B L A N K

S P A C E  I N T E N T I O N A L L Y  L E F T  B L A N K

S P A C E  I N T E N T I O N A L L Y  L E F T  B L A N K

# SECTION 200

# INSTALLATION

VENCO VENTURO INDUSTRIES LLC
CINCINNATI, OHIO

7607200A

## BODY REINFORCEMENT

The truck body must be reinforced and outriggers provided to withstand the combined loads resulting from lifting and the weight of the crane and boom.

The maximum combined overturning moment for the 120**H is approximately 75,000 ft-lbs (includes moments induced by both lifted load and weight of the boom itself).

The maximum vertical load for the 12025H is 14,500 lbs and 12030H is 15,000 lbs.

## CRANE MOUNTING

The crane base plate or mounting pedestal must be bolted to the body reinforcing plate with four [4] grade eight (8) bolts of 1-1/8" diameter with coarse threads, torqued to 965 foot pounds.
A 6" - 10" diameter hose clearance hole must be cut in this plate to allow the hoses to swing and coil freely.

## ROTATION POSITIONING

The HT cranes are shipped with the boom rotated as shown on drawing 23532. It can be in any position that pleases the user since the boom can always reach the storage and travel position by rotating one way or the other.

## HYDRAULIC CONNECTIONS

The crane is furnished with pressure, return and case drain hoses that come down through the center of the housing. The pressure and return hoses connect to two hydraulic swivels to prevent damage while rotating the crane right and left.

**⚠ C A U T I O N ⚠**

- THE CASE DRAIN HOSE MUST BE A DEDICATED RETURN HOSE UNRESTRICTED TO TANK / RESERVOIR. DO NOT 'T' INTO ANOTHER EXISTING RETURN HOSE OR DAMAGE TO THE HYD. WINCH FROM BACK-PRESSURE WILL OCCUR. BACK-PRESSURE IN EXCESS OF 200 PSI WILL DAMAGE THE HYD. WINCH.

Arrange the pressure & return hoses in the compartment below the crane so that they are connected in a relaxed position while the crane is at the midpoint of the 400 degree rotation range -- regardless of the final position of the boom during storage/travel.

## ELECTRICAL CONNECTIONS

A 9 ft electrical power lead - intended for 12V DC only - comes down through the center of the crane base plate along with the hoses. This power lead should be slacked in the compartment so that it remains relaxed throughout the 400 degree rotation of the crane.

A 20 amp circuit breaker is mounted on the crane and protects the crane's internal wiring and solenoid coils. The 20 amp circuit breaker does not protect the 9 ft power lead. For added protection, the 9 ft lead can be connected to a 20 amp protected circuit that, if possible, is powered only when the vehicle engine is running.

## HYDRAULIC FLUID

| Average Climate | Type of Oil |
|---|---|
| Cold to Moderate | ISO Grade AW 46 |
| Warm to Hot | ISO Grade AW 68 |

The fluid should have the highest anti-wear characteristics and treated to inhibit rust and oxidation.

## HYDRAULIC HOSES & LINES

The minimum sizes for lines and hoses are as follows:

| HYDRAULIC LINE | HOSE INSIDE DIAMETER |
|---|---|
| PRESSURE | 5/8" |
| RETURN | 3/4" |
| SUCTION | 1-1/4" |

## RESERVOIR

The PTO reservoir should have a capacity of 40 gallons fitted with 100 mesh suction screen, 10 micron return line filter, and filler/breather cap.

## PTO PUMP

The PTO pump should be sized to allow an engine idle speed range that will deliver approximately 12 GPM. The crane's system relief pressure is set at 3000 psi.

## PTO START-UP

Before connecting the PTO system to the crane pressure and return hoses, connect the PTO pressure and return lines together at the bulkhead. Assuming 12 GPM with a 40 gallon reservoir, operate the PTO system for 20-25 minutes to flush out the lines and filter all fluid approximately seven times.

## ENGINE START/STOP & THROTTLE CONTROL

If your crane was purchased with optional engine start/stop and throttle control, refer to drawing 22615 in the replacement parts section for further information.

# 400° ROTATION STOP LOCATION

Crane is shipped in "CURBSIDE" mounting configuration.

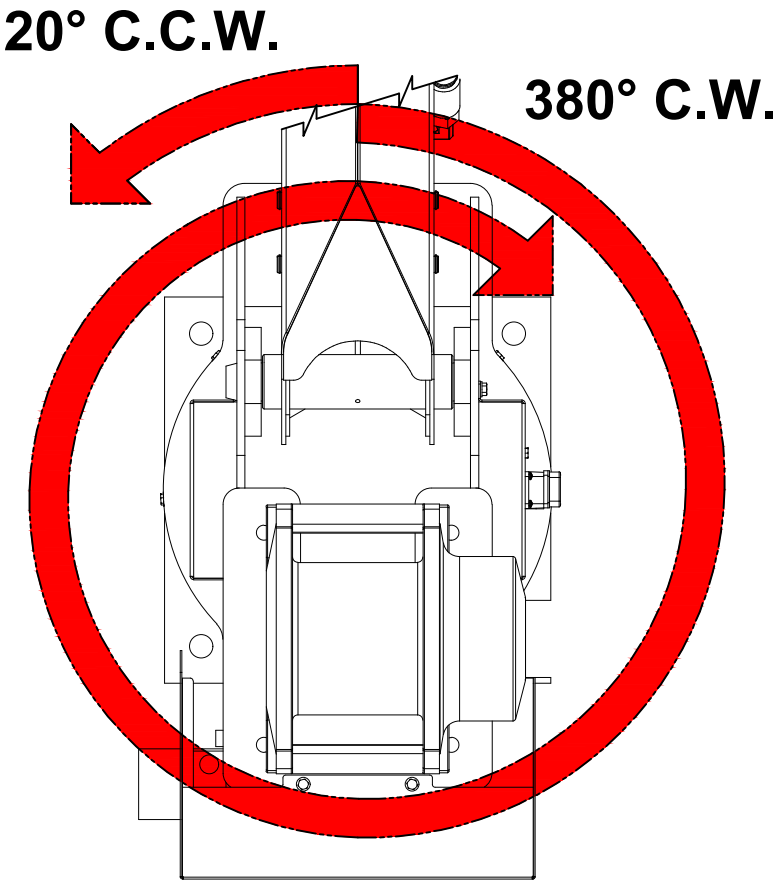


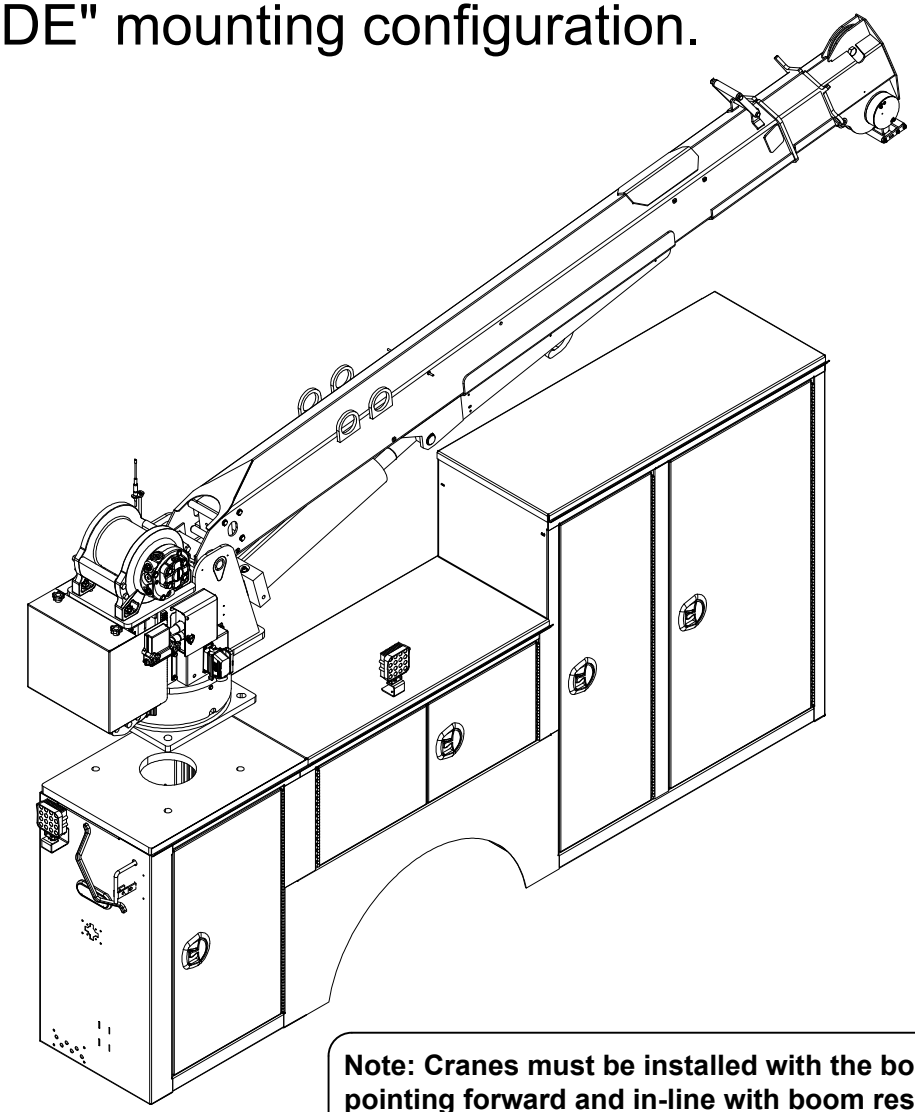

**Note: Cranes must be installed with the boom pointing forward and in-line with boom rest.**

***Contact Venturo Tech Support for assistance. 1-800-226-2238.***

# STABILITY TEST - 12025H

## Overview

Venturo follows the guidelines of ANSI B30.5 in defining stability. Generally speaking, a truck is considered stable as long as it is not on the verge of tipping - i.e. with the truck level, at least one tire on each corner of the truck must remain in contact with the ground.

It is important to note that nearly every installation is unique and will, therefore, typically require stability testing.

The procedure outlined below follows ANSI's (B30.5 - 5-1.1.1) specified "maximum load rating" of 85% of truck stability.

## Testing Procedure

1. Locate the truck on firm, level ground and set parking brake.

2. Fully deploy stabilizers, making sure they are firmly in contact with supportive ground; use stabilizer pads as required. The tires of the truck should remain in full contact with the ground.

3. Inspect wire rope and other key components of crane (consult owners manual for more information).

4. Conduct an operational check of all crane functions.

5. Use a ***test weight*** weighing a ***minimum*** of ***2882 lbs***, (includes load block weight of 67 lbs.) to a ***maximum of 3050 lbs***.

6. Place the VLC system into ***Stability Mode*** (reference VLC Manual)

7. Position the boom level and fully retracted

8. Referring to the Stability Chart (drawing 20907) rotate the crane to a position between 1 and 2 o'clock (truck cab is facing 12 o'clock) to begin testing.

9. Use the winch to lift the Test Weight; DO NOT allow the weight to be more than 6" off the ground at any time during testing (for safety).

10. Using the test weight, extend the boom slowly until one of three conditions occurs:
    - 10.1. Full extension is reached - Mark the ZONE in question **100%**
    - 10.2. The VLC system stops the boom extension - Mark the ZONE in question **100%**
    - 10.3. The truck becomes unstable i.e. a tire lifts off the ground
      - 10.3.1. Retract the boom until at least one tire on each corner of the truck is making contact with the ground
      - 10.3.2. Use the formula below to determine the allowable ***% of Rated Capacity*** for the ZONE in question:

11. Note: The ***Max Stable Reach in inches*** is measured from the ***center of rotation*** of the crane housing to the ***lifting load hook.***

$$\text{\% Rated Capacity} = \frac{\text{"Max Stable Reach" in inches}}{302} \times 100$$

12. Record the **% of Rated Capacity** in the appropriate blank (region) on the Crane Stability page (ref. 20907) and decal.

13. Repeat Steps 7 through 12 for each ZONE on the stability page.

# STABILITY TEST - 12030H

## Overview

Venturo follows the guidelines of ANSI B30.5 in defining stability. Generally speaking, a truck is considered stable as long as it is not on the verge of tipping - i.e. with the truck level, at least one tire on each corner of the truck must remain in contact with the ground.

It is important to note that nearly every installation is unique and will, therefore, typically require stability testing.

The procedure outlined below follows ANSI's (B30.5 - 5-1.1.1) specified "maximum load rating" of 85% of truck stability.

## Testing Procedure

1. Locate the truck on firm, level ground and set parking brake.

2. Fully deploy stabilizers, making sure they are firmly in contact with supportive ground; use stabilizer pads as required. The tires of the truck should remain in full contact with the ground.

3. Inspect wire rope and other key components of crane (consult owners manual for more information).

4. Conduct an operational check of all crane functions.

▲ 5. Use a ***test weight*** weighing a ***minimum*** of ***2367 lbs***, (includes load block weight of 67 lbs.) to a ***maximum of 2467 lbs***.

6. Place the VLC system into ***Stability Mode*** (reference VLC Manual)

7. Position the boom level and fully retracted

8. Referring to the Stability Chart (drawing 20907) rotate the crane to a position between 1 and 2 o'clock (truck cab is facing 12 o'clock) to begin testing.

9. Use the winch to lift the Test Weight; DO NOT allow the weight to be more than 6" off the ground at any time during testing (for safety).

10. Using the test weight, extend the boom slowly until one of three conditions occurs:
    - 10.1. Full extension is reached - Mark the ZONE in question **100%**
    - 10.2. The VLC system stops the boom extension - Mark the ZONE in question **100%**
    - 10.3. The truck becomes unstable i.e. a tire lifts off the ground
      - 10.3.1. Retract the boom until at least one tire on each corner of the truck is making contact with the ground
      - 10.3.2. Use the formula below to determine the allowable ***% of Rated Capacity*** for the ZONE in question:

11. Note: The ***Max Stable Reach in inches*** is measured from the ***center of rotation*** of the crane housing to the ***lifting load hook.***

$$\text{\% Rated Capacity} = \frac{\text{"Max Stable Reach" in inches}}{358} \times 100$$

12. Record the **% of Rated Capacity** in the appropriate blank (region) on the Crane Stability page (ref. 20907) and decal.

13. Repeat Steps 7 through 12 for each ZONE on the stability page.

# CRANE STABILITY

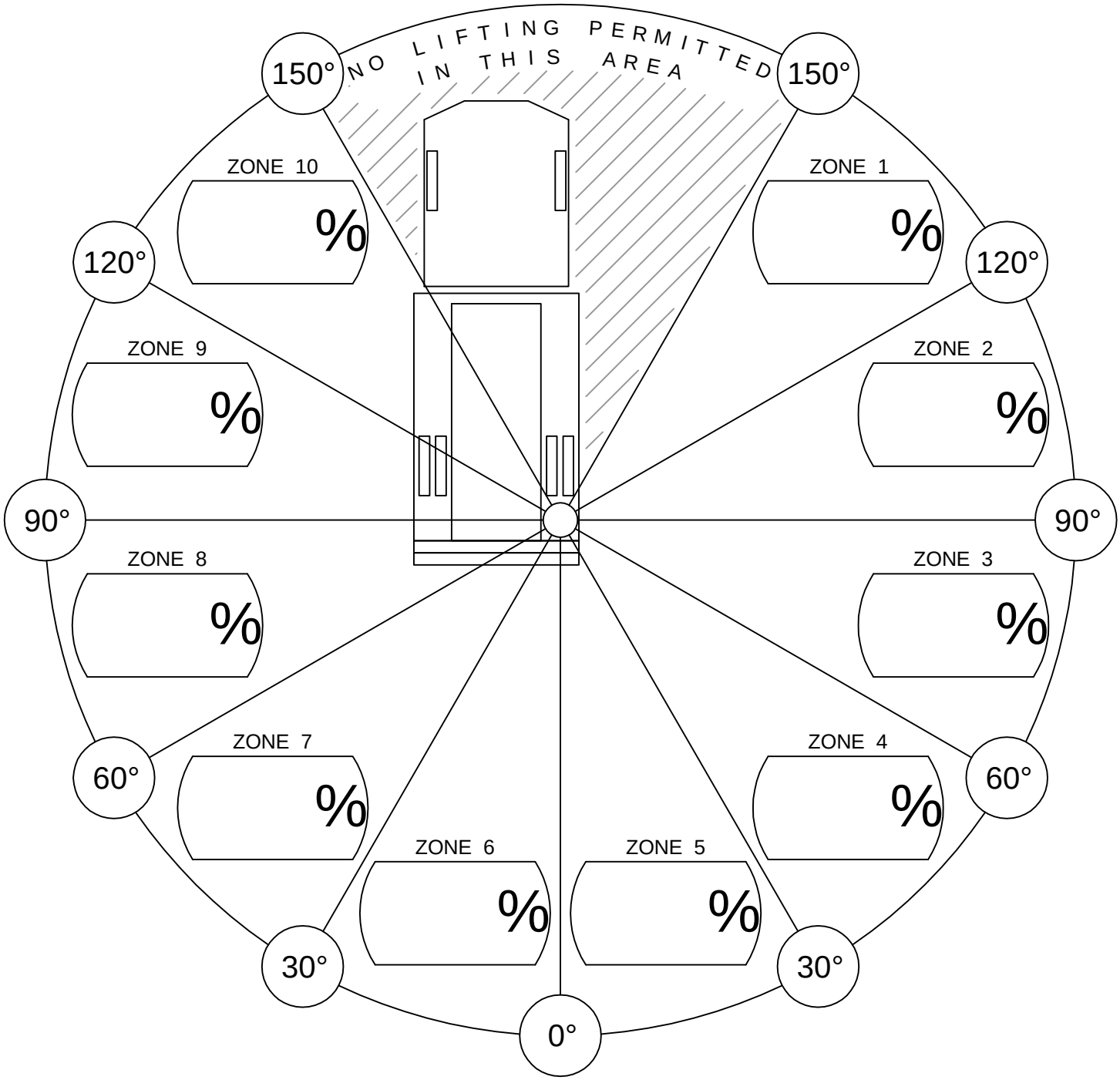


% of Rated Capacity for each of the 10 regions are provided above.

CONDITIONS:

- STABILIZERS FULLY EXTENDED & DOWN, ON FIRM LEVEL GROUND.

| | | | |
|---|---|---|---|
| VENTURO® VENCO VENTURO INDUSTRIES LLC CINCINNATI, OHIO | TITLE<br>STABILITY CHART | DATE<br>05-11-17F | SECTION<br>C200 |
| | VENTURO CRANES | SUPERSEDES<br>02-21-14E | 20907 |

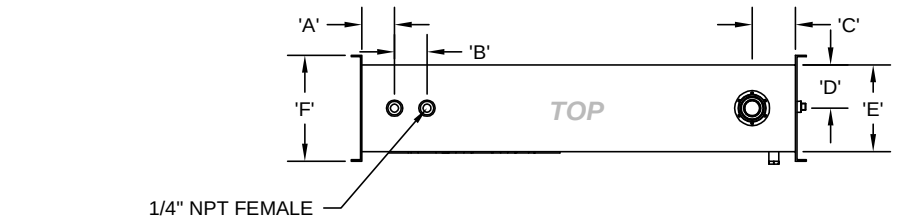


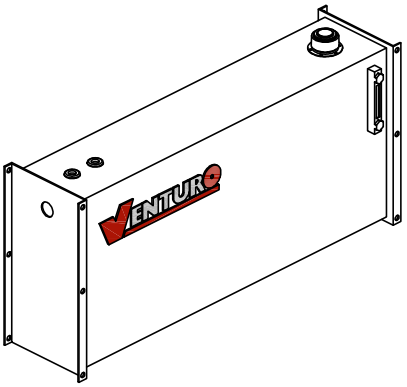

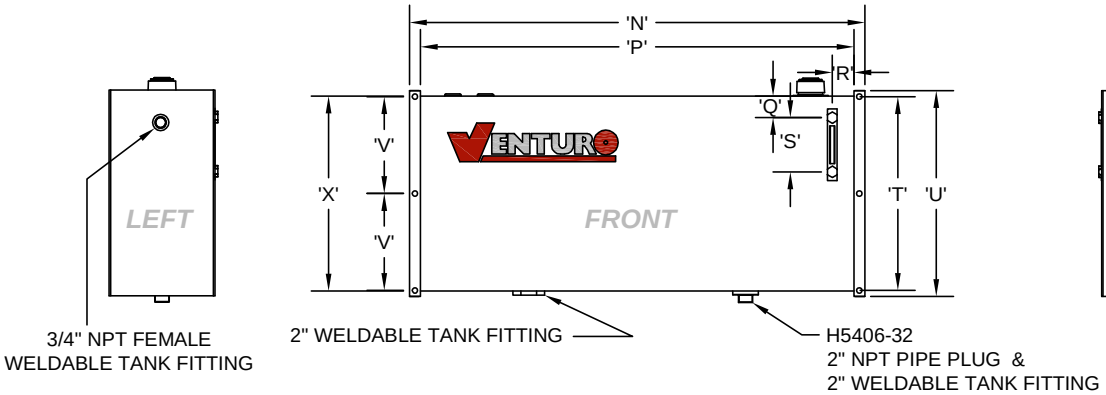


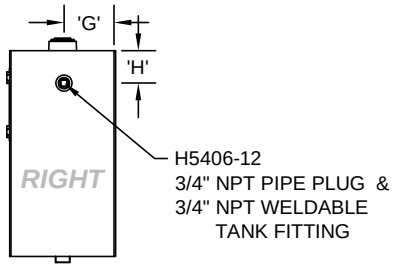


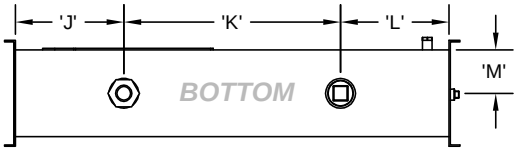


ILLUSTRATIONS FOR REFERENCE ONLY!
- COMPONENT LOCATIONS MAY DIFFER -

| HYD. TANK DIMENSION (HTD) CHART | | |
|---|---|---|
| DIMENSION / PART NO. | 22786 (25 GAL.) | 22999 (40 GAL.) |
| 'A' | 3" | 3" |
| 'B' | 3" | 3" |
| 'C' | 4" | 4" |
| 'D' | 4" | 5.5" |
| 'E' | 8" | 11" |
| 'J' | 5" | 6" |
| 'K' | 30" | 30" |
| 'L' | 5" | 6" |
| 'M' | 4" | 5.5" |
| 'P' | 40" | 42" |
| 'Q' | 2" | 2" |
| 'R' | 2" | 2" |
| 'S' | 5" | 5" |
| 'X' | 18" | 20" |

MEASUREMENTS EXCLUDE MOUNTING APARATUSES

| MOUNTING DIMENSION (*TMD*) CHART | | |
|---|---|---|
| DIMENSION / PART NO. | 22786 (25 GAL.) | 22999 (40 GAL.) |
| 'F' | 9.75" | 12" |
| 'G' | 4.875" | 6" |
| 'H' | 3" | 3" |
| 'N' | 42" | 44" |
| 'T' | 17.875" | 19.875" |
| 'U' | 19" | 21" |
| 'V' | 8.938" | 9.938" |

MEASUREMENTS INCLUDE MOUNTING APARATUSES

VENTURO®
VENCO VENTURO INDUSTRIES LLC
CINCINNATI, OHIO

| TITLE | DATE | SECTION |
|---|---|---|
| RESERVOIR DIMENSIONS | 02-21-14E | C200 |
| HYD. TANKS (25/40 GAL.) | SUPERSEDES 06-04-13D | 22825 |

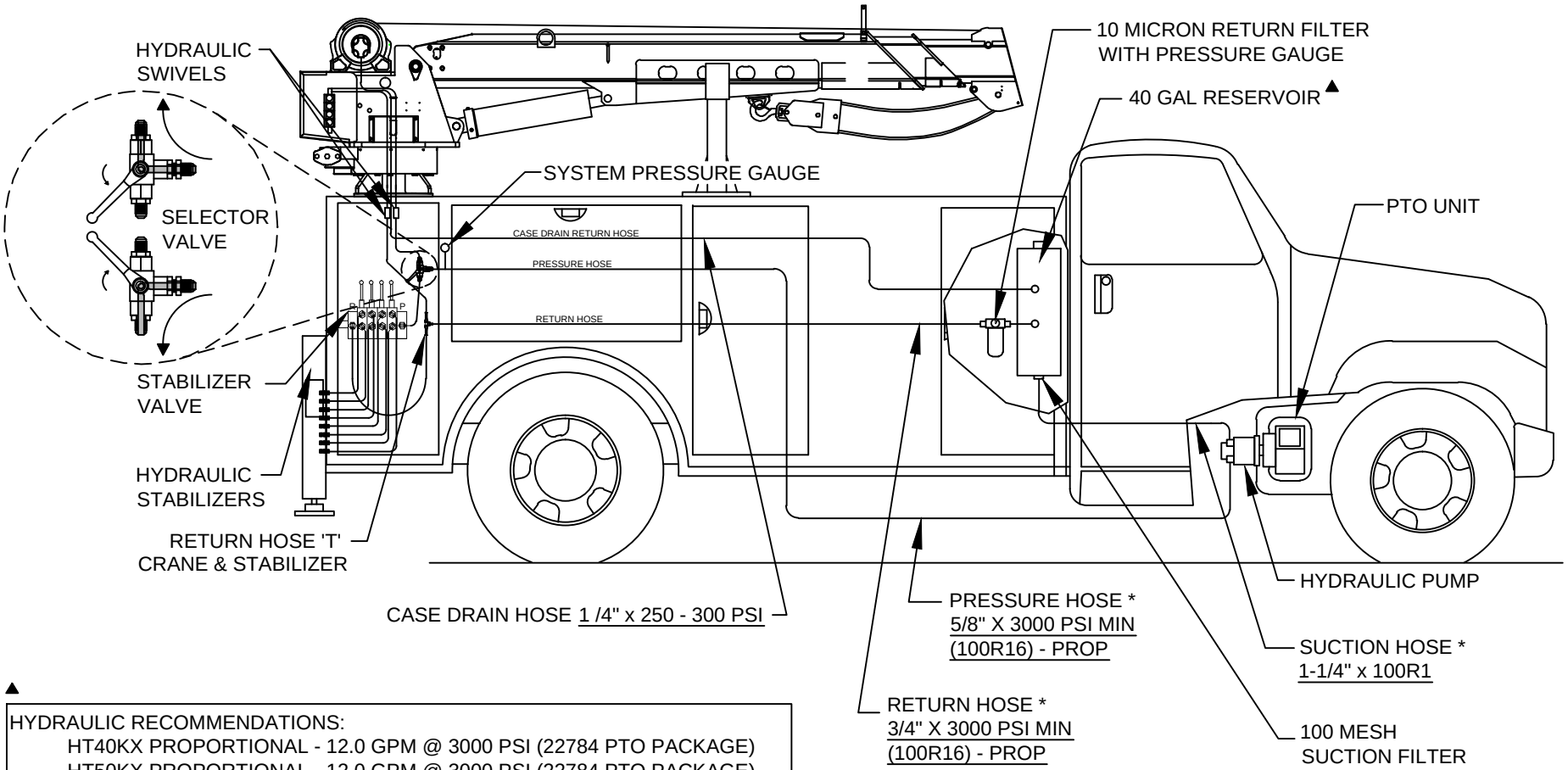


▲

HYDRAULIC RECOMMENDATIONS:

- HT40KX PROPORTIONAL - 12.0 GPM @ 3000 PSI (22784 PTO PACKAGE)
- HT50KX PROPORTIONAL - 12.0 GPM @ 3000 PSI (22784 PTO PACKAGE)
- HT45KX - 12.0 GPM @ 3000 PSI (22998 PTO PACKAGE)
- HT55KX - 12.0 GPM @ 3000 PSI (22998 PTO PACKAGE)
- HT60KX - 12.0 GPM @ 3000 PSI (22998 PTO PACKAGE)
- HT66KX - 12.0 GPM @ 3000 PSI (22998 PTO PACKAGE)

## ⚠ CAUTION

- SELECTOR VALVE MUST BE 'NON-CLOSED CENTER TRANSITION' TYPE.

REFER TO SECTION 200 FOR MORE INFORMATION ON INSTALLING HYDRAULIC COMPONENTS.

* HOSES AND FITTINGS BETWEEN PUMP, RESERVOIR, AND CRANE *NOT INCLUDED*.

## ⚠ CAUTION

- THE CASE DRAIN LINE FROM THE WINCH MUST HAVE AN UNRESTRICTED PATH TO TANK/ RESERVOIR.

# HYDRAULIC CIRCUIT CONNECTION GUIDE - SINGLE PUMP (NO COMPRESSOR)
(REFER TO SECTION 200 FOR MORE INFORMATION, INCLUDING HOSE SPECIFICATIONS)

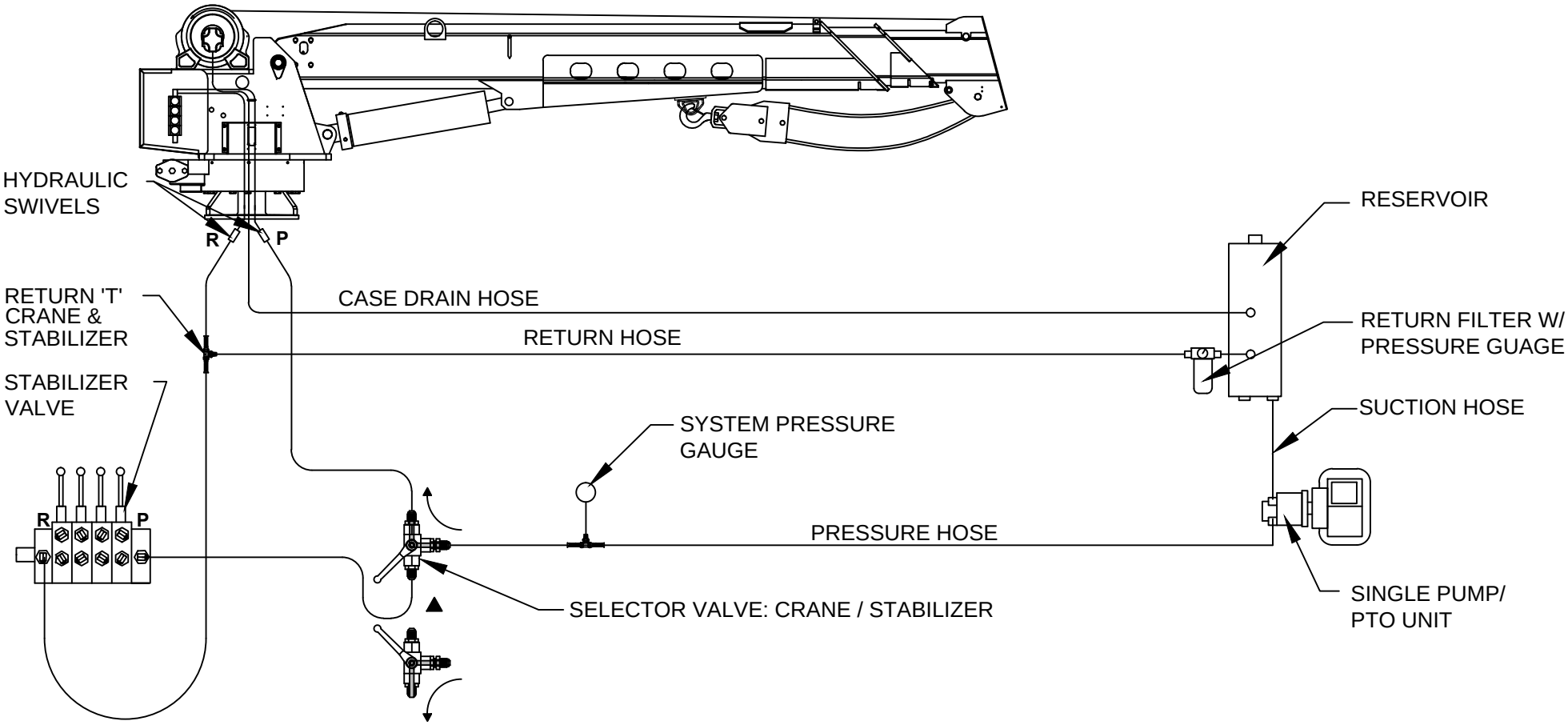


## ⚠ CAUTION

- SELECTOR VALVE MUST BE 'NON-CLOSED CENTER TRANSITION' TYPE.

## ⚠ CAUTION

- THE CASE DRAIN LINE FROM THE WINCH MUST HAVE AN UNRESTRICTED PATH TO TANK/ RESERVOIR.

## HYDRAULIC CIRCUIT CONNECTION GUIDE - SINGLE PUMP W/ COMPRESSOR

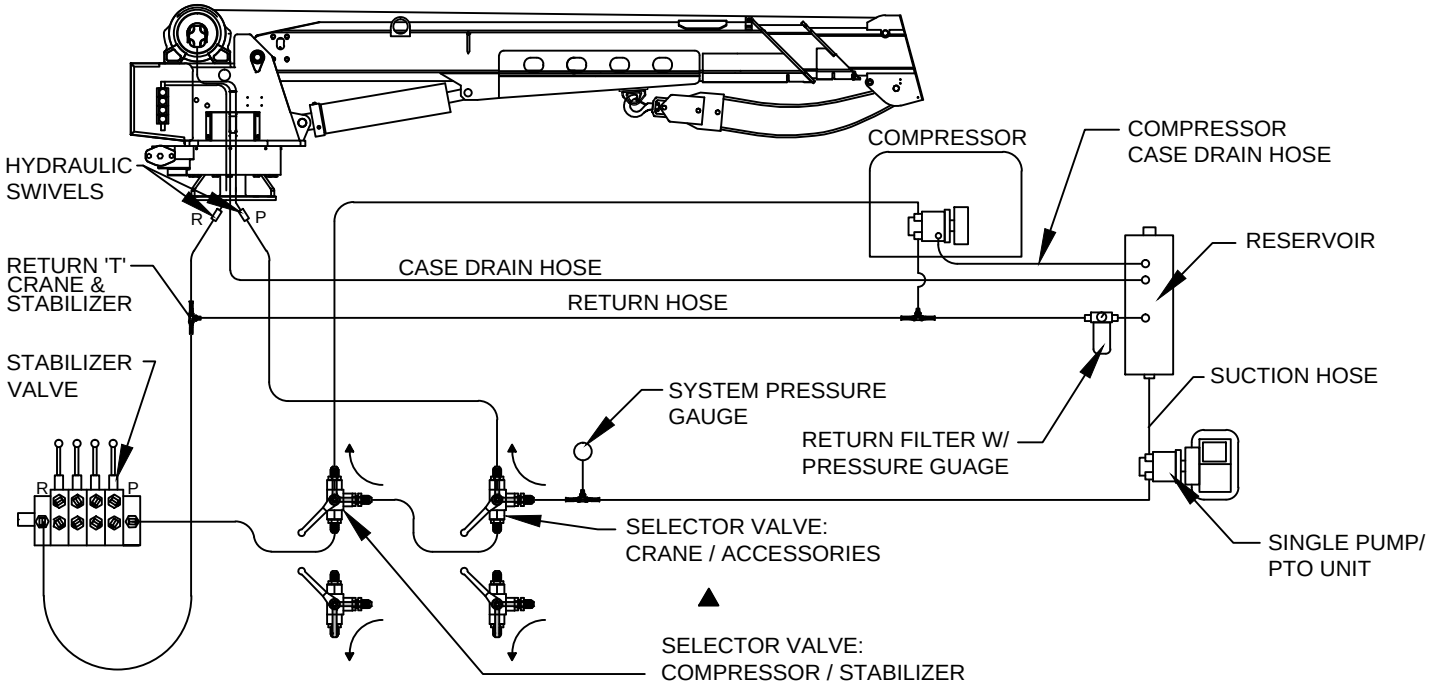


## HYDRAULIC CIRCUIT CONNECTION GUIDE - TWO-STAGE PUMP W/ COMPRESSOR

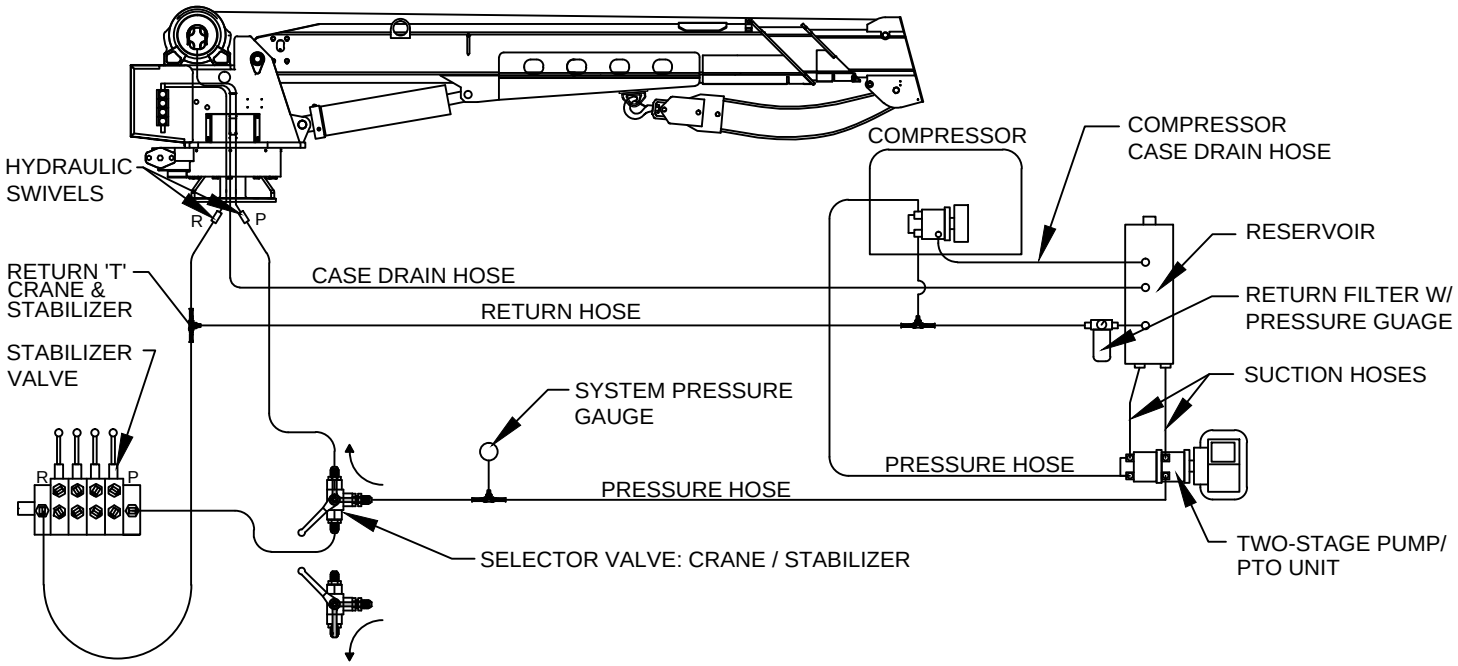


**CAUTION**

- SELECTOR VALVE MUST BE 'NON-CLOSED CENTER TRANSITION' TYPE.

REFER TO SECTION 200 FOR MORE INFORMATION, INCLUDING HOSE SPECIFICATIONS

**CAUTION**

- THE CASE DRAIN LINE FROM THE WINCH MUST HAVE AN UNRESTRICTED PATH TO TANK/ RESERVOIR.

# RECOMMENDED SUPPLY & RETURN HOSE CONNECTIONS
# CRANE & STABILIZERS

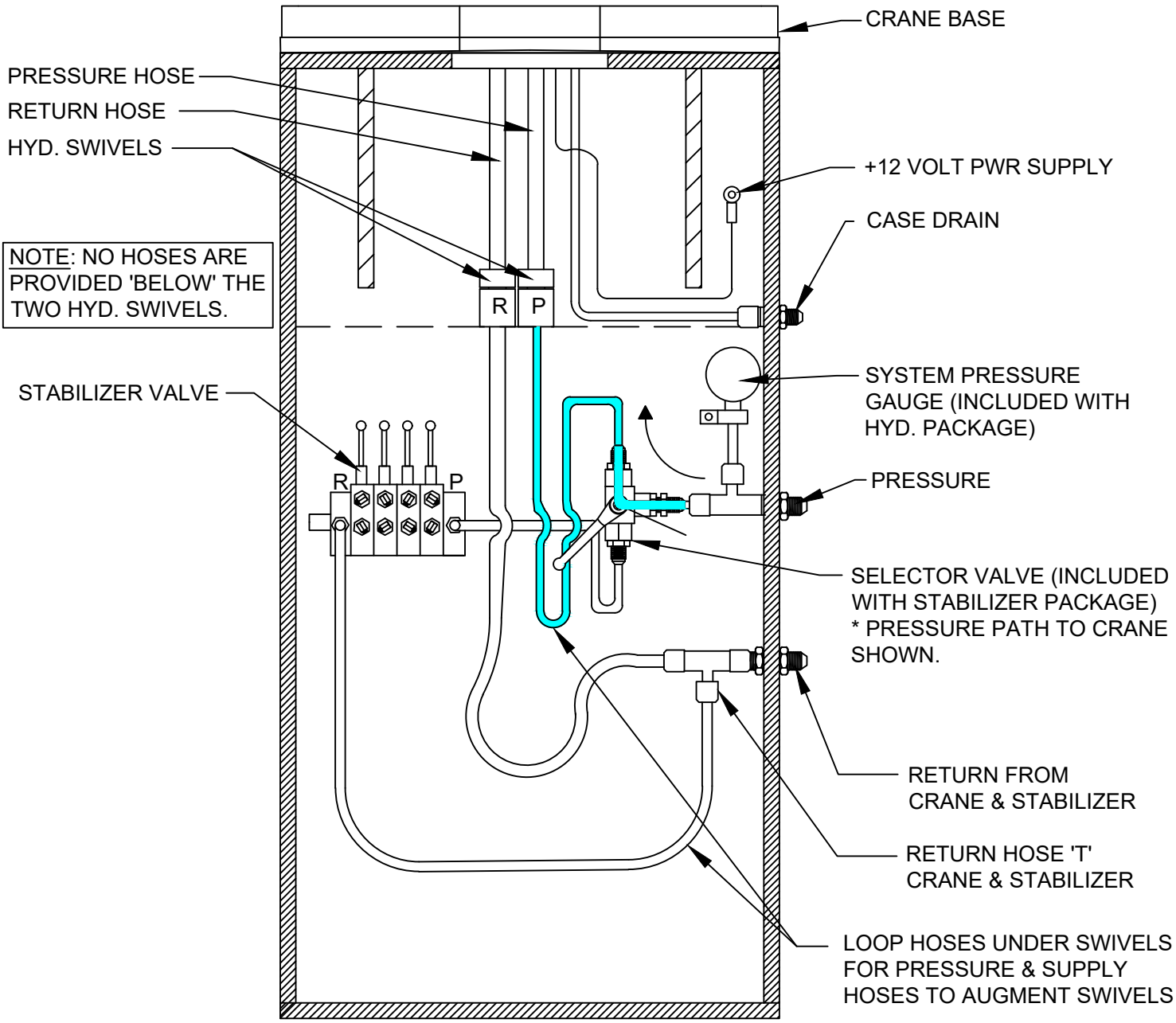


## ⚠ CAUTION

- SELECTOR VALVE MUST BE 'NON-CLOSED CENTER TRANSITION' TYPE VALVE.

## ⚠ CAUTION

- CASE DRAIN MUST RETURN DIRECTLY TO RESERVOIR WITHOUT RESTRICTION.

# WIRE ROPE INSTALLATION

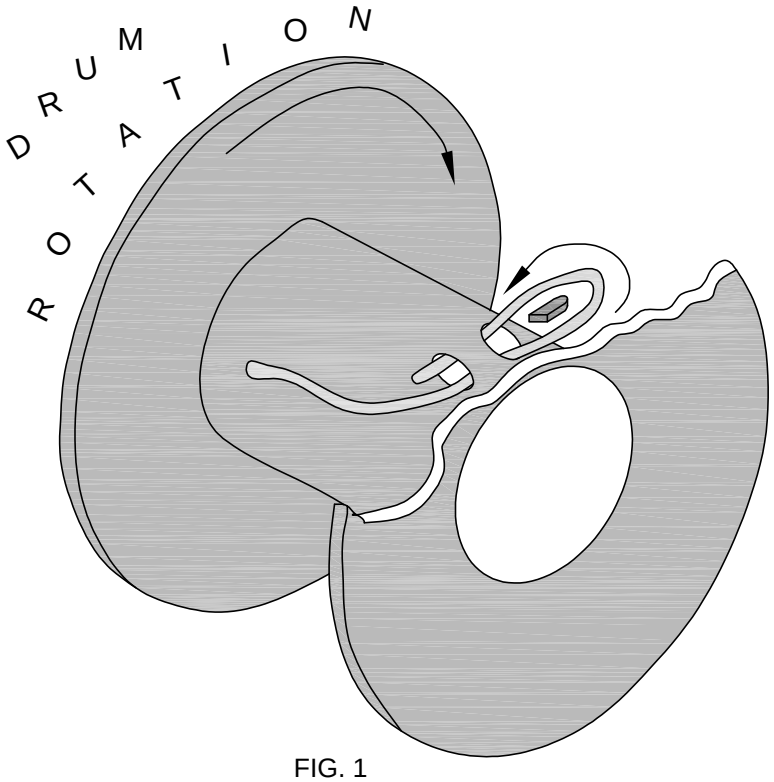


FIG. 1

STEP 1: UNWIND COIL OF WIRE ROPE BY 'ROLLING' ALONG THE FLOOR. THIS WILL PREVENT 'KINKING'.

STEP 2: INSERT WIRE ROPE END UP THROUGH ANTI-2-BLOCK (A2B) CAGE ASSEMBLY, BETWEEN CHEEK PLATES, OVER THE TOP SHEAVE, AND THROUGH WIRE ROPE GUIDE.

STEP 3: INSERT WIRE ROPE END INTO POCKET OPENING ON WINCH, WRAP AROUND WEDGE, AND BACK THROUGH POCKET OPENING AS SHOWN IN FIGURE 1.

**⚠ CAUTION**

- IF THE WIRE ROPE IS NOT INSTALLED FOR THE CORRECT DRUM ROTATION, THE WINCH BRAKE VALVE WILL NOT HOLD THE LOAD.

**⚠ CAUTION**

- THERE MUST ALWAYS BE AT LEAST [5] DEAD WRAPS OF WIRE ROPE ON THE WINCH DRUM WHILE UNDER LOAD.

NOTE: SOME WINCHES MAY BE SUPPLIED WITH A HEX NUT IN LIEU OF A WEDGE FOR INSTALLING THE WIRE ROPE.

# SECTION 300

# OPERATION

# &

# MAINTENANCE

VENCO VENTURO INDUSTRIES LLC
CINCINNATI, OHIO

# MAINTENANCE OVERVIEW INFORMATION

## MAINTENANCE

The crane requires only periodic lubrication.  As a standard procedure, this can be done at the time the vehicle is serviced.

## GENERAL

Inspect wire rope for any evidence of kinks or fraying.  Ensure that lifting hook of wire rope shows no evidence of damage and is functioning normally.

Inspect headache ball ("load block") for any signs of damage or excessive wear.

Service all grease fitting locations.

Inspect hydraulic hoses and hydraulic fittings for hydraulic leaks.

Inspect electrical connections for any looseness or corrosion.

Inspect bolts and verify all are tight, paying particular attention to winch, rotation system, and mounting base bolts.

Inspect all pins and snap rings for proper fit and function.

Inspect sheaves for excessive wear or play.

Perform a basic inspection of the winch with each use, monitoring for unusual noise or hydraulic leaks.

# CRANE OPERATION AND MAINTENANCE INSTRUCTIONS ▲

## SAFETY

Before operating this crane, read and understand these instructions, the 920612 Crane Safety and Hazards Information Sheet, and review all safety & instruction labels on the crane.

## CRANE INSPECTION

Before operating this crane, inspect for wear, damage, or oil leakage. After the wire rope has been run out, check for wear, kinks, and broken strands. Check the hook and safety latch for damage. Correct any problems before using the crane.

***See Crane Safety Manual for proper inspection schedules and reports*** .

## CAPACITY

Before operating this crane, review the capacity charts on the sides of the boom to relate the load to be lifted to the boom length and angle. The boom angle is shown by a gravity arrow.

## LOAD BLOCK ▲

If the load exceeds the single-line rated load or if reduced winching speed for better control of smaller loads is required, use the load block to rig the crane for two part line operation.

## CONTROLS ▲

The control pendant should be stored in a compartment or the cab when the crane is not in use.

Before activating the control pendant, inspect the cord(s) and pendant head/switches for damage. With the pendant OFF and the PTO disengaged, actuate all switches in both directions to verify that they all have the same feel/sound and return to the center position.

## PTO SYSTEM ▲

Check the hydraulic fluid level in the PTO system reservoir. Engage PTO and set the engine speed to provide the desired hydraulic flow rate per the PTO system instructions.

## CRANE OPERATION

Use "Winch Down" to release tension on the wire rope to unhook it from the storage tie down position.

Use "Boom Up" to elevate the boom from the boom rest position.

Avoid repeated rapid reversals of the control switches. This can cause the load to swing.

Check all control functions to see that they are working as described in the following section.

## CONTROL FUNCTIONS

- WINCH "UP" and "DOWN" - Raises and lowers the load with the winch.
- BOOM "UP" and "DOWN" - Raises and lowers the boom elevation angle.
- BOOM "OUT" and "IN" - Extends and retracts the boom.
- ROTATION "L" and "R" - Controls the left and right direction of the crane rotation.
- TRIGGER - Varies the flow rate delivered to the crane valve. The farther the trigger is pulled, the faster the selected crane function operates.

## CRANE OPERATION (with VLC TRANSMITTER)▲

- Turn master crane power ON.
- Disengage the E-STOP.
- Actuate the HORN toggle switch.
- Select the crane function toggle switch to be actuated.
- Pull the proportional trigger to control the speed of the selected crane function.
- NOTE: For safety reasons, the crane function toggle switch must be selected *before* pulling the proportional trigger or the crane will not operate.

## VLC OVERLOAD SENSING SYSTEM

This crane is equipped with the Venturo Logic Control (VLC) overload sensing system. If the capacity of the crane is exceeded, the "Winch Up", "Boom Down", and "Boom Out" functions will be shut down. The "Winch Down", "Boom Up", and "Boom In" functions will continue to operate and can be used to relieve the overload condition. The "Rotation" function also will continue to operate.

## TWO-BLOCK SENSING SYSTEM

This crane is equipped with an anti two-block device that is mounted at the tip of the boom. If the load block / overhaul weight contacts the device the "Winch Up", "Boom Down", and "Boom Out" functions are disabled. The "Winch Down", "Boom Up", and "Boom In" functions will continue to operate and can be used to relieve the two-block condition.

## TRUCK SETUP & STABILIZERS

1. The truck should be parked on firm level ground.
2. The center of the crane should be positioned close enough to the job so that it can be operated at a reach that puts the load within the rated capacity of the crane.
3. Set the vehicle parking brake and put the vehicle transmission in "park" if it is an automatic.
4. Fully deploy stabilizers to help stabilize vehicle against rocking or overturning.
5. Use stabilizers to level vehicle only. Tires must maintain contact with ground.

## PREPARATION FOR TRAVEL

1. Return the stabilizers to the stowed position. Install and secure all pins.
2. Stow the crane boom in the boom support.
3. Hook the winch line to a tie down point on the body or pedestal and apply tension.
4. Disengage the PTO pump and idle speed control.
5. Power down the control pendant and store in a body compartment or the cab.
6. Turn OFF power to crane.

## MAINTENANCE - MODEL-SPECIFIC INFORMATION

The winch planetary gearbox lube should be maintained at the level plug.

To ensure optimal winch performance, the following lube schedule and lube specifications should be followed:

Initial Change - after 6 months or 100 hours of operation (whichever comes first).
Periodic Change - every 24 months or 300 hours of operation (whichever comes first).

HLP 46 or HLP 68 hydraulic oil

Service grease fittings and rotation gear with molybdenum-disulfide graphite-filled lithium-based extreme pressure grease.

Grease fitting locations:
Boom pivot at rear of boom
Slew drive (2 zerk fittings)
Swing bearing race (1 zerk fitting)
Elevation cylinder base and rod pivots

# EXPLANATION OF HYDRAULIC VALVE SYSTEMS

## OVERVIEW

Venturo's hydraulic cranes are available in two [2] general configurations: Proportional and Non-Proportional. The **Non-Proportional** configuration utilizes a safety shut-off valve which, when ***not*** actuated, allows hydraulic fluid to bypass the valve bank and return to tank; the crane will not function when the safety shut-off valve is not actuated. When the safety shut-off valve is actuated (control pendant energizes the coil or the coil is manually overridden), hydraulic fluid cycles through the valve bank and allows the crane to function. The **Proportional** configuration utilizes a proportional valve which, in its fully closed and fully opened positions, functions similarly to the safety shut-off valve, but adds the ability to operate the crane at any speed in between these two extremes.

In both the Non-Proportional and Proportional configurations, the four [4] crane functions (winch, rotation, boom elevation, and boom extension) are controlled by four [4] separate valve sections. Each valve section has two [2] solenoid coils (and two [2] manual overrides) which control the direction that the function operates (e.g. winch up vs. winch down). For a given crane function and direction (e.g. winch up), the solenoid coil and the associated manual override lie on the same side of the valve bank (both 'push').

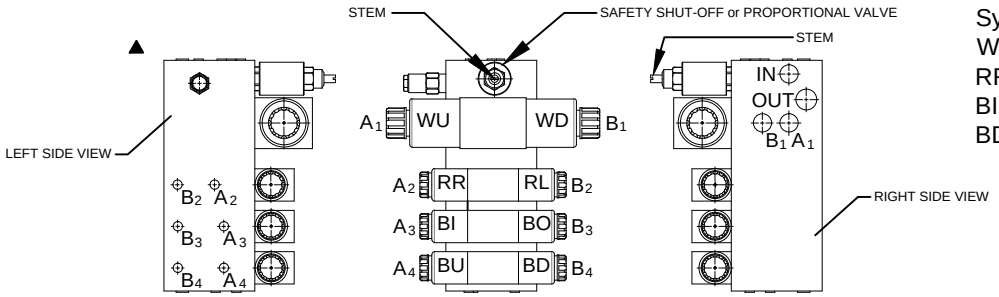


System abbreviations:

| | | | |
|---|---|---|---|
| WD | - Winch Down | WU | - Winch Up |
| RR | - Rotation Right | RL | - Rotation Left |
| BI | - Boom In | BO | - Boom Out |
| BD | - Boom Down | BU | - Boom Up |

## MANUAL OVERRIDE SYSTEM

Should an electrical failure occur, your Venturo crane can be operated manually. ***The manual overrides are intended for emergency use only and should not be used for normal operation***.

**To operate in manual override mode**:

(1) Override the safety shut-off or proportional valve by turning the red stem on the valve as stated below:

Non-Proportional system

For override operation, press stem in and rotate counter-clockwise until it stops.
To return to normal operation, press stem in and rotate clockwise until it stops.

Proportional system

For override operation, rotate stem clockwise (the farther the stem turns, the faster the crane operates).
To return to normal operation, roate stem counter-clockwise until it stops.

(2) Determine the coil / override associated with the function you wish to operate, then insert a small diameter object (an Allen wrench works well) into the detent on the end of the valve stem and press firmly. For example, pushing the stem labeled 'A1' on the first bank (see illustration above) will actuate Winch Up.

## W A R N I N G

- For normal crane operation, the safety shut-off or proportional valve ***MUST*** be in the 'normal' position (as described above). Test the crane before each use by placing the power toggle switch or trigger in the 'OFF' position and testing each crane function *using the manual overrides*. If any crane function operates, verify that the red stem on the safety shut-off or proportional valve is in the normal position, then retest.

## ONE-PART (SINGLE) LINE CONFIGURATION

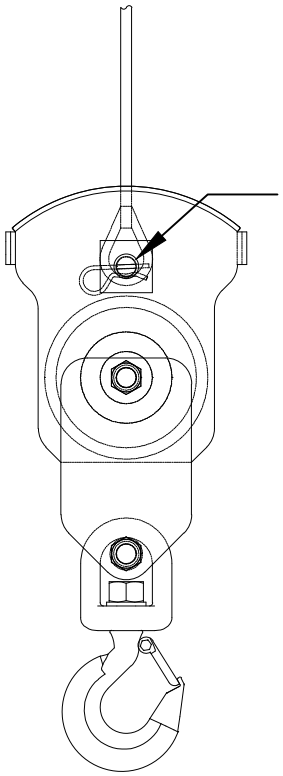

(1) Insert wire rope between load block plates

(2) Place clevis pin through both holes of load block and end of wire rope

(3) Secure clevis pin using hairpin cotter pin

Note: The same clevis pin is used to attach end of wire rope to load block for one-part line configuration and to boom head for two-part line configuration

## TWO-PART (DOUBLE) LINE CONFIGURATION

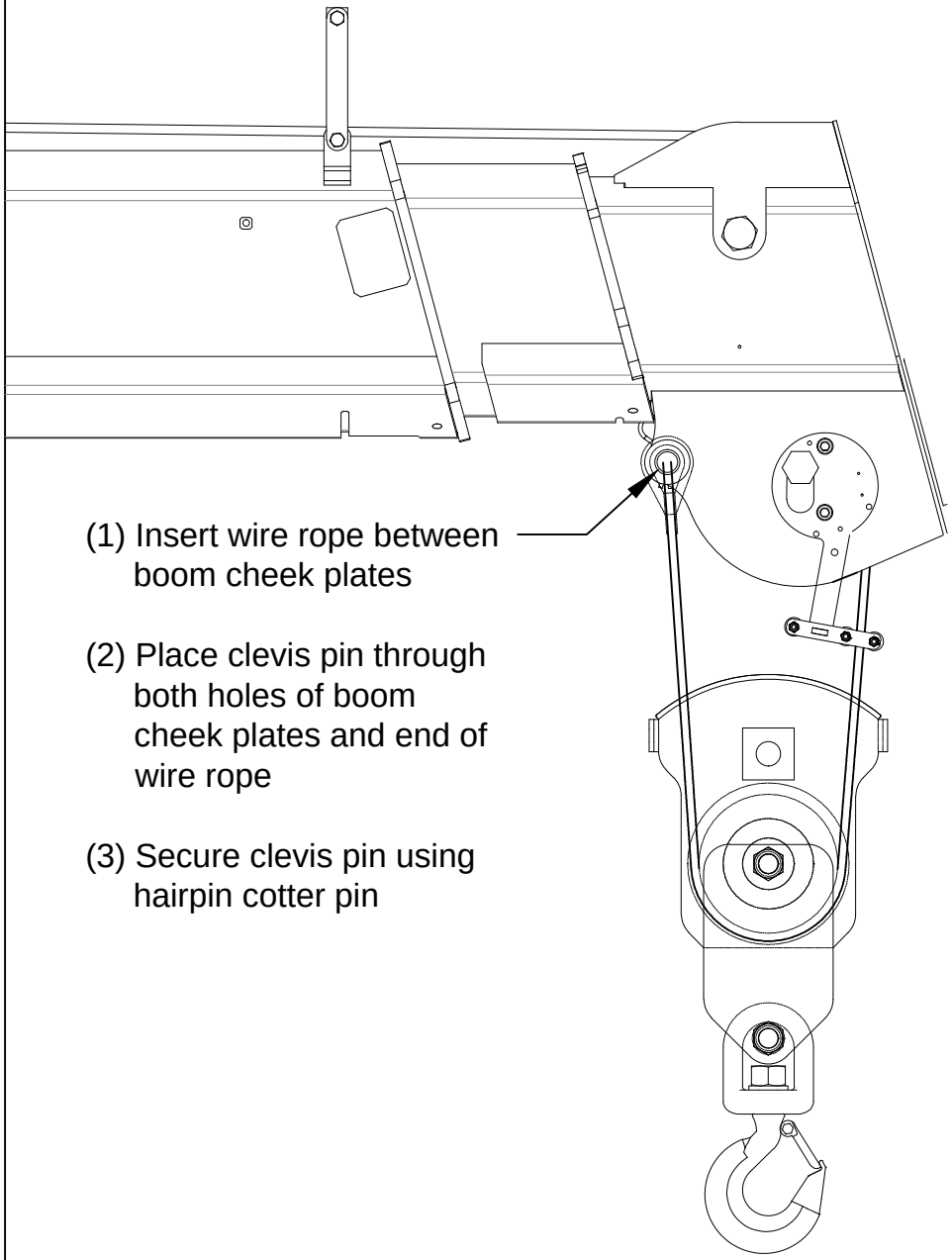

(1) Insert wire rope between boom cheek plates

(2) Place clevis pin through both holes of boom cheek plates and end of wire rope

(3) Secure clevis pin using hairpin cotter pin

VENTURO®

VENCO VENTURO INDUSTRIES LLC
CINCINNATI, OHIO

| TITLE | DATE | SECTION |
|---|---|---|
| ONE-PART AND TWO-PART LINE CONFIG | 08-21-25 | C300 |
| CRANES WITH NON-HOOK WIREROPE | SUPERSEDES<br>- | 28464 |

# SECTION 400

# REPLACEMENT PARTS

VENCO VENTURO INDUSTRIES LLC
CINCINNATI, OHIO

7607400A

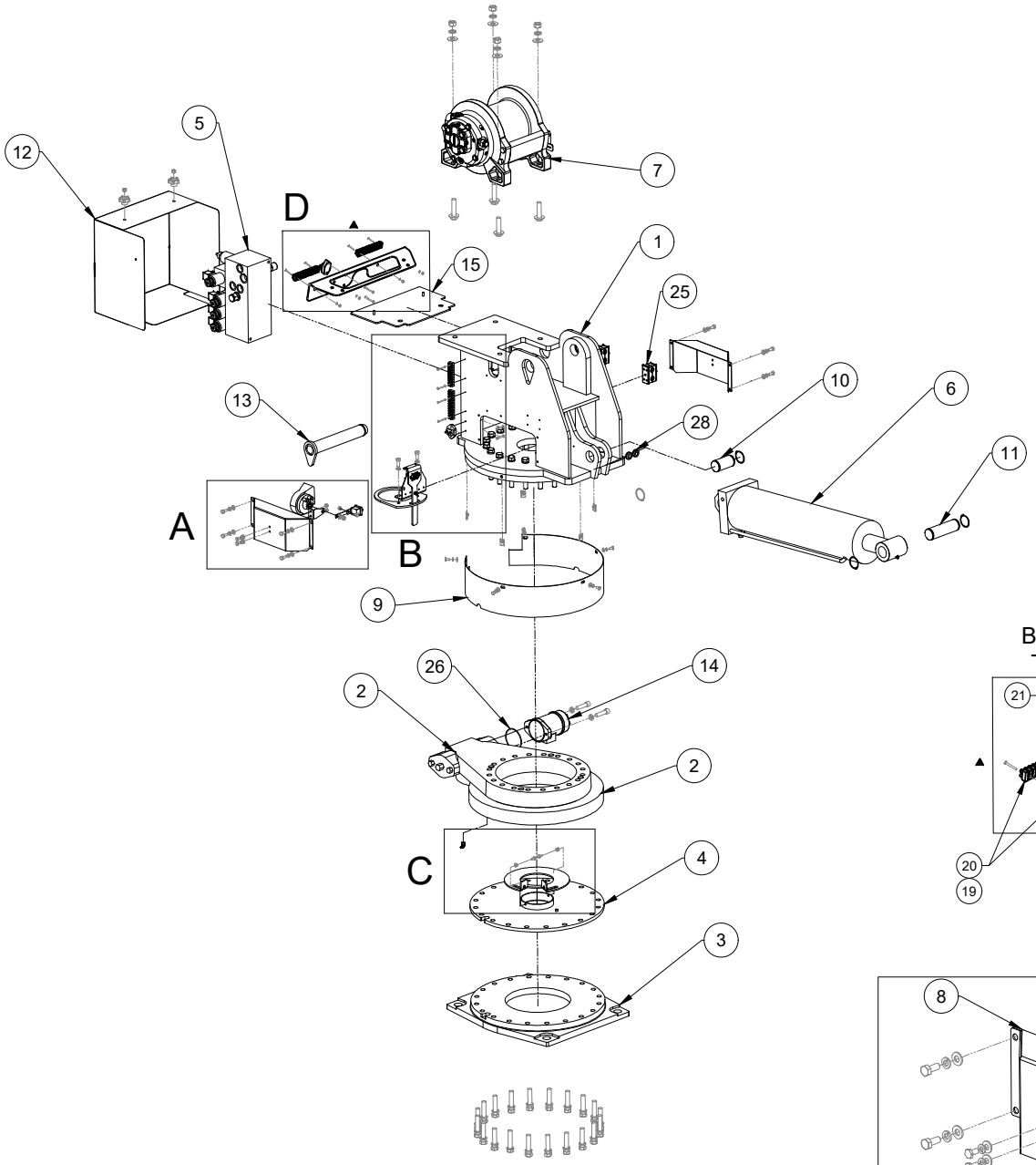


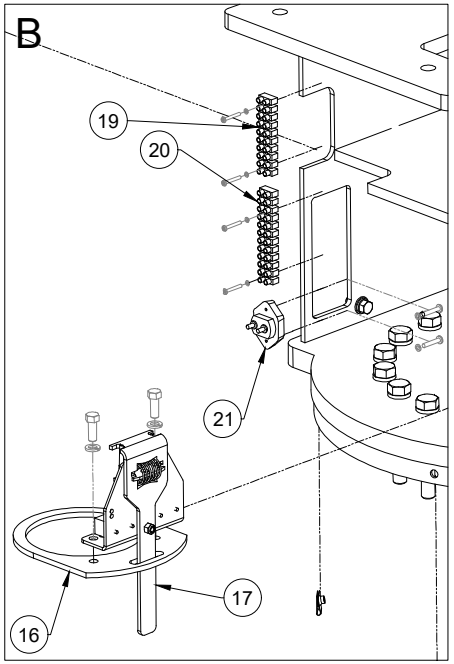


BRACKET MOUNTED
TERMINAL STRIPS

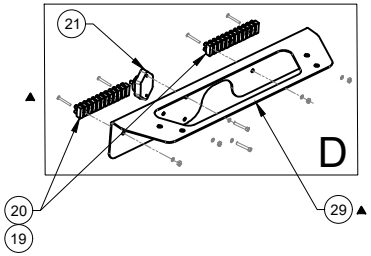


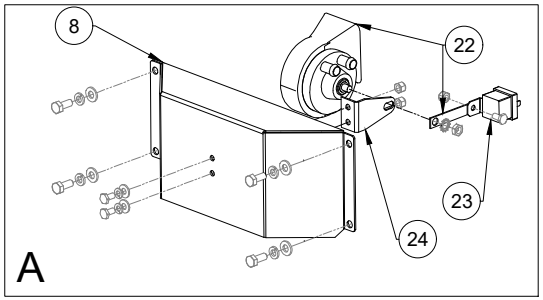


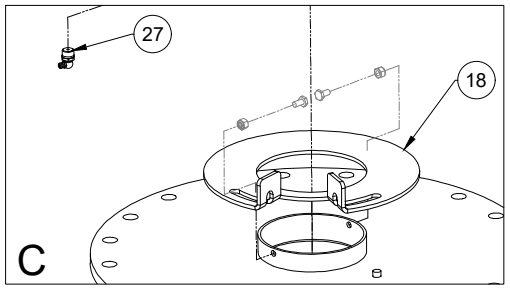


REFERENCE 28612 FOR REPLACEMENT PARTS LIST

VENTURO®

VENCO VENTURO INDUSTRIES LLC
CINCINNATI, OHIO

| TITLE | DATE | SECTION |
|---|---|---|
| REPLACMENT PARTS DRWNG - MECHANISM | 10-19-26A | C400 |
| 12025H/12030H | SUPERSEDES 08-21-25 | 28611 |

# REPLACEMENT PARTS LIST - 12025H/12030H; MECHANISM

| ITEM | QTY. | PART NUMBER | DESCRIPTION |
|---|---|---|---|
| 1 | 1 | 24930 | WELDED ASSEMBLY; HOUSING, MECHANISM |
| 2 | 1 | 27275 | SLEWING RING |
| 3 | 1 | 28470 | MACHINED BASE |
| 4 | 1 | 28473 | SLIPPER PLATE WELD |
| 5 | 1 | 22736H-1 | VAVLE MANIFOLD; HI FLOW, 3000 PSI |
| 6 | 1 | 21750 | 6 X 20.125 CYLINDER |
| 7 | 1 | 27274 | HYDRAULIC WINCH |
| 8 | 2 | 27400 | HOUSING SIDE COVER |
| 9 | 1 | 27406 | SLEWING RING COVER |
| 10 | 1 | 27502 | ELEVATION CYLINDER PIN - INBOARD |
| 11 | 1 | 27503 | ELEVATION CYLINDER PIN - OUTBOARD |
| 12 | 1 | 27505 | REAR COVER |
| 13 | 1 | 22721 | PIVOT PIN - MAIN BOOM PIVOT |
| 14 | 1 | 27276 | HYDRAULIC ROTATION MOTOR |
| 15 | 1 | 28318 | REAR COVER MOUNTING PLATE |
| 16 | 1 | 23680 | HOUSING WATER DAM |
| 17 | 1 | 28474 | ELECTRIC ROTATION STOP ASSEMBLY |
| 18 | 1 | 23666 | STOP DISK - ELECTRIC ROTATION STOP |
| 19 | 1 | 19187-10 | TERMINAL STRIP; 10 SECTIONS |
| 20 | 1 | 19187-12 | TERMINAL STRIP |

| ITEM | QTY. | PART NUMBER | DESCRIPTION |
|---|---|---|---|
| 21 | 1 | 15683-20A | CIRCUIT BREAKER; 20A |
| 22 | 1 | 21948 | HORN |
| 23 | 1 | 22739 | HIGH CAPACITY RELAY |
| 24 | 1 | 22000 | BRACKET; HORN |
| 25 | 2 | 27307 | CLAMP ASSY; HOSE / TUBING |
| 26 | 1 | OR-152-5 | O-RING; ROTATION MOTOR |
| 27 | 1 | !ZERK-013-27 NPT-90 | FITTING; GREASE, 90° |
| 28 | 2 | 26586 | GROMMET - RUBBER |
| 29 | 1 | 25255 | BARRIER STRIP MNTG BRACKET |
| 30 | - | | |
| 31 | - | | |
| 32 | - | | |
| 33 | - | | |
| 34 | - | | |
| 35 | - | | |
| 36 | - | | |
| 37 | - | | |
| 38 | - | | |
| 39 | - | | |
| 40 | - | | |

REFERENCE 28611 FOR REPLACEMENT PARTS DRAWING

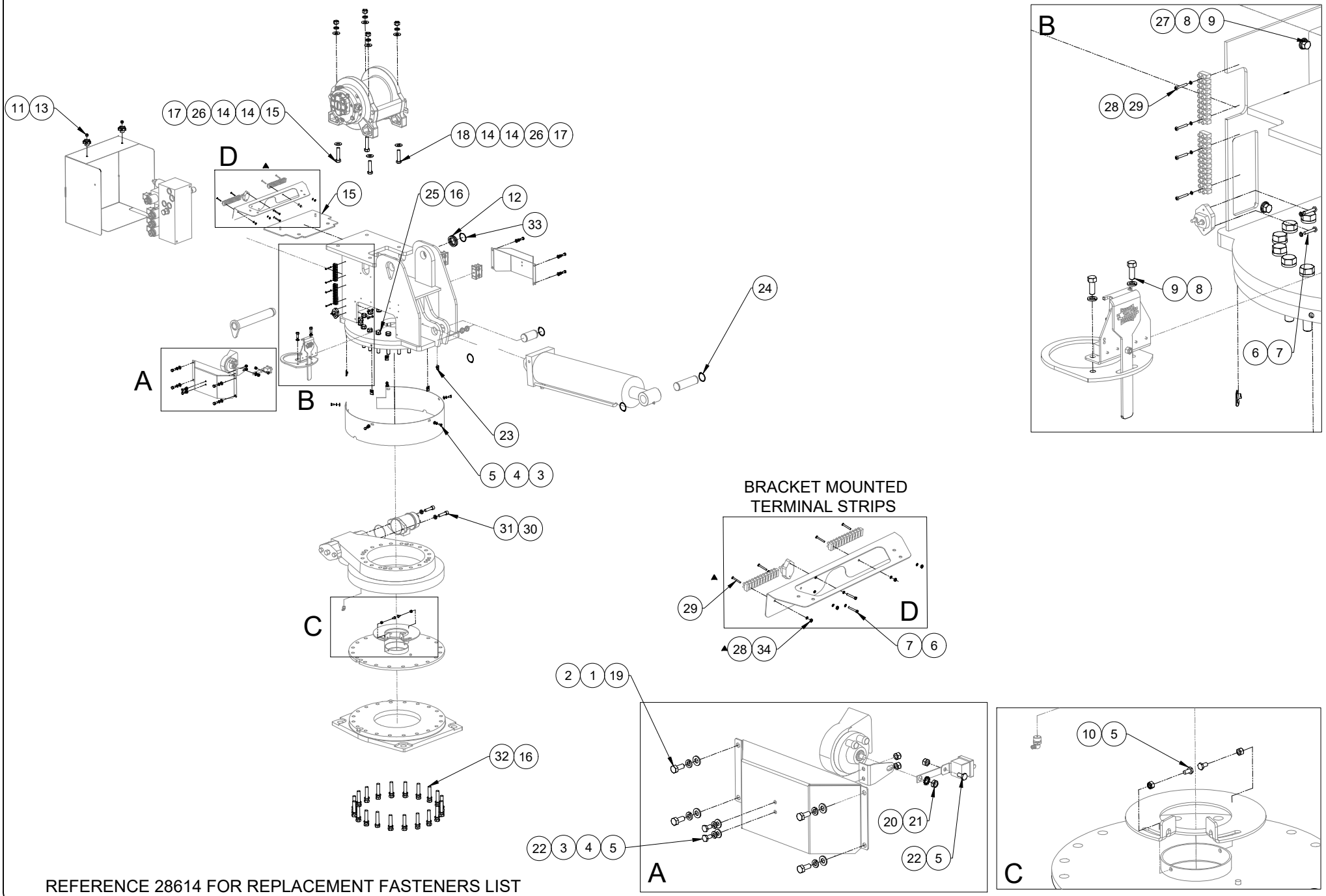


REFERENCE 28614 FOR REPLACEMENT FASTENERS LIST

VENTURO®

VENCO VENTURO INDUSTRIES LLC
CINCINNATI, OHIO

| TITLE | DATE | SECTION |
|---|---|---|
| REPLACEMENT FASTENERS DWG - MECH | 10-19-26A | C400 |
| 12025H/12030H | SUPERSEDES 08-21-25 | 28613 |

# REPLACEMENT FASTENERS LIST - 12025H/12030H; MECHANISM

| ITEM | QTY. | PART NUMBER | DESCRIPTION |
|---|---|---|---|
| 1 | 8 | !LWSH-031S | LOCK WASHER; 5/16", S/S |
| 2 | 8 | !FWSH-031S | FLAT WASHER; 5/16", S/S |
| 3 | 7 | !FWSH-025S | FLAT WASHER; 1/4", S/S |
| 4 | 7 | !LWSH-025S | LOCK WASHER; 1/4", S/S |
| 5 | 10 | !HHCS02520050S | HHCS; 1/4"-20 x 1/2" LG, S/S |
| 6 | 2 | !LWSH-#10S | LOCK WASHER; #10, S/S |
| 7 | 2 | !SHCS#0832100S | SHCS; #10-32 X 1", S/S |
| 8 | 4 | !LWSH-038 | LOCK WASHER; 3/8", ZINC-PLTD |
| 9 | 4 | !HHCS03816100 | HHCS; 3/8"-16 X 1", ZINC-PLTD |
| 10 | 2 | !LNUT-02520 | LOCK NUT; 1/4"-20, NYLON, ZINC |
| 11 | 2 | 28327 | KNOB, HAND, 5-POINT |
| 12 | 2 | 26609 | SHIM - STAINLESS STEEL |
| 13 | 4 | !LNUT-02520-H | LOCK NUT; 1/4"-20, HVY PAT, NYLON |
| 14 | 8 | !FWSH-063 | FLAT WASHER; 5/8", GR. 8 |
| 15 | 2 | !HHCS06311275 | HHCS; 5/8"-11 X 2-3/4" LG, GR 8 |
| 16 | 40 | !LWSH-063 | LOCK WASHER; 5/8", GR. 5, ZINC |
| 17 | 4 | !HNUT-06311-8 | HEX NUT; 5/8"-11, GR. 8 |
| 18 | 2 | !HHCS06311250-8 | HHCS; 5/8"-11 X 2-1/2" LG, GR 8 |
| 19 | 8 | !HHCS03118075S | HHCS; 5/16"-18 X 3/4", S/S |
| 20 | 1 | !LWSH-031-STAR | LOCK WASHER; 5/16", ZINC |

| ITEM | QTY. | PART NUMBER | DESCRIPTION |
|---|---|---|---|
| 21 | 1 | !HNUT-03118 | HEX NUT; 5/16"-18, ZINC |
| 22 | 5 | !LNUT-02520SS | NYLOCK HEX NUT 1/4"-20 |
| 23 | 5 | !UNUT-02520-LKG | U-NUT 1/4"-20, LOCKING TYPE |
| 24 | 4 | !SRNG-175 | SNAP RING; 1-3/4", ZINC-PLTD |
| 25 | 20 | !HHCS06311450 | HHCS; 5/8"-11 x 4-1/2" LG, GR. 5, ZINC |
| 26 | 4 | !LWSH-063 | LOCK WASHER; 5/8", GR. 8, ZINC |
| 27 | 2 | !FWSH-038 | FLAT WASHER; 3/8", ZINC-PLTD |
| 28 | 2 | !LWSH-#06S | LOCK WASHER; #6. S/S |
| 29 | 2 | !PHPMS#0632100S | PHILIPS-HD PMS; #6-32 X 1", S/S |
| 30 | 2 | !LWSH-050-HC | LOCK WASHER; 1/2", HI-COLLAR |
| 31 | 2 | !SHCS05013200 | SOCKET HEAD CAP SCREW - 1/2"-13 X 2" LG |
| 32 | 20 | !HHCS06311300 | HHCS; 5/8"-11 x 3" LG, GR. 5, ZINC |
| 33 | 1 | 24842-175 | SPIRAL RETAINING RING - 1-3/4 - STAINLESS |
| 34 | 4 | !HNUT-#06-32S | HEX NUT; #06-32, S/S ▲ |
| 35 | - | | |
| 36 | - | | |
| 37 | - | | |
| 38 | - | | |
| 39 | - | | |
| 40 | - | | |

HHCS = HEX HEAD CAP SCREW, SHCS = SOCKET HEAD CAP SCREW, PMS = PAN MACHINE SCREW, S/S = STAINLESS STEEL

REFERENCE 28613 FOR REPLACEMENT FASTENERS DRAWING

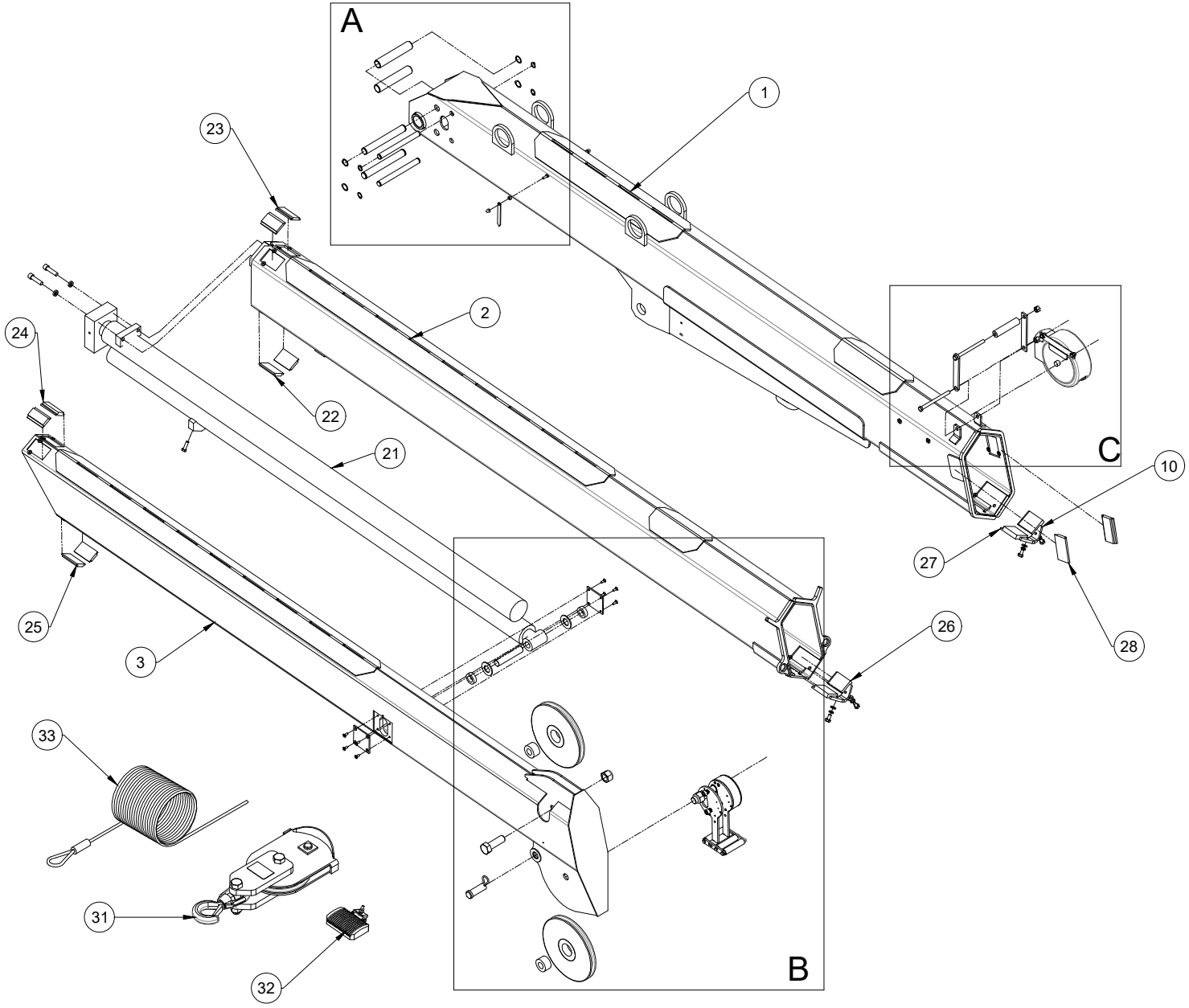


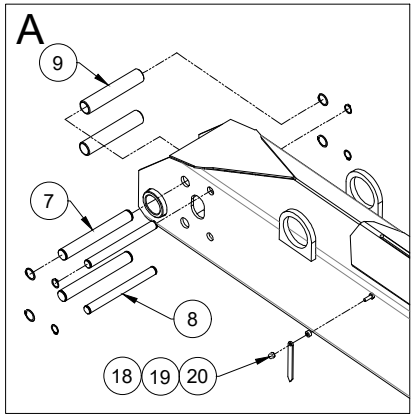


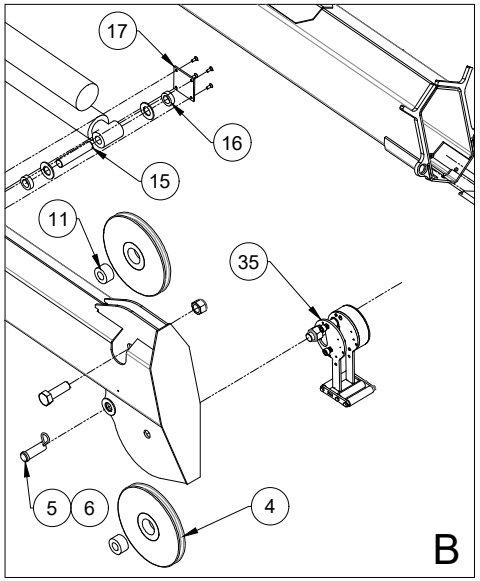


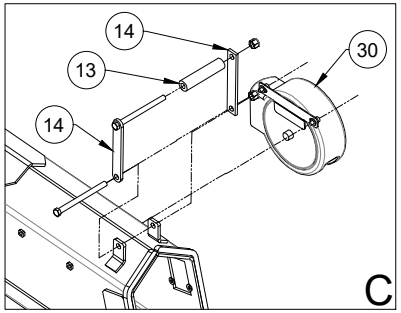


REFERENCE 28776 FOR REPLACEMENT PARTS LIST

☼ ITEM #32 IS OPTIONAL, AND NOT INCLUDED WITH STANDARD EQUIPMENT

| | | | |
|---|---|---|---|
| VENTURO® VENCO VENTURO INDUSTRIES LLC CINCINNATI, OHIO | TITLE<br>RPLCMNT PARTS DRAWING - 24946 BOOM | DATE<br>09-29-25 | SECTION<br>C400 |
| | 12025H | SUPERSEDES<br>- | 28775 |

# REPLACEMENT PARTS LIST - 12025H; 24946 BOOM

| ITEM NO. | QTY. | PART NUMBER | DESCRIPTION |
|---|---|---|---|
| 1 | 1 | 24945 | WELDED ASSY; PRIMARY BOOM |
| 2 | 1 | 27264 | WELDED ASSY; SECONDARY BOOM |
| 3 | 1 | 27266 | WELDED ASSY; TERTIARY BOOM |
| 4 | 2 | 27241 | CABLE SHEAVE |
| 5 | 1 | 27272 | 1X2.5 CLEVIS PIN |
| 6 | 1 | 21-08 | HAIRPIN COTTER |
| 7 | 2 | 27282 | THRUST PIN; REAR, EXTENSION CYLINDER |
| 8 | 2 | 27293 | THRUST PIN; FRONT, EXTENSION CYLINDER |
| 9 | 2 | 27283 | THRUST ROLLER; EXTENSION CYLINDER |
| 10 | 2 | 23183 | V-BLOCK SLIDER |
| 11 | 2 | 27256 | SPACER - FOR 27241 POLY SHEAVES |
| 12 | - | - | - |
| 13 | 1 | 21560 | ROLLER,UHMW GUIDE |
| 14 | 2 | 21936 | FLAT,MOUNT;WIRE ROPE GUIDE |
| 15 | 1 | 21405 | PIN - CYLINDER |
| 16 | 2 | 21428 | BUSHING |
| 17 | 2 | 23116 | PIN BLOCK REINFORCING |
| 18 | 2 | 22490 | SPACER, BOOM ARROW 1/2" O.D. |
| 19 | 2 | 13459-2 | BOOM ARROW 4-7/16 LONG |
| 20 | 2 | !ANUT-02520S | ACORN NUT 1/4-20 STAINLESS |

| ITEM NO. | QTY. | PART NUMBER | DESCRIPTION |
|---|---|---|---|
| 21 | 1 | 21751 | EXTENSION CYLINDER |
| 22 | 2 | 23217-2 | BOOM PAD; UHMW, 'A', 3.19 x 2.13 x 0.44 |
| 23 | 2 | 23217-12 | BOOM PAD; UHMW, 'A', 3.19 x 2.13 x 0.50 |
| 24 | 2 | 23217-11 | BOOM PAD; UHMW, 'A', 3.19 x 1.88 x 0.50 |
| 25 | 2 | 23217-1 | BOOM PAD; UHMW, 'A', 3.19 x 1.88 x 0.44 |
| 26 | 2 | 23217-3 | BOOM PAD; UHMW, 'B', 3.19 x 2.13 x 0.63 |
| 27 | 2 | 23217-4 | BOOM PAD; UHMW, 'B', 3.19 x 2.50 x 0.63 |
| 28 | 2 | 23217-13 | BOOM PAD; UHMW, 'A', 3.19 x 2.13 x 0.38 |
| 29 | - | - | - |
| 30 | 1 | 26577-4 | CORD REEL ASSY (BLK/YEL PLASTIC CASE) |
| 31 | 1 | 27254 | LOAD BLOCK ASSEMBLY |
| ☼32 | 1 | 27483 | ASSY; WORK LIGHT, LED |
| 33 | 1 | 28337-7/16-100 | WIRE ROPE 7/16"-100' |
| 34 | - | - | - |
| 35 | 1 | 27487 | COMPACT A2B |
| 36 | - | | |
| 37 | - | | |
| 38 | - | | |
| 39 | - | | |
| 40 | - | | |

REFERENCE 28775 FOR REPLACEMENT PARTS DRAWING

☼ OPTIONAL; NOT INCLUDED WITH STANDARD EQUIPMENT

VENTURO®

VENCO VENTURO INDUSTRIES LLC
CINCINNATI, OHIO

| TITLE | DATE | SECTION |
|---|---|---|
| REPLACEMENT PARTS LIST - 24946 BOOM | 09-29-25 | C400 |
| 12025H | SUPERSEDES - | 28776 |

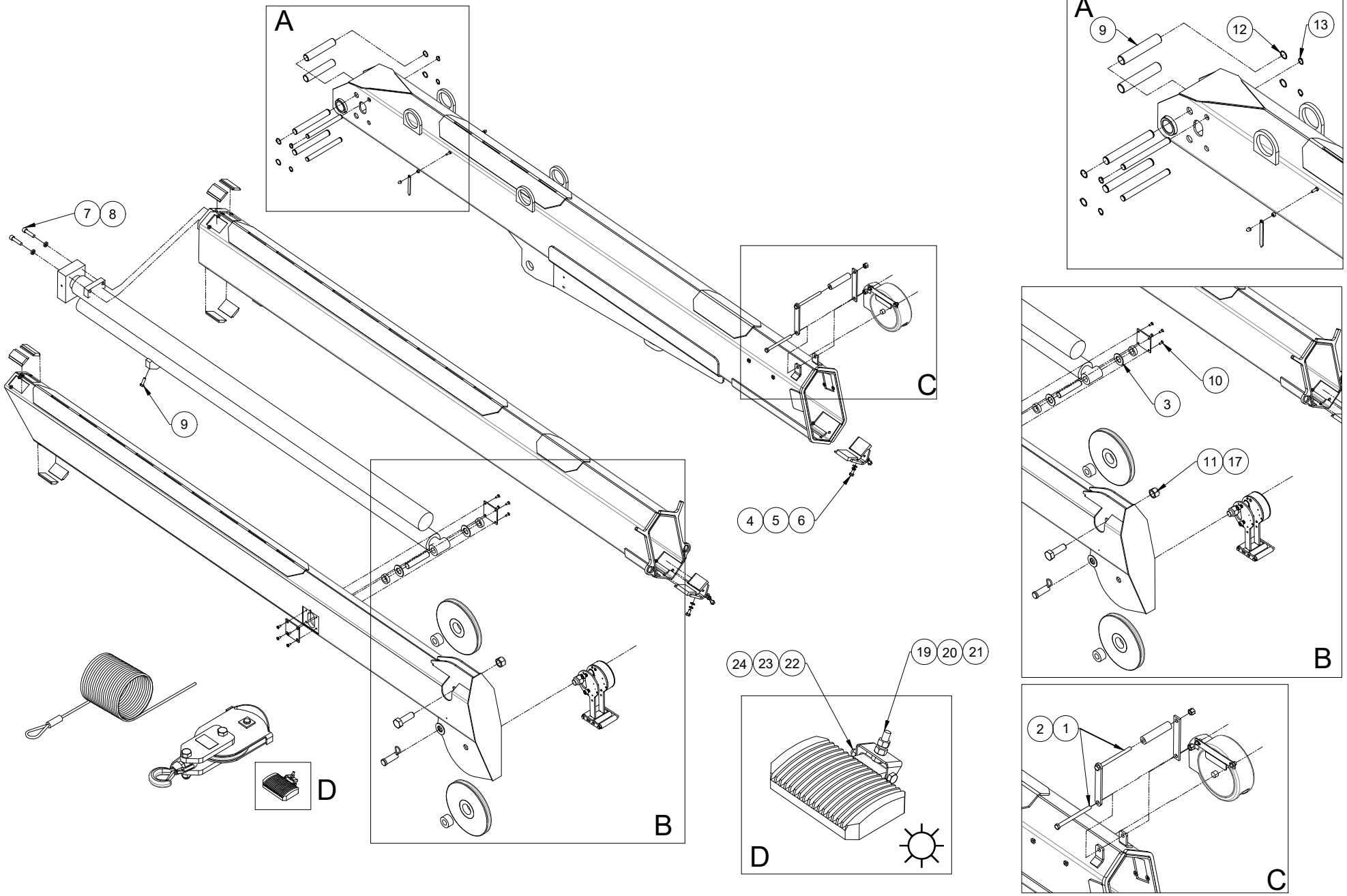


REFERENCE 28778 FOR REPLACEMENT FASTENERS LIST

☼ ITEMS #19-23 ARE FASTENERS FOR OPTIONAL COMPONENTS - NOT INCLUDED WITH STANDARD EQUIPMENT

VENTURO®

VENCO VENTURO INDUSTRIES LLC
CINCINNATI, OHIO

| TITLE | DATE | SECTION |
|---|---|---|
| REPL FASTENERS DWG - 24946 BOOM | 09-30-25 | C400 |
| 12025H | SUPERSEDES<br>- | 28777 |

# REPLACEMENT FASTENERS LIST - 12025H; 24946 BOOM

| ITEM NO. | QTY. | PART NUMBER | DESCRIPTION |
|---|---|---|---|
| 1 | 2 | !HHCS04414550 | HHCS - 7/16-14 X 5-1/2 LG |
| 2 | 2 | !LNUT-04414 | LOCK NUT; 7/16"-14 NYLON, GR. 5, ZINC-PLTD |
| 3 | 3 | 12534-XX | ZINC PLATED MACHINERY BUSHINGS |
| 4 | 4 | !FWSH-038 | FLAT WASHER; 3/8", ZINC-PLTD |
| 5 | 4 | !LWSH-038 | LOCK WASHER; 3/8", ZINC-PLTD |
| 6 | 4 | !HHCS03816075 | HHCS - 3/8-16" X 3/4 |
| 7 | 2 | !LWSH-050-HC | LOCK WASHER; 1/2", HI-COLLAR |
| 8 | 2 | !SHCS05013200 | SOCKET HEAD CAP SCREW - 1/2-13 X 2 LG |
| 9 | 2 | !HHCS03816100N | HHCS; NYLON PATCH 3/8-16 X 1", GR. 5 ZINC |
| 10 | 8 | !CACS02520050S | CACS; 1/4-20 X 1/2", S/S |
| 11 | 1 | !HHCS10008300 | HHCS; 1-8 X 3", GR. 5, ZINC -PLTD |
| 12 | 4 | !SRNG-100 | RETAINING RING - 1" SHAFT DIA. |
| 13 | 4 | !SRNG-075 | RETAINING RING - 3/4" SHAFT DIA. |
| 14 | - | - | - |
| 15 | - | - | - |
| 16 | - | - | - |
| 17 | 1 | !LNUT-10008 | LOCK NUT; 1"-8, NYLON, GR. 8, ZINC-PLTD |
| 18 | - | - | - |
| ☼19 | 1 | !HHCS03118125S | HHCS; 5/16-18 X 1-1/4", S/S |
| ☼20 | 2 | !HNUT-03118S | HEX NUT; 5/16-18, S/S |

| ITEM NO. | QTY. | PART NUMBER | DESCRIPTION |
|---|---|---|---|
| ☼21 | 1 | !FWSH-031S | FLAT WASHER; 5/16", S/S |
| ☼22 | 1 | !HHCS02520250S | HHCS; 1/4-20 X 2-1/2", S/S |
| ☼23 | 1 | !LWSH-025S | LOCK WASHER; 1/4", S/S |
| ☼24 | 1 | !HNUT-02520S | HEX NUT; 1/4-20, S/S |
| 25 | - | | |
| 26 | - | | |
| 27 | - | | |
| 28 | - | | |
| 29 | - | | |
| 30 | - | | |
| 31 | - | | |
| 32 | - | | |
| 33 | - | | |
| 34 | - | | |
| 35 | - | | |
| 36 | - | | |
| 37 | - | | |
| 38 | - | | |
| 39 | - | | |
| 40 | - | | |

☼ ITEMS #19-24 ARE FOR OPTIONAL COMPONENTS - NOT INCLUDED WITH STANDARD EQUIPMENT

*HHCS = HEX HEAD CAP SCREW  PMS = PAN MACHINE SCREW  S/S = STAINLESS STEEL  CACS = COUNTERSINK CAP SCREW*

REFERENCE 28777 FOR REPLACEMENT FASTENERS DRAWING

VENTURO®

VENCO VENTURO INDUSTRIES LLC
CINCINNATI, OHIO

| TITLE | DATE | SECTION |
|---|---|---|
| REPLACEMENT FASTENERS LIST - 24946 BOOM | 09-30-25 | C400 |
| 12025H | SUPERSEDES<br>- | 28778 |

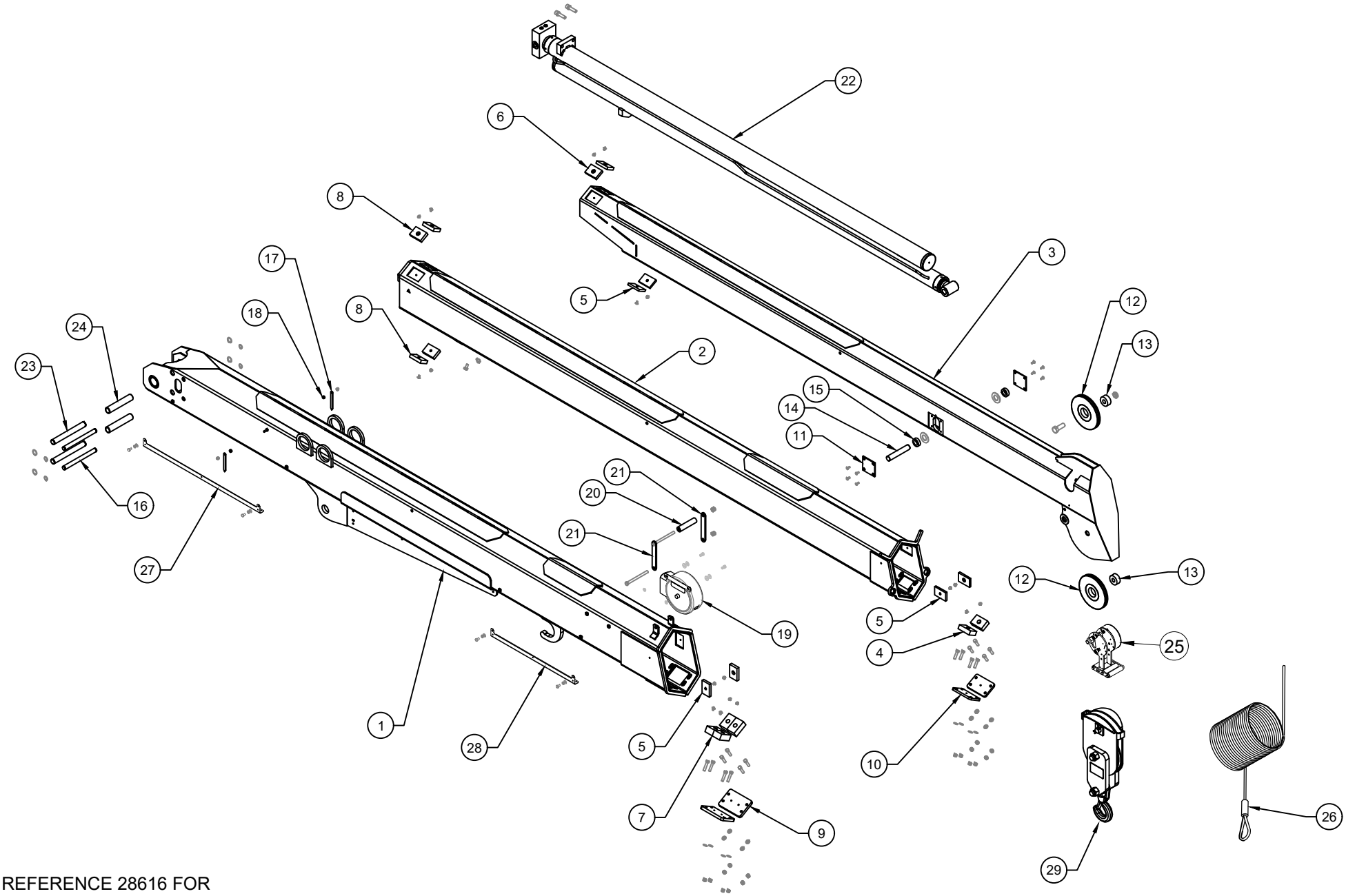


REFERENCE 28616 FOR
REPLACEMENT PARTS LIST

| | | | |
|---|---|---|---|
| VENTURO® VENCO VENTURO INDUSTRIES LLC CINCINNATI, OHIO | TITLE<br>REPL PARTS DWG, 30' BOOM, 24700 | DATE<br>08-21-25 | SECTION<br>C400 |
| | 12030H | SUPERSEDES<br>- | 28615 |

# REPLACEMENT PART LIST, 30' BOOM 24700

| ITEM NO. | PART NO. | QTY | DESCRIPTION |
|---|---|---|---|
| 1 | 24701 | 1 | PRIMARY BOOM WELDMENT |
| 2 | 24705 | 1 | SECONDARY BOOM WELDMENT |
| 3 | 24706 | 1 | TERTIARY BOOM WELDMENT |
| 4 | 23631-7 | 2 | BOOM PAD; 0.88" THICK |
| 5 | 23631-3 | 6 | BOOM PAD; 0.38" THICK |
| 6 | 23631-4 | 2 | BOOM PAD; 0.50" THICK |
| 7 | 23631-10 | 4 | BOOM PAD; 1.25" THICK |
| 8 | 23631-5 | 4 | BOOM PAD; 0.63" THICK |
| 9 | 23677 | 2 | COVER PLATE; PRIM. ADJ. PAD |
| 10 | 23678 | 2 | COVER PLATE; SEC. ADJ. PAD |
| 11 | 23116 | 2 | PIN BLOCK; REINFORCING |
| 12 | 27241 | 2 | BOOM SHEAVE W/ BUSHING |
| 13 | 27256 | 2 | SPACER; 27241 POLY SHEAVES |
| 14 | 23906 | 1 | PIN; PIVOT, ROD END, EXT. CYLINDER |
| 15 | 21428 | 2 | BUSHING |
| 16 | 23904 | 2 | EXTENSION CYLINDER 0.75" THRUST PIN |
| 17 | 13459 | 2 | ARROW |
| 18 | 22490 | 2 | SPACER; BOOM ARROW |
| 19 | 26577-4 | 1 | CORD REEL ASSY (BLK/YEL PLASTIC CASE) |
| 20 | 21560 | 1 | WIRE ROPE GUIDE; UMHW ROLLER |
| 21 | 21936 | 2 | WIRE ROPE GUIDE; FLAT, MOUNT |
| 22 | 23875 | 1 | EXTENSION CYLINDER |
| 23 | 23905 | 2 | EXTENSION CYLINDER 1" THRUST PIN |
| 24 | 27283 | 2 | THRUST ROLLER |
| 25 | 27487 | 1 | ANTI-TWO-BLOCK ASSEMBLY |
| 26 | 28337-7/16-125 | 1 | WIRE ROPE; 125 FT, NO HOOK |
| 27 | 26940 | 1 | CABLE GUARD BRACKET (LONG) |
| 28 | 26940-2 | 1 | CABLE GUARD BRACKET (SHORT) |
| 29 | 27254 | 1 | LOAD BLOCK ASSEMBLY |

REFERENCE 28615 FOR REPLACEMENT PARTS DRAWING

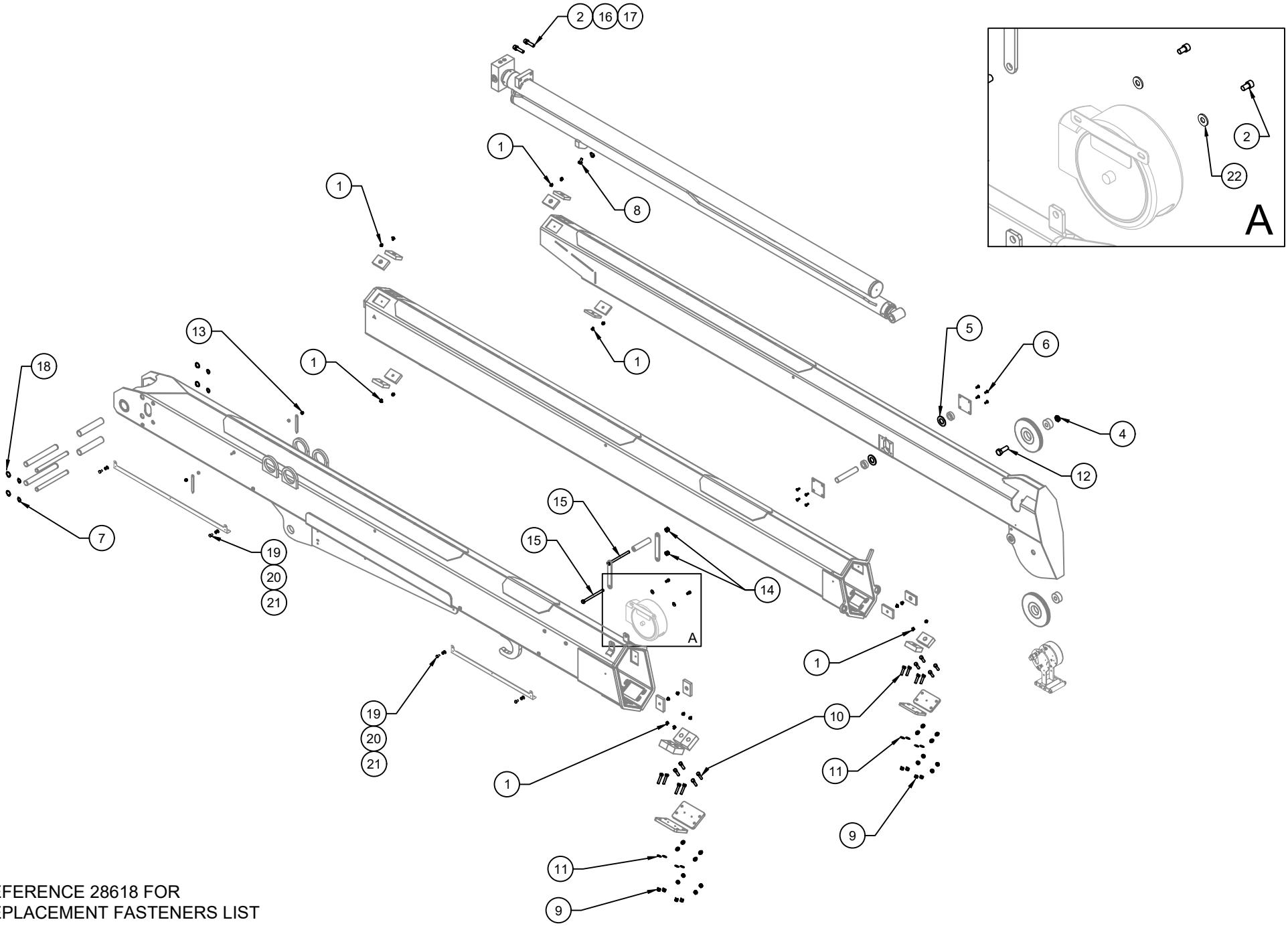


REFERENCE 28618 FOR
REPLACEMENT FASTENERS LIST

| | | | |
|---|---|---|---|
| VENTURO® VENCO VENTURO INDUSTRIES LLC CINCINNATI, OHIO | TITLE<br>REPL HARDWARE DWG, 30' BOOM 24700 | DATE<br>08-22-25 | SECTION<br>C400 |
| | 12030H | SUPERSEDES<br>- | 28617 |

# REPLACEMENT FASTENERS LIST, 30' BOOM 24700

| ITEM NO. | PART NO. | QTY. | DESCRIPTION |
|---|---|---|---|
| 1 | !THCS02520038 | 18 | THCS; 1/4-20 x 3/8" LG, S/S |
| 2 | 14159 | 1 | SHIM KIT |
| 3 | !SHCS03118063S | 2 | SHCS; 5/16-18 X 5/8" LG, S/S |
| 4 | !LNUT-07510 | 1 | LOCK NUT; 3/4-10, NYLON, ZINC |
| 5 | !FWSH-100SAE | 2 | FLAT WASHER; 1" SAE |
| 6 | !CACS02520050S | 8 | CACS; 1/4-20 x 1/2" LG, S/S |
| 7 | !SRNG-075 | 4 | SNAP RING; 3/4" |
| 8 | !HHCS03816100N | 2 | HHCS; NYLON PATCH 3/8-16 X 1", GR. 5 ZINC |
| 9 | !LNUT-03816 | 16 | LOCK NUT; 3/8-16, GR. 5, ZINC |
| 10 | !HHCS03816175 | 16 | HHCS; 3/8-16 x 1-3/4" LG, GR. 5, ZINC |
| 11 | !FWSH-038 | 16 | FLAT WASHER; 3/8", ZINC |
| 12 | !HHCS07510350 | 1 | HHCS; 3/4-10 x 3-1/2" LG, GR. 5, ZINC |
| 13 | !ANUT-02520S | 2 | ACORN NUT; 1/4-20, S/S |
| 14 | !LNUT-04414 | 2 | LOCK NUT; 7/16-14, NYLON INSERT |
| 15 | !HHCS04414550 | 1 | HHCS; 7/16-14 x 5-1/2", GR. 5, ZINC |
| 16 | !SHCS05013200 | 2 | SHCS; 1/2-13 x 2" |
| 17 | !LWSH-050-HC | 2 | LOCK WASHER; 1/2, GR. 5, ZINC, HI-COLLAR |
| 18 | !SRNG-100 | 3 | SNAP RING; 1" |
| 19 | !HHCS03118050S | 4 | HHCS; 5/16-18 X 1/2", S/S |
| 20 | !LWSH-031S | 4 | LOCK WASHER; 5/16", S/S |
| 21 | !FWSH-031S | 4 | FLAT WASHER; 5/16", S/S |
| 22 | !FWSH-031 | 2 | FLAT WASHER; 5/16" |

REFERENCE 28617 FOR REPLACEMENT FASTENERS DRAWING

# Compact A2B with Stowage Cut-out, Install/Adjustment Instructions

The purpose of the Stowage Cut-out system is to prevent a situation whereby the wire rope is over-tensioned when the load block / wire rope is attached to the stowage hook on the bottom of the primary boom assembly. ***However, the OPERATOR is ultimately responsible for ensuring that the wire rope is not over-tensioned when stowing the wire rope and boom assembly into the boom rest.***

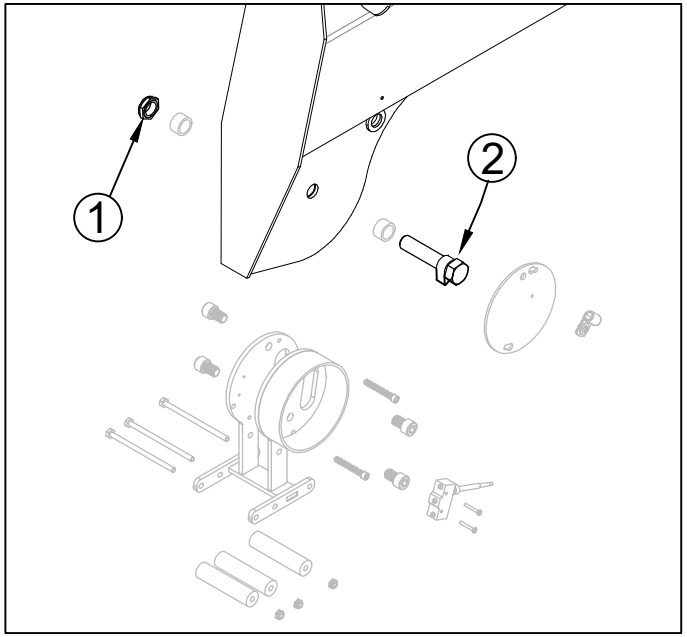


1. Initially, apply a light torque to the nyloc full nut Item #1 (P/N !LNUT-10008), such that the axle bolt & cam welded assembly can be rotated / adjusted in the steps below.
2. Position the cam ***lobe*** Item #2 (P/N 28373) so that it is pointing towards the housing / mechanism
3. Hang the load block on the open stowage hook under the primary boom.
4. Thread the wire rope through the load block in a two-line configuration; the wire rope end / eyelet is pinned in the standard position on the tertiary boom tip
5. Actuate the Winch Up function until the load block and wire rope are ***taut*** enough to prevent the load block from bouncing during transit, ***but do not tighten excessively so as to prevent damage to the wire rope.***
6. Rotate the axle bolt & cam welded assembly towards the housing (clockwise in standard configuration) until the cam lobe makes contact with and trips the wobble micro switch and actuates the A2B function.
7. Once adjusted, torque the nyloc full nut (Item #1) to 100 ft*lbs to prevent further rotational movement of the axle bolt & cam welded assembly.
8. Test the A2B trip-point by slackening and tightening the wire rope / load block assembly by actuating Winch Up/Down. ***NOTE: The point at which the A2B trips WILL vary to some degree, depending upon the winch up speed. It is recommended to actuate the winch up function slowly, which will yield a consistent and repeatable result, in terms of wire rope tension when stowed.***

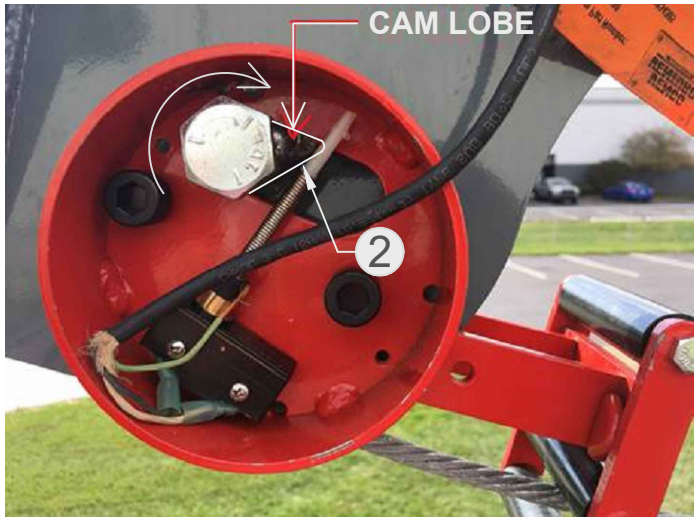


***Contact Venturo Tech Support for assistance. 1-800-226-2238***

# REPLACEMENT PARTS LIST - 27487 COMPACT A2B

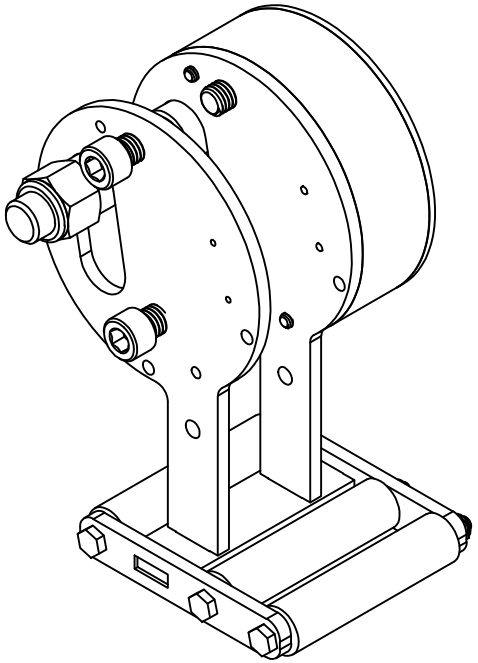

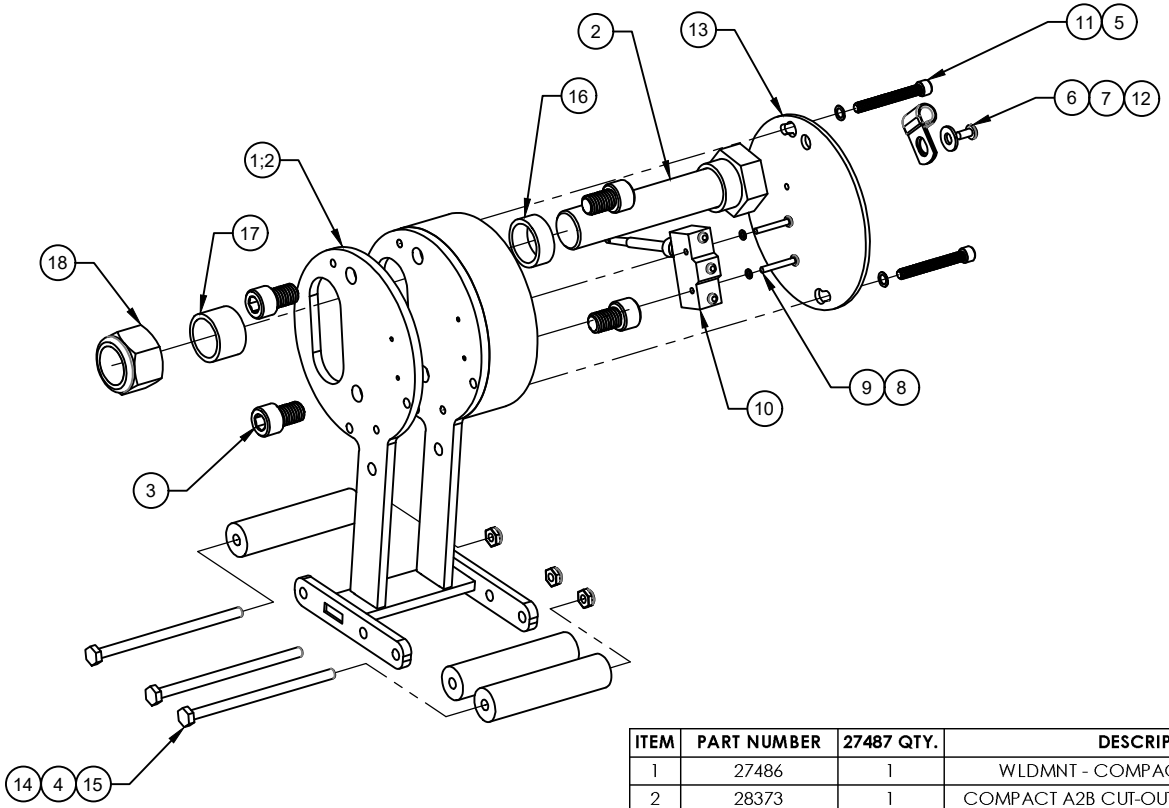


| ITEM | PART NUMBER | 27487 QTY. | DESCRIPTION |
|---|---|---|---|
| 1 | 27486 | 1 | WLDMNT - COMPACT A2B FRAME LH |
| 2 | 28373 | 1 | COMPACT A2B CUT-OUT CAM WELDED ASSY |
| 3 | 27467 | 4 | SHCS NYLON BLACK 1/2-13 X 3/4 LG |
| 4 | 27475 | 3 | WIRE ROPE GUIDE ROLLER |
| 5 | 23379 | 2 | WASHER, NYLON, BLACK, .375" O.D. X .25" I.D. |
| 6 | !PHCS#1032038 | 1 | PAN HEAD CAP SCREW 10-32 X 3/8 LONG |
| 7 | !FWSH-025 | 1 | FLAT WASHER - 1/4 |
| 8 | !LWSH-#06 | 2 | LOCK WASHER - 6 |
| 9 | !PHCS#0632100 | 2 | PHILLIPS HEAD CAP SCREW 6-32 X 1 LONG |
| 10 | 19376 | 1 | ANTI-TWO BLOCK SWITCH |
| 11 | !SHCS02520200SS | 2 | SHCS, 1/4-20 X 2.00 LONG, STAINLESS STEEL |
| 12 | 19269 | 1 | WIRE CLAMP, 3/8 ID VIBRATION DAMPING |
| 13 | 27473 | 1 | COVER PLATE |
| 14 | !JNUT-02520N | 3 | NYLON INSERT JAM NUT - 1/4-20 |
| 15 | !HHCS02520450 | 3 | HHCS 1/4-20 X 4-1/2 LG |
| 16 | 27466-1 | 1 | SPACER - COMPACT A2B, .47 LG (HT66) |
| 17 | 27466-2 | 1 | SPACER - COMPACT A2B, .81 LG (HT66) |
| 18 | !LNUT-10008 | 1 | HEX NUT; 1-8, GR. 5, ZINC-PLTD |

VENTURO®

VENCO VENTURO INDUSTRIES LLC
CINCINNATI, OHIO

| TITLE | DATE | SECTION |
|---|---|---|
| REPLACEMENT PARTS LIST -27487 COMPACT A2B | 08-22-25 | C400 |
| 12025H/12030H | SUPERSEDES<br>- | 28619 |

# REPLACEMENT PARTS DRAWING; 27274 WINCH

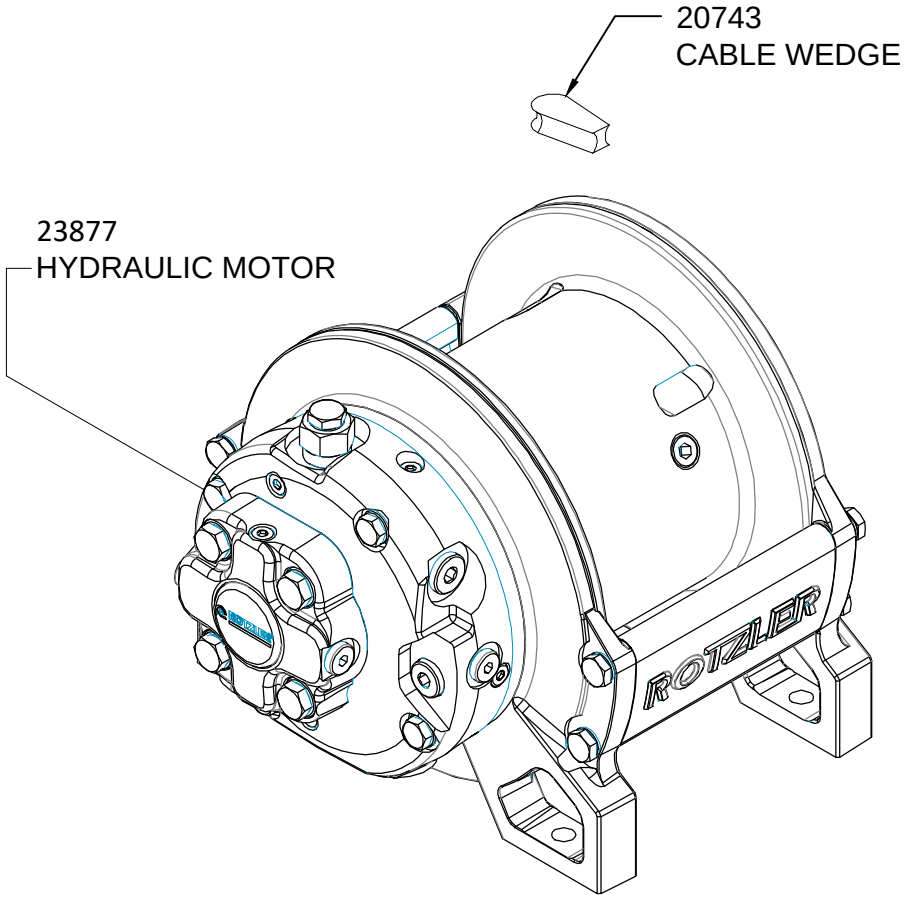


WINCH SEALS PACKAGE: 23848

| | | | |
|---|---|---|---|
| VENTURO® VENCO VENTURO INDUSTRIES LLC CINCINNATI, OHIO | TITLE<br>REPLACEMENT PARTS DRAWING | DATE<br>11-10-22-C | SECTION<br>C400 |
| | HT60/66KX SERIES CRANES | SUPERSEDES<br>04-05-21B | 27332 |

# REPLACEMENT PARTS LIST ; 27254 LOAD BLOCK

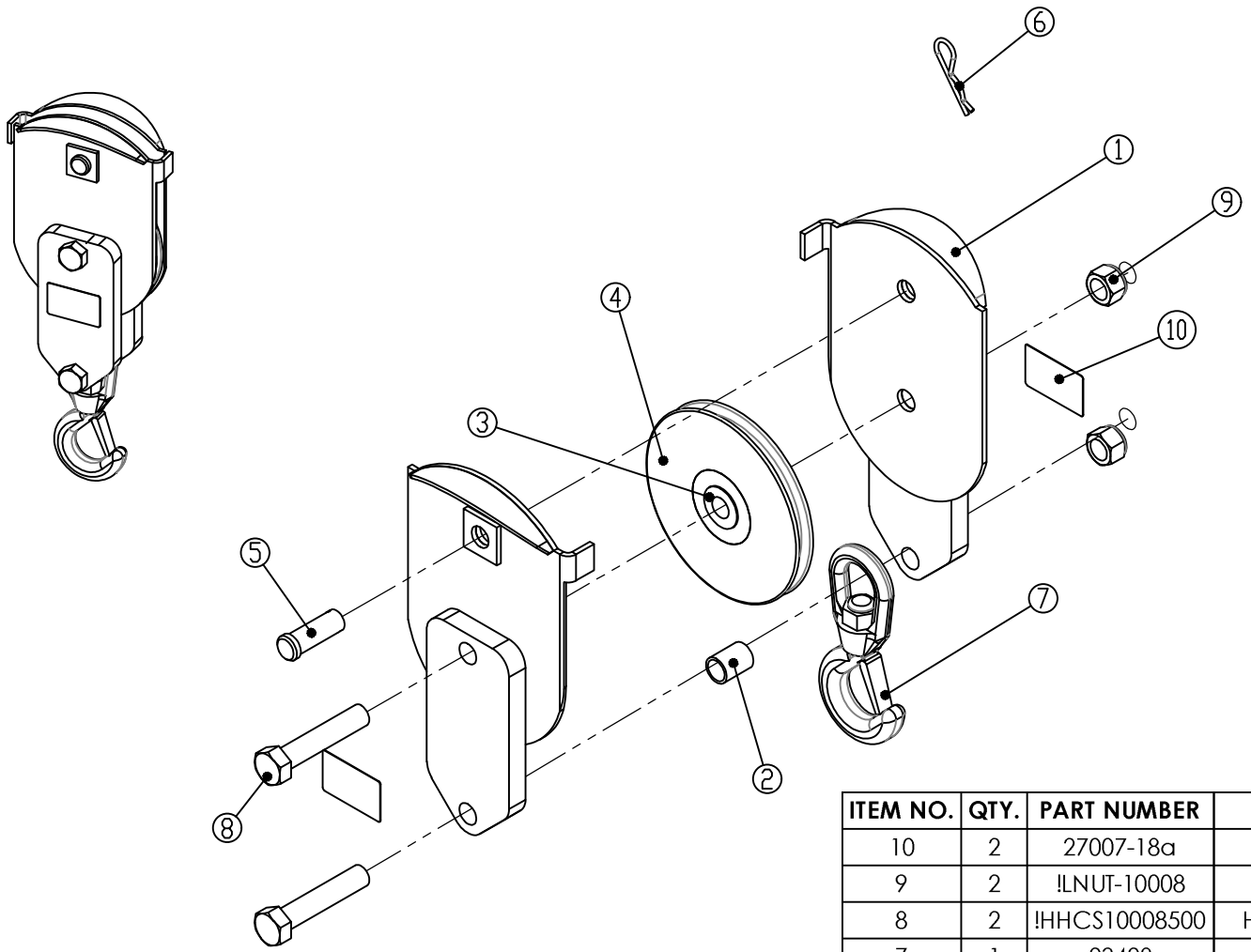


| ITEM NO. | QTY. | PART NUMBER | DESCRIPTION |
|---|---|---|---|
| 10 | 2 | 27007-18a | DECAL; CAPACITY, 12000 LBS. |
| 9 | 2 | !LNUT-10008 | HEX NUT; 1-8, GR. 5, ZINC-PLTD |
| 8 | 2 | !HHCS10008500 | HEX HD CAP SCREW 1-8X5", GR. 8 |
| 7 | 1 | 23428 | SWIVEL HOOK W/ SAFETY LATCH |
| 6 | 1 | 21-08 | HAIRPIN COTTER |
| 5 | 1 | 27272 | 1X2.5 CLEVIS PIN |
| 4 | 1 | 27242 | SHEAVE |
| 3 | 1 | 27256 | SHEAVE SPACER |
| 2 | 1 | 27253 | SPACER |
| 1 | 2 | 27250 | SHEAVE SIDE PLATE ASSEMBLY |

VENTURO®

VENCO VENTURO INDUSTRIES LLC
CINCINNATI, OHIO

| TITLE | DATE | SECTION |
|---|---|---|
| REPLACEMENT PARTS LIST -27254 LOAD BLOCK | 08-22-25 | C400 |
| 12025H/12030H | SUPERSEDES<br>- | 28621 |

# REPLACEMENT PARTS DRAWING - HYDRAULIC COMPONENTS

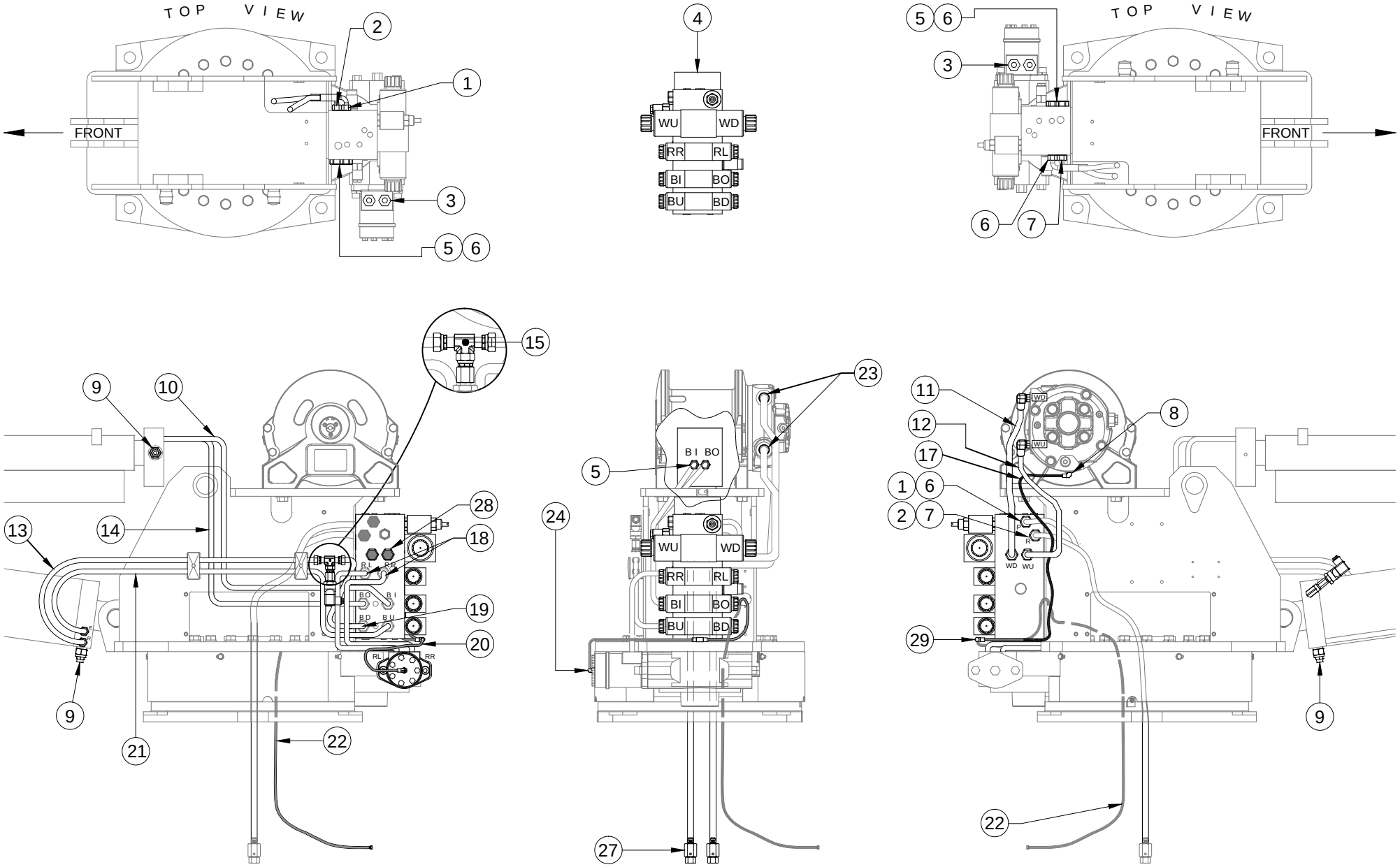


REFERENCE 28518 FOR REPLACEMENT PARTS LIST

HOSE ROUTINGS ARE FOR REFERENCE ONLY

| | | | |
|---|---|---|---|
| VENTURO® VENCO VENTURO INDUSTRIES LLC CINCINNATI, OHIO | TITLE<br>RPLCMNT PARTS DWG - HYD. COMPONENTS | DATE<br>07-09-24 | SECTION<br>C400 |
| | HT60/66KX VLC SERIES | SUPERSEDES<br>- | 28517 |

# REPLACEMENT PARTS LIST - HYD. COMPONENTS

| ITEM | PART NO. | QTY | DESCRIPTION | INSTALLATION |
|---|---|---|---|---|
| 1 | 28477 | 1 | HOSE ASS'Y; PRESSURE | FF6400-0810 (MANIFOLD) TO COMPARTMENT |
| 2 | 28267 | 1 | HOSE ASS'Y; RETURN | FF6400-0812 (MANIFOLD) TO COMPARTMENT |
| 3 | FF6400-0610 | 2 | FITTING; STRAIGHT ADAPTER, 6OFS-10MO | ROTATION MOTOR PORTS |
| 4 | 22736H-1 | 1 | VALVE MANIFOLD; HI-FLOW, 3000 PSI | - |
| 5 | FF6400-0606 | 10 | FITTING; STRAIGHT ADAPTER, 6OFS-6MO | RL/RR/BI/BO/BU/BD MANIFOLD PORTS, CYL. PORTS |
| 6 | FF6400-0810 | 3 | FITTING; STRAIGHT ADAPTER, 8OFS-10MO | MANIFOLD PORTS: 'P' (RIGHT), WU/WD (LEFT) |
| 7 | FF6400-0812 | 1 | FITTING; STRAIGHT ADAPTER, 8OFS-12MO | MANIFOLD RETURN PORT (RIGHT) |
| 8 | 3802-0404 (FF3802-4-4) | 1 | FITTING; ADAPTER, 45° ELBOW, 04MJ-04MBP (MALE BRITISH PARALLEL) | WINCH CASE DRAIN PORT |
| 9 | 20893 | 2 | COUNTER-BALANCE VALVE | ELEVATION & EXTENSION CYLINDERS |
| 10 | 27593 | 1 | HOSE ASS'Y; BOOM IN | FF6400-0606 (MANIFOLD) - FF6400-0606 (EXT. CYL.) |
| 11 | 27025 | 1 | HOSE ASS'Y; WINCH DOWN | FF6400-0810 (MANIFOLD) - FF3801-8-12 (WINCH) |
| 12 | 27024 | 1 | HOSE ASS'Y; WINCH UP | FF6400-0810 (MANIFOLD) - FF3801-8-12 (WINCH) |
| 13 | 28052 | 1 | HOSE ASS'Y; BOOM DOWN, CYL-SIDE | 23731 - FF6400-0606 (ELEV. CYL. 'R' PORT) |
| 14 | 27592 | 1 | HOSE ASS'Y; BOOM OUT | FF6400-0606 (MANIFOLD) - FF6400-0606 (EXT. CYL.) |
| 15 | FF6602-06-06-06 | 1 | FITTING; TEE, 6MORFS-6FORFS-6MORFS | PRESSURE TRANSDUCER (ROD SIDE) |
| 16 | - | - | - | - |
| 17 | 22953 | 1 | HOSE ASS'Y; CASE DRAIN, 30" LONG | H6801-0404 (WINCH) - H2603-040404 (TEE) |
| 18 | 27598 | 2 | HOSE ASS'Y; ROTATION LEFT/RIGHT | FF6400-0606 (MANIFOLD) - FF6400-0610 (ROT. MTR.) |
| 19 | 28053 | 1 | HOSE ASS'Y; BOOM DOWN, MANIFOLD-SIDE | 23731 - FF6400-0606 (MANIFOLD) |
| 20 | 22952 | 1 | HOSE ASS'Y; CASE DRAIN, 13" LONG | H6801-0404 (ROTATION MTR) - H2603-040404 (TEE) |
| 21 | 28033 | 1 | HOSE ASS'Y; BOOM UP | FF6400-0606 (X2); MANIFOLD - ELEV. CYL. 'E' PORT |
| 22 | 22903 | 1 | HOSE ASS'Y; CASE DRAIN, 96" LONG | H2603-040404 - COMPARTMENT |
| 23 | FF3801-8-12 | 2 | FITTING; 90° ELBOW ADAPTER, 8OFS-12MBP (MALE BRITISH PARALLEL) | WINCH PORTS - 28271, 28272 |
| 24 | H6801-0404 | 1 | FITTING; 90° ELBOW ADAPTER, 4MJ-4MO | ROTATION MOTOR CASE DRAIN PORT |
| 25 | - | - | - | - |
| 26 | - | - | - | - |
| 27 | 22764 | 2 | HYDRAULIC SWIVELS; 8MJ-8FJ | COMPARTMENT - 22765 (PRESS), 22764 (RETURN) |
| 28 | H6408-10 | 2 | FITTING; PLUG, 10MO | MANIFOLD (WU/WD PORTS) |
| 29 | H2603-040404 | 1 | FITTING; T-SHAPE, 4MJ-4MJ-4MJ | 22952, 22953, & 22903 (CASE DRAIN HOSES) |

REFERENCE 28517 FOR REPLACEMENT PARTS DRAWING

# 22736 SERIES VALVE MANIFOLD REPLACEMENT PARTS

| PRIORITY FLOW VALVE | | |
|---|---|---|
| VALVE P/N | MANIFOLD | CRANE |
| 22312-6.00 | 22736H | HT40/50 |
| 22312-7.50 | 22736H-1 | HT66 |
| 22312-7.50 | 22736H-2 | HT60 |
| 22312-7.50 | 22736H-3 | HT40/45/50 |
| NOT SHOWN - LOCATED ON RIGHT SIDE | | |

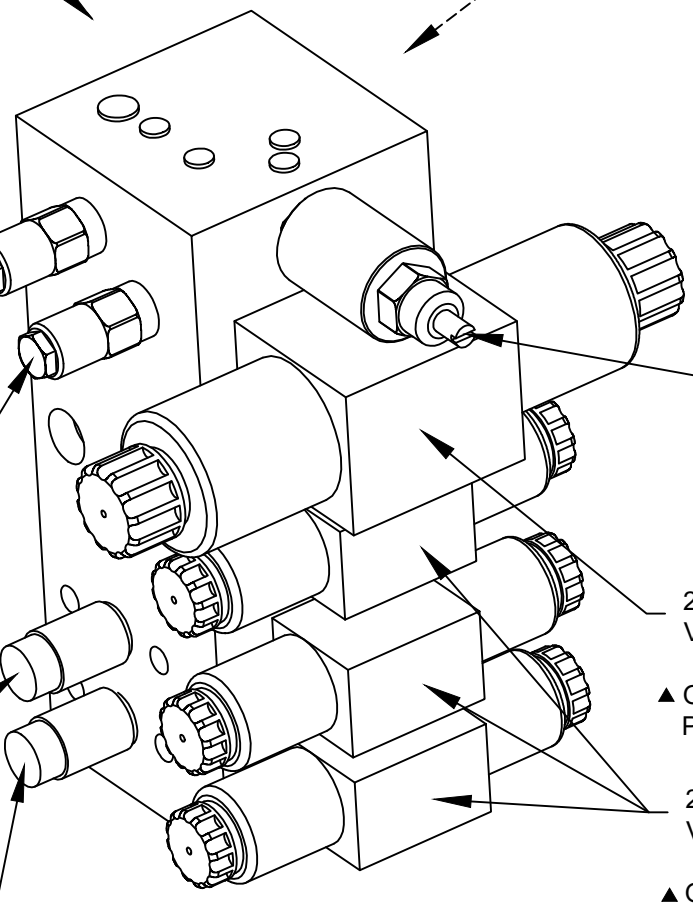

# WORK LIGHT INSTALLATION: 28240 (3-WIRE CORD REEL ON VLC CRANES)

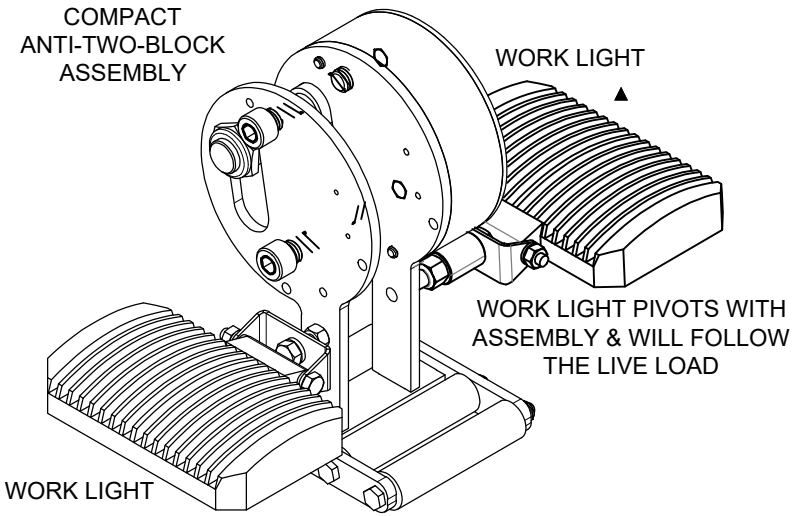


| | BILL OF MATERIALS | N/D | 28240 |
|---|---|---|---|
| # | DESCRIPTION | QTY | PART NUMBER |
| 1 | IDWG; WORK LIGHT INSTALLATION, VLC CRANES | 1 | 28188 |
| ▲ 2 | LED WORK LIGHT | 2 | 27483 |
| 3 | TERMINAL; 16G, FEMALE, QUICK-CONNECT | 5 | !TERM16G250QCFI |
| 4 | TERMINAL; 16G, MALE, QUICK-CONNECT | 4 | !TERM16G250QCM |
| 5 | WIRE ASS'Y; 16G, BLACK, 28", #6 RING - STRIPPED END | 1 | 22254-BLK280AO |
| 6 | WIRE ASS'Y; 16G, BLACK, 28", QCF - STRIPPED END | 1 | 22254-BLK280GO |
| 7 | RELAY; 12VDC | 1 | 22739 |
| 8 | DECAL; WORK LIGHT RELAY | 1 | 16184-2 |
| 9 | WIRE ASS'Y; 16G, BLACK, 30", MALE PIN - QCF | 2 | 22254-BLK300FG |
| ▲ 10 | STANDOFF; .75"OD X .38"ID X 1" LONG, ALUM. (LEFT SIDE MOUNT) | 1 | 24496 |

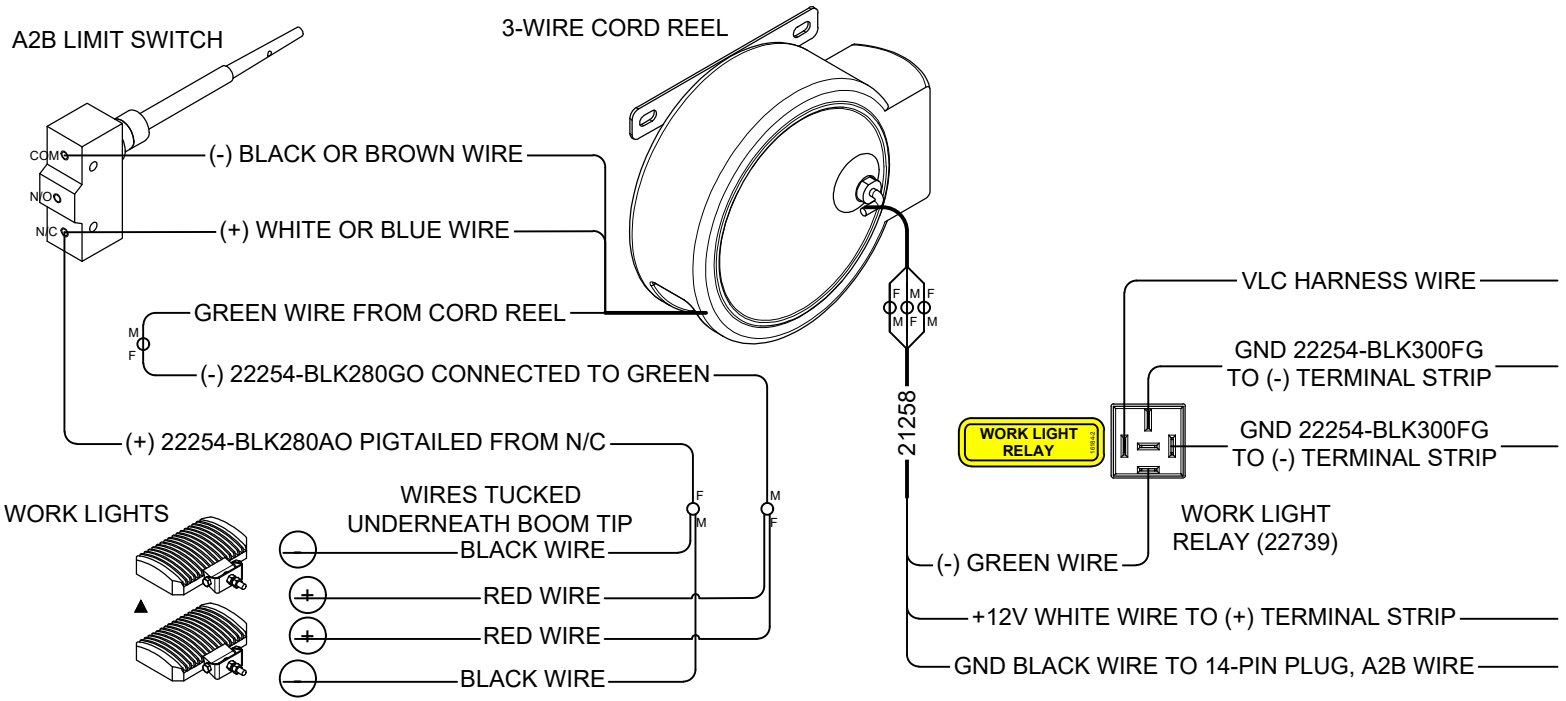


WORK LIGHT ON/OFF
LATCHED
(ON SAME TOGGLE AS HORN)

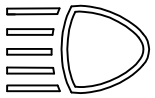

VENTURO®

VENCO VENTURO INDUSTRIES LLC
CINCINNATI, OHIO

| TITLE | DATE | SECTION |
|---|---|---|
| WORK LIGHT INSTALLATION, 3-WIRE CORD REEL | 06-06-26C | C400 |
| VLC CRANES | SUPERSEDES 06-12-24B | 28188 |

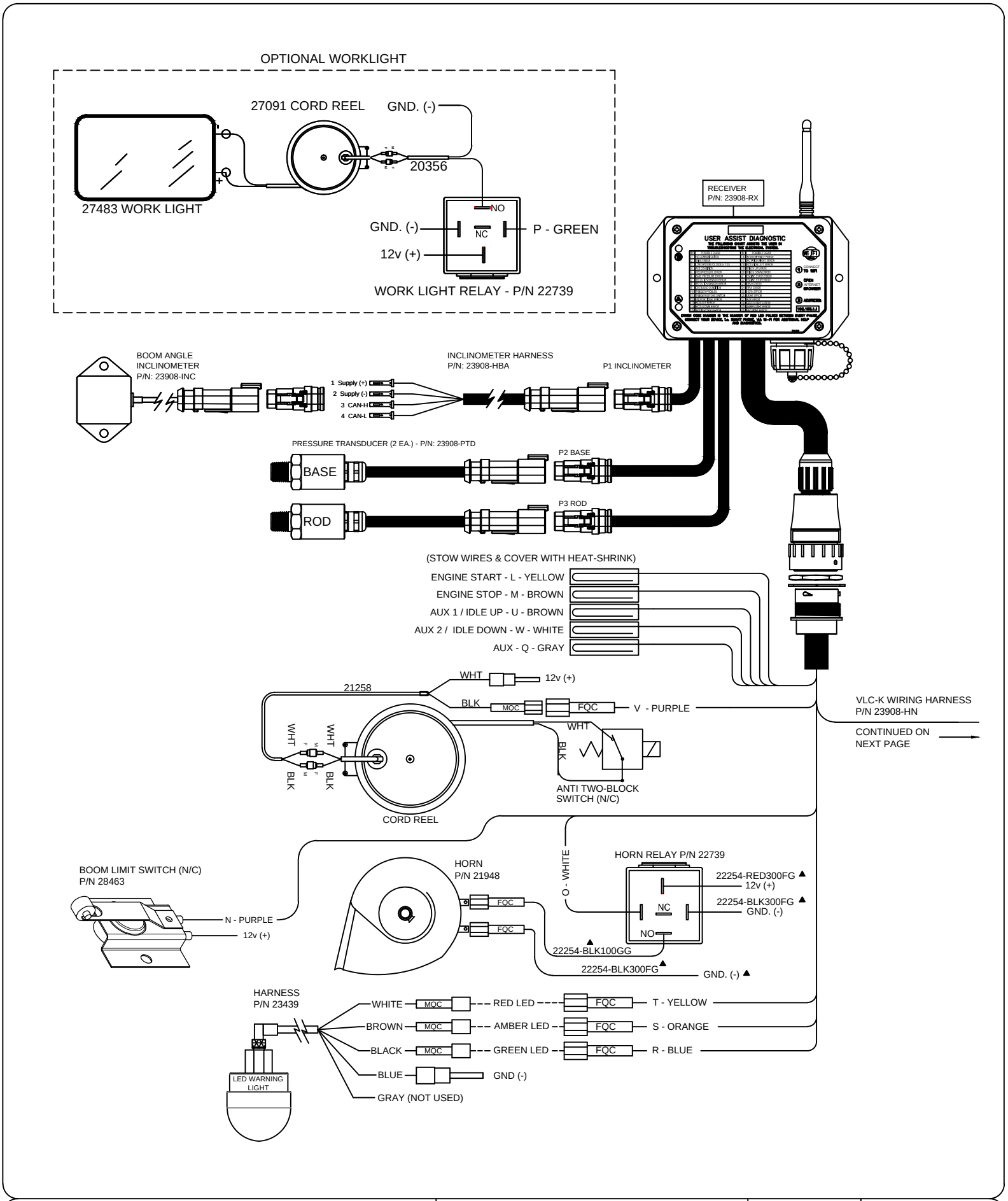


| | | | |
|---|---|---|---|
| VENTURO® VENCO VENTURO INDUSTRIES LLC CINCINNATI, OHIO | TITLE<br>WIRING DIAGRAM - PG. 1 | DATE<br>02-25-25A | SECTION<br>C400 |
| | VLC-K ("ORANGE") SERIES | SUPERSEDES<br>06-17-24 | 26963 |

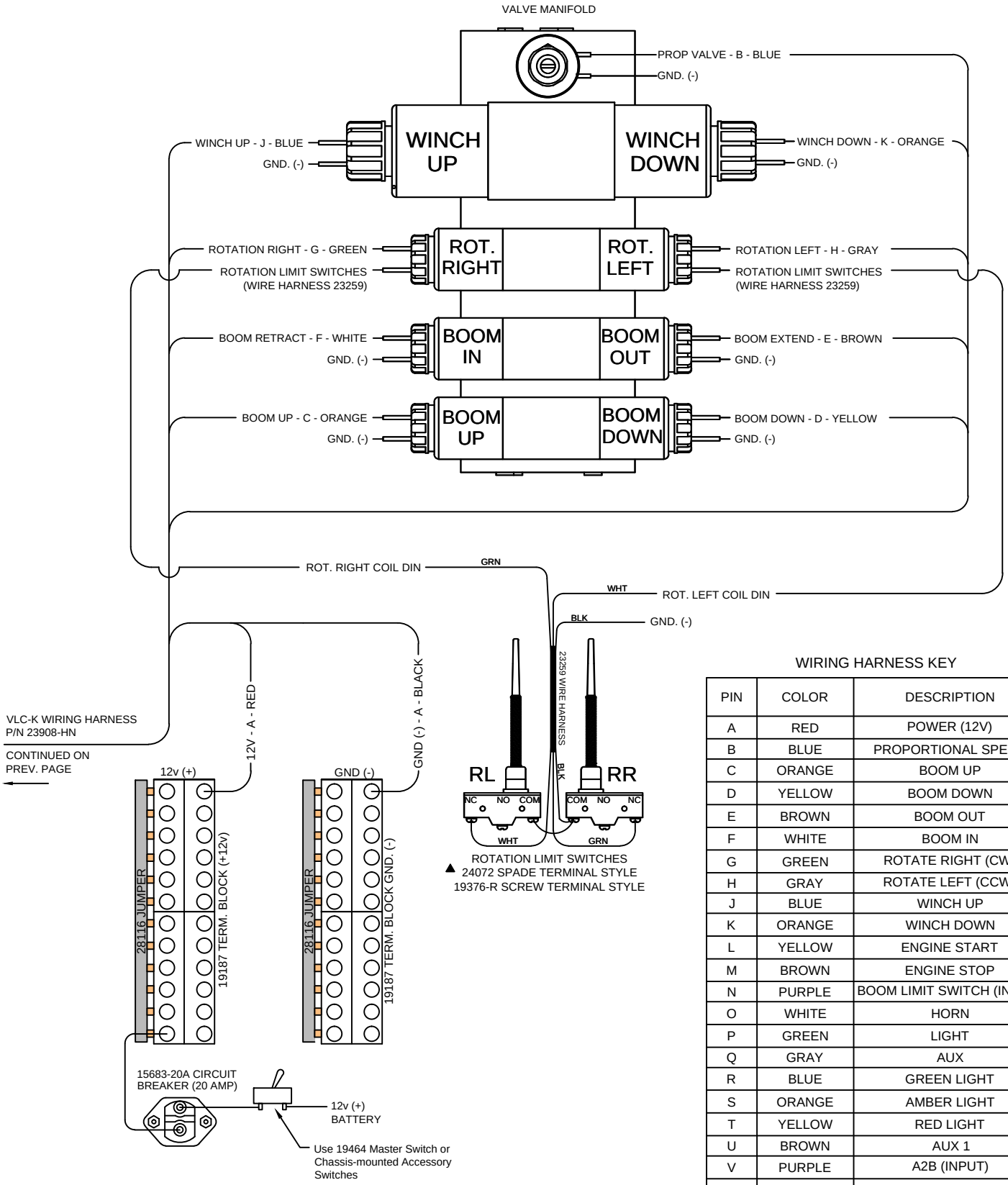


WIRING HARNESS KEY

| PIN | COLOR | DESCRIPTION |
|---|---|---|
| A | RED | POWER (12V) |
| B | BLUE | PROPORTIONAL SPEED |
| C | ORANGE | BOOM UP |
| D | YELLOW | BOOM DOWN |
| E | BROWN | BOOM OUT |
| F | WHITE | BOOM IN |
| G | GREEN | ROTATE RIGHT (CW) |
| H | GRAY | ROTATE LEFT (CCW) |
| J | BLUE | WINCH UP |
| K | ORANGE | WINCH DOWN |
| L | YELLOW | ENGINE START |
| M | BROWN | ENGINE STOP |
| N | PURPLE | BOOM LIMIT SWITCH (INPUT) |
| O | WHITE | HORN |
| P | GREEN | LIGHT |
| Q | GRAY | AUX |
| R | BLUE | GREEN LIGHT |
| S | ORANGE | AMBER LIGHT |
| T | YELLOW | RED LIGHT |
| U | BROWN | AUX 1 |
| V | PURPLE | A2B (INPUT) |
| W | WHITE | AUX 2 |
| X | BLACK | GROUND |

VENTURO®

VENCO VENTURO INDUSTRIES LLC
CINCINNATI, OHIO

| TITLE | DATE | SECTION |
|---|---|---|
| WIRING DIAGRAM - PG. 2 | 09-23-24A | C400 |
| VLC-K ("ORANGE") SERIES | SUPERSEDES 06-17-24 | 26964 |

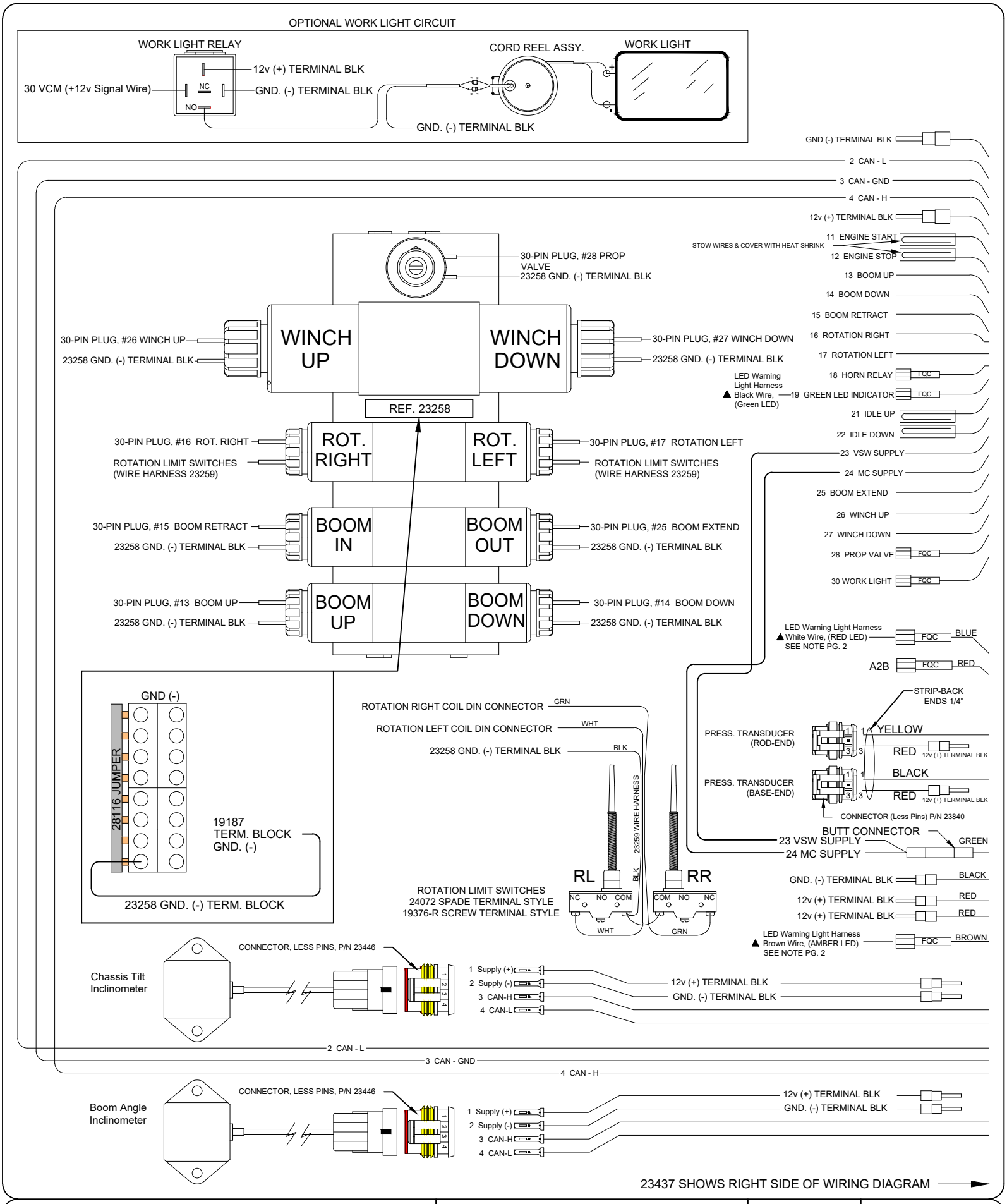


VENTURO®

VENCO VENTURO LLC
CINCINNATI, OHIO

| TITLE | DATE | SECTION |
|---|---|---|
| WIRING DIAGRAM, PG. 1 | 09-24-26L | C400 |
| VLC-H ("RED") SERIES | SUPERSEDES 03-24-26K | 23436 |

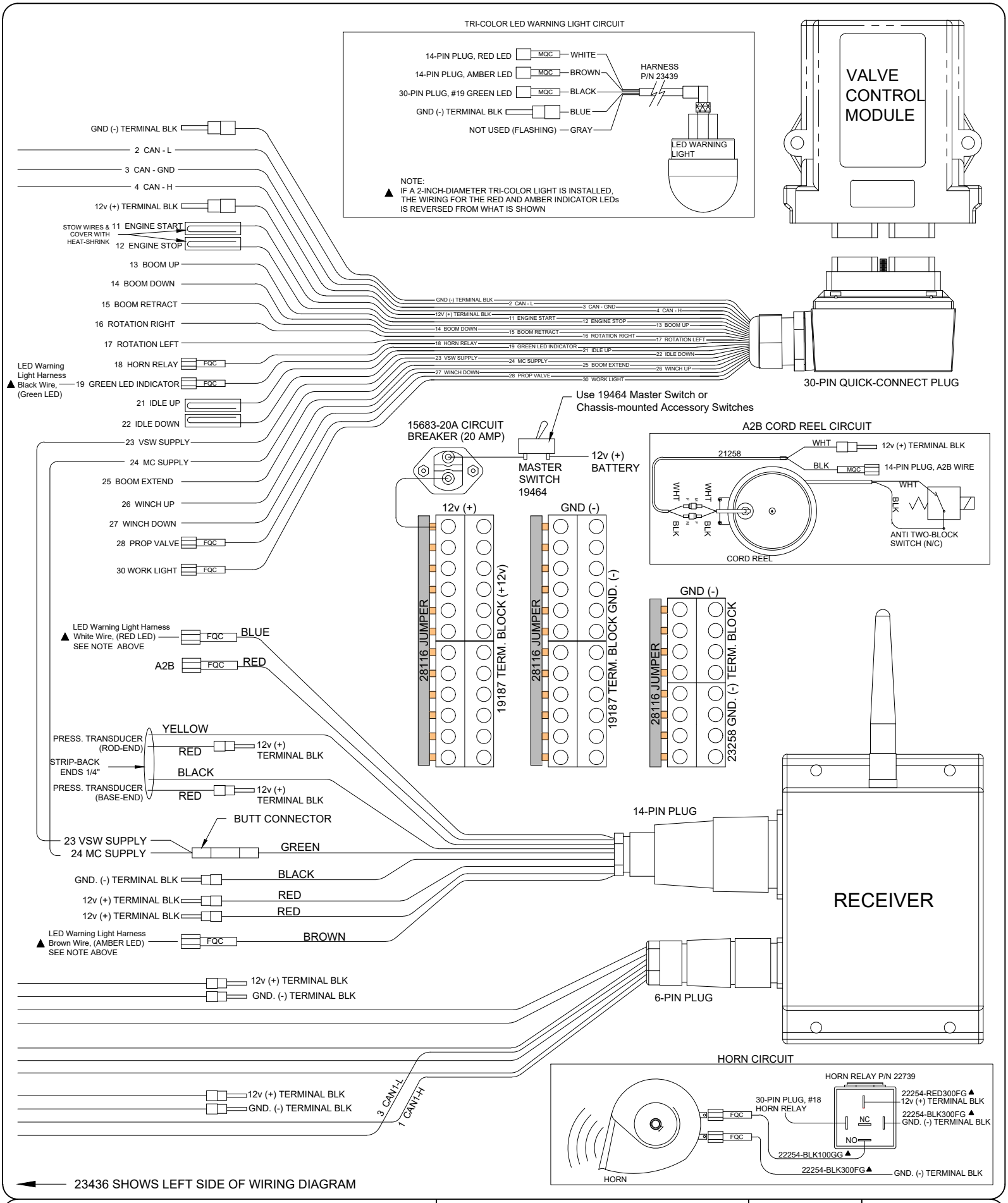


VENTURO®

VENCO VENTURO LLC
CINCINNATI, OHIO

| TITLE | DATE | SECTION |
|---|---|---|
| WIRING DIAGRAM, PG. 2 | 09-23-26Q | C400 |
| VLC-H ("RED") SERIES | SUPERSEDES 02-25-25P | 23437 |

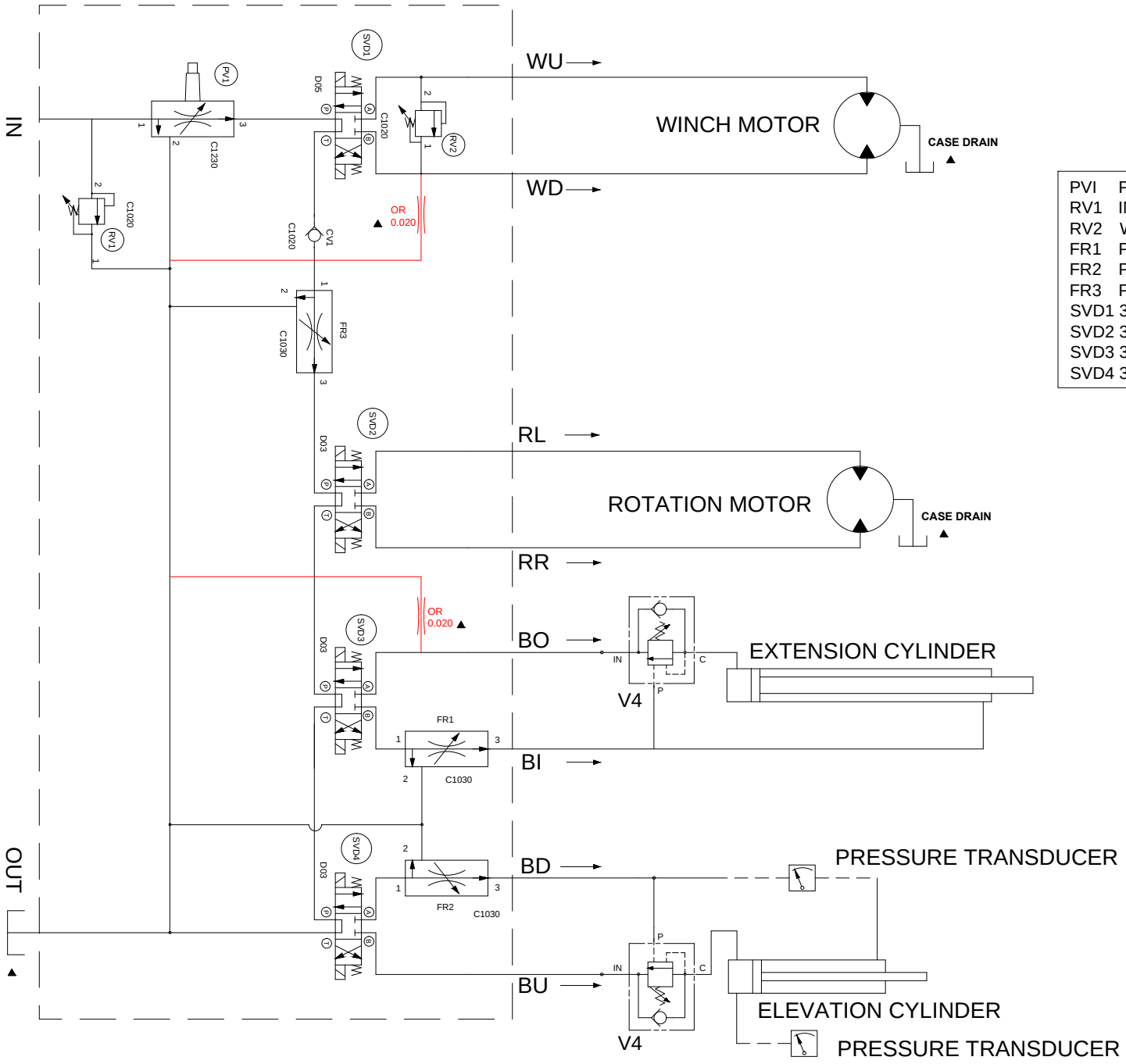


| | |
|---|---|
| PVI | PROPORTIONAL CONTROL VALVE (SIMPLIFIED REP) |
| RV1 | INLET RELIEF VALVE |
| RV2 | WINCH RELIEF VALVE |
| FR1 | PRIORITY FLOW REGULATOR - 2.25 GPM |
| FR2 | PRIORITY FLOW REGULATOR - 4.00 GPM |
| FR3 | PRIORITY FLOW REGULATOR - 7.50 GPM |
| SVD1 | 3 POSITION - 4 WAY VALVE |
| SVD2 | 3 POSITION - 4 WAY VALVE |
| SVD3 | 3 POSITION - 4 WAY VALVE |
| SVD4 | 3 POSITION - 4 WAY VALVE |

VENTURO®

VENCO VENTURO INDUSTRIES LLC
CINCINNATI, OHIO

| TITLE | DATE | SECTION |
|---|---|---|
| HYDRAULIC SYSTEM DIAGRAM | 12-04-23D | C400 |
| HT60/66KX VLC SERIES | SUPERSEDES 11-22-22C | 23822 |

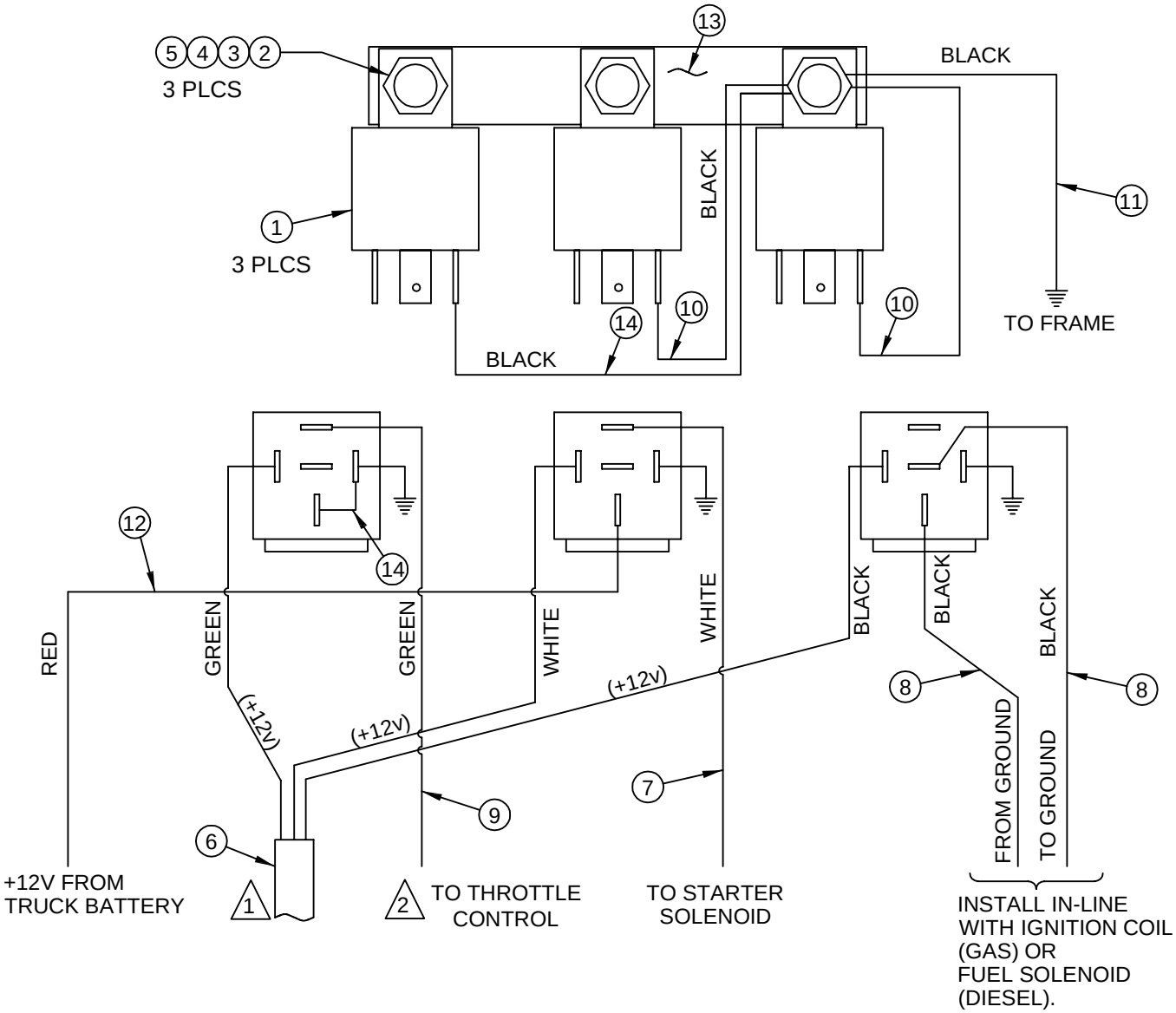


1 USER-CONTROLLED +12V INPUT SIGNALS FROM HETRONIC VLC SYSTEM OR ANALOG PENDANT OR RADIO SYSTEM

2 THROTTLE CONTROL IS DESIGNED TO PROVIDE A GROUND SIGNAL WHEN RELAY IS ACTIVATED

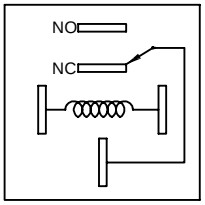


RELAY SCHEMATIC

| ITEM | QTY | PART# | DESCRIPTION |
|---|---|---|---|
| 1 | 3 | 22739 | RELAY |
| 2 | 3 | !PHCS#1024075 | #10-24 X 3/4 PHIL PAN HD BOLT |
| 3 | 3 | !LWSH-#10 | #10 LOCKWASHER |
| 4 | 3 | !FWSH-025 | #10 WASHER |
| 5 | 3 | !HNUT-#1024 | #10 NUT |
| 6 | 1 | 22607 | WIRE HARNESS - 12/3 SJO |
| 7 | 1 | 22609 | WHITE - 16 GAGE ELECTRICAL WIRE - 15 FEET LONG |
| 8 | 2 | 22610 | BLACK - 16 GAGE ELECTRICAL WIRE - 15 FEET LONG |
| 9 | 1 | 22611 | GREEN - 16 GAGE ELECTRICAL WIRE - 15 FEET LONG |
| 10 | 2 | 22612 | BLACK - 16 GAGE ELECTRICAL WIRE - 6 INCHES LONG |
| 11 | 1 | 22613 | BLACK - 16 GAGE ELECTRICAL WIRE - 8 FEET LONG |
| 12 | 1 | 22614 | RED - 14 GAGE ELECTRICAL WIRE - 15 FEET LONG |
| 13 | 1 | 01181 | BUSS BAR |
| 14 | 1 | 22619 | BLACK - 16GA WIRE ASSY - 6" LONG W/ 3 INCH PIGTAIL |

VENTURO®

VENCO VENTURO INDUSTRIES LLC
CINCINNATI, OHIO

| TITLE | DATE | SECTION |
|---|---|---|
| ENGINE START / STOP THROTTLE CONTROL | 06-09-20F | C400 |
| HT CRANES | SUPERSEDES 02-21-14E | 22615 |

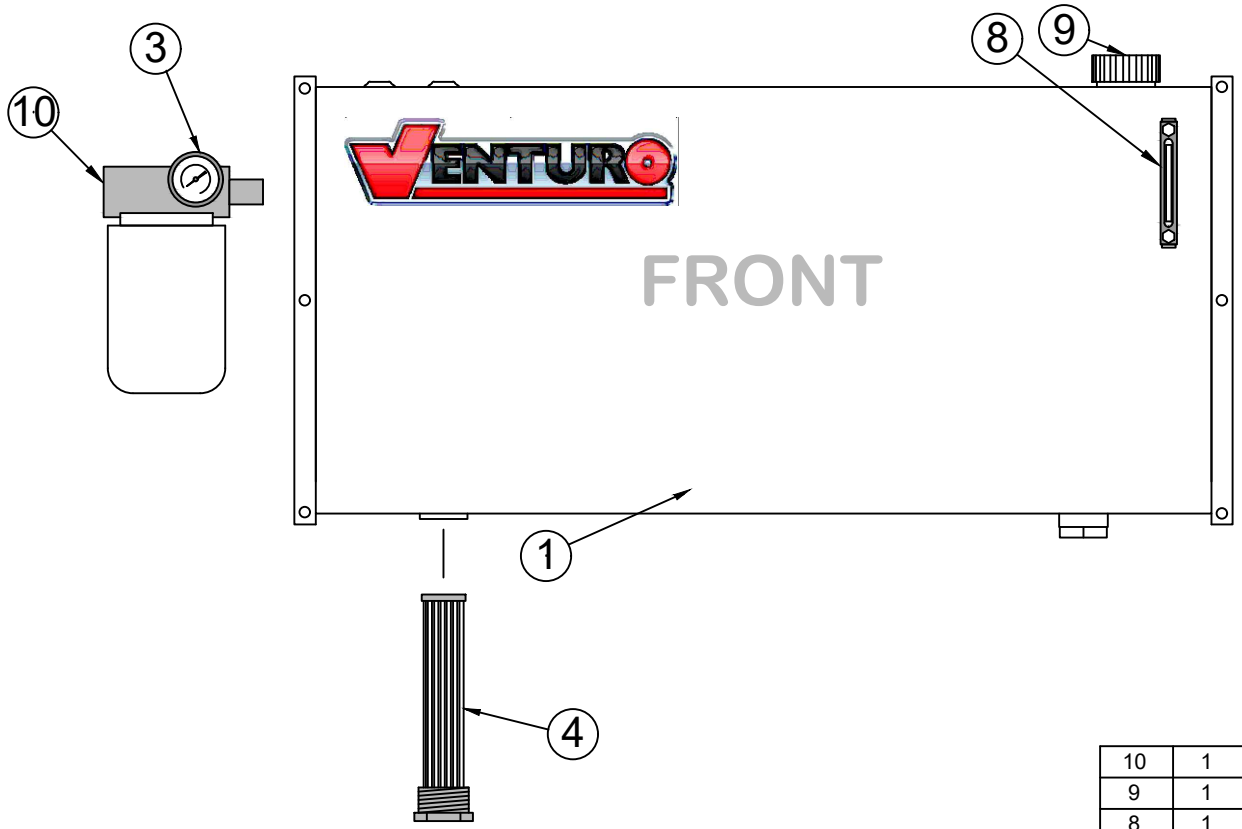


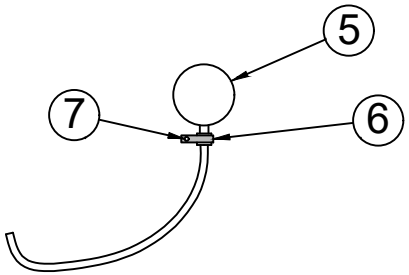


| ITEM | QTY | PART NUMBERS | DESCRIPTION |
|---|---|---|---|
| 10 | 1 | 19298 | FILTER ASSY, RETURN |
| 9 | 1 | 22789 | FILLER / BREATHER CAP ASSEMBLY |
| 8 | 1 | 22787 | SIGHT GLASS |
| 7 | 1 | !HWHS02520075-F | HEX WASHER HEAD 1/4-20 X 3/4 SELF TAPPING |
| 6 | 1 | 19275 | CLAMP |
| 5 | 1 | 22730 | PRESSURE GAUGE ASSEMBLY |
| 4 | 1 | 22788 | SUCTION SCREEN - 100 MESH |
| ▲ 3 | 1 | VT1185 | PRESSURE GAUGE - RETURN |
| 2 | - | - | - |
| * 1 | 1 | 22785 | HYDRAULIC RESERVOIR - 25 GAL (18" x 40" x 8") |
| | | 22998 | HYDRAULIC RESERVOIR - 40 GAL (20" x 42" x 11") |

VENTURO®

VENCO VENTURO INDUSTRIES LLC
CINCINNATI, OHIO

| TITLE | DATE | SECTION |
|---|---|---|
| RESERVOIR KIT REPL PARTS | 04-07-26E | C400 |
| ▲ HT CRANES; 25/40/50 GAL RESERVOIR | SUPERSEDES 12-09-22D | 23224 |

| 12000H VLC CAPACITY DECALS | | |
|---|---|---|
| | RIGHT | LEFT |
| 25' BOOM | 28626-R | 28626-L |
| 30' BOOM | 28625-R | 28625-L |

| 12000H MODEL DECAL | |
|---|---|
| 25' BOOM | 28705 |
| 30' BOOM | 28706 |

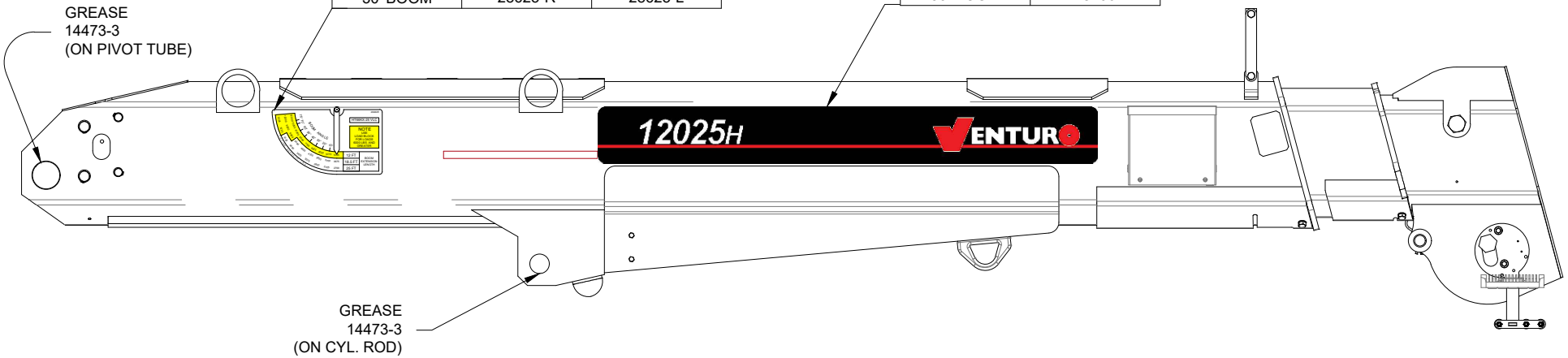


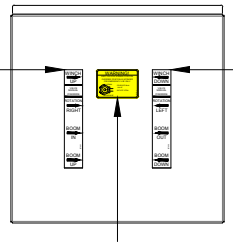


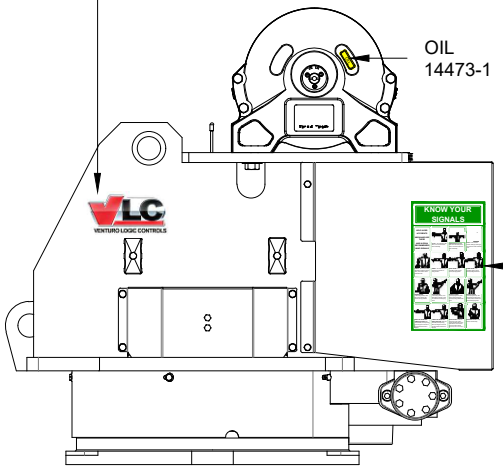


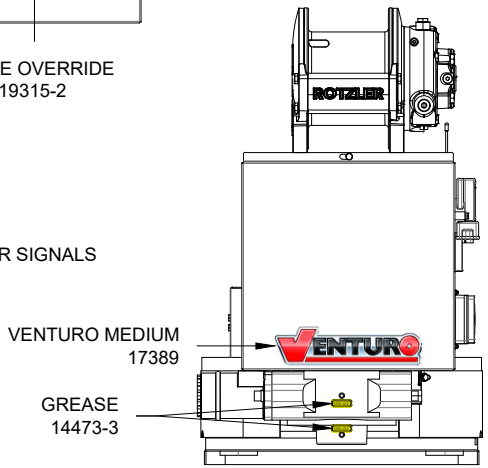


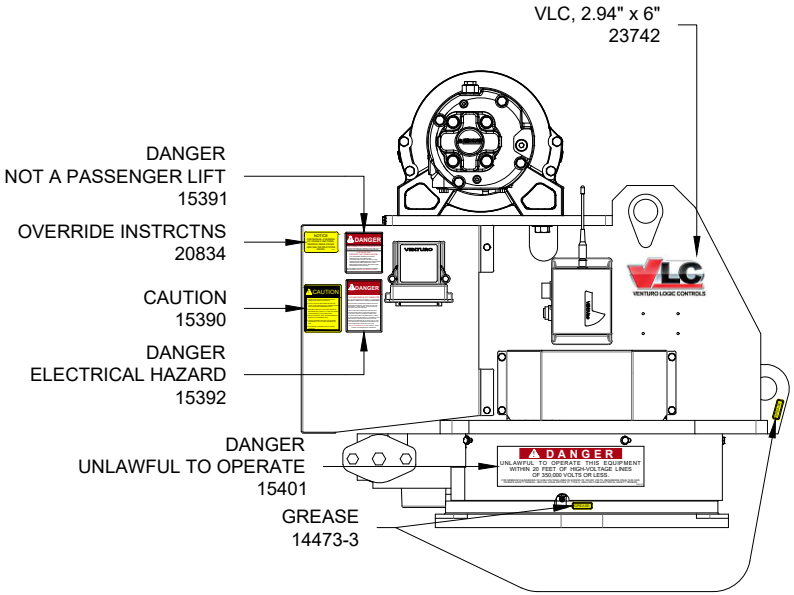


| | | | |
|---|---|---|---|
| VENTURO® VENCO VENTURO INDUSTRIES LLC CINCINNATI, OHIO | TITLE DECAL PLACEMENT | DATE 08-22-25 | SECTION C400 |
| | 12025H/12030H | SUPERSEDES - | 28622 |

# 28498 FIELD SERVICE LABEL KIT

| -25 | -30 | 28498 FIELD SERVICE LABEL KIT | |
|---|---|---|---|
| QTY | | PART # | DESCRIPTION |
| 1 | 1 | 16184-1 | DECAL; HORN RELAY |
| 1 | 1 | 16184-2 | DECAL; WORK LIGHT RELAY |
| 2 | - | 28705 | DECAL; 12025H W/ VENTURO LOGO |
| - | 2 | 28706 | DECAL; 12030H W/ VENTURO LOGO |
| 1 | 1 | 17389 | DECAL; VENTURO LOGO, MEDIUM |
| 1 | - | 28626-R | DECAL; BOOM CAPACITY, RIGHT (12025H) |
| 1 | - | 28626-L | DECAL; BOOM CAPACITY, LEFT (12025H) |
| - | 1 | 28625-R | DECAL; BOOM CAPACITY, RIGHT (12030H) |
| - | 1 | 28625-L | DECAL; BOOM CAPACITY, LEFT (12030H) |
| 1 | 1 | 14473-1 | DECAL; OIL |
| 6 | 6 | 14473-3 | DECAL; GREASE |
| 1 | 1 | 17813 | DECAL; OVERLOAD SENSING SYSTEM |
| 1 | 1 | 22499 | DECAL; KNOW YOUR SIGNALS |
| 1 | 1 | 20834 | DECAL; MANUAL OVERRIDE, INSTRUCTIONS |
| 1 | 1 | 19315-2 | DECAL; MANUAL OVERRIDE, SHUTOFF, PROPORTIONAL |
| 1 | 1 | 22768-1 | DECAL; MANUAL OVERRIDE, HT PROPORTIONAL, LEFT |
| 1 | 1 | 22768-2 | DECAL; MANUAL OVERRIDE, HT PROPORTIONAL, RIGHT |
| 2 | 2 | 23742 | DECAL; VLC, 2.94" x 6.00" |
| 1 | 1 | 28497 | IDWG; FIELD SERVICE LABEL KIT, 120**H VLC SERIES |
| 1 | 1 | 28502 | IDWG; DECAL PLACEMENT, 120**H VLC SERIES |
| 1 | 1 | INST-23233 | SAFETY MANUAL; VENTURO CRANES |
| 1 | 1 | 15397 | KIT; ACCIDENT PREVENTION SIGNS |
| 2 | 2 | 27007-18a | DECAL; LOAD BLOCK CAPACITY |

# USER NOTES

# VENTURO CRANES LIMITED WARRANTY POLICY

**Venturo products are built to last…we guarantee them.**
**As a purchaser of any new Venturo product covered by warranty, you will receive 1 year of the most complete coverage available…and, at no added cost to you.**

## 1-Year Limited Warranty Policy

This limited policy warrants new products of Venturo to be free from defects in material and workmanship for a period of one (1) year from date of original installation. OEM products or accessories purchased by Venturo as part of or offered with our product will carry the OEM manufacturer's respective warranty. Our warranty covers:

- ***Repair or replacement of product***
- ***Labor to repair or replace product***
- ***Freight to return and/or replace product***

We shall not be liable for any contingent liabilities arising out of the improper function of any products. Warranty shall become void if the product is improperly installed, modified, damaged, abused or used for application other than intended use. There is no warranty of merchantability, fitness for a particular purpose, warranty arising from course of dealing or usage of trade, or any other implied or expressed warranty, except as made specifically herein. This warranty supersedes all previous warranties, written or implied.

## Warranty Claims

Venco Venturo Industries LLC will make a good faith effort for prompt correction or other adjustment with respect to any product, which proves to be defective after our inspection and within the warranty period. Before any repairs are attempted or before returning any product, your Venturo Distributor is required to obtain a warranty claim number. This number is necessary for any claim to be considered. To obtain a warranty claim number, Venturo requires the model and serial number. Only authorized Venturo Distributors can perform warranty. For the name and address of your local Venturo Distributor call the **Warranty Claim Department - 513-772-8448.**

**WARNING** - It is the responsibility of the installer to ensure the installation is completed according to the manufacturer's recommendations, ensure the ultimate user understands how to operate product in a safe manner, and understands the need for regular service and maintenance by an authorized Venturo Distributor. No modifications or alterations may be made to any Venturo product without the expressed written consent of Venco Venturo Industries LLC. Installation of any Venturo product must be done by an authorized Venturo Distributor, to the standards of the industry; including maintenance, service and affixing of all instruction, safety and warning decals. Users should be instructed as to the safe operation at time of delivery. Maintenance, service, operation and safety warning decals are available on request from Venco Venturo Industries LLC.

**VENCO VENTURO INDUSTRIES LLC**
12110 BEST PLACE | CINCINNATI, OHIO 45241
P: 800-226-2238 | F: 513-326-5427
www.venturo.com