E3

INST-28930

OWNER'S MANUAL

*EGAA*D-*0*0*

PARTS & INSTALLATION MANUAL

3516E/3515E

Included in this manual:

3516E

- 3,500 lbs Electric Telescopic Service Crane
- 9 – 16 ft Powered, Single-Stage, Boom Extension
- Proportional Controls

3515E

- 3,500 lbs Electric Telescopic Service Crane
- 7 – 11 ft Powered, Single-Stage, Boom Extension
- 11 – 15 ft Manual Pullout Boom Extension
- Non-Proportional Controls

VENCO VENTURO INDUSTRIES LLC
12110 BEST PLACE | CINCINNATI, OHIO 45241
800-226-2238

This manual also available online at www.venturo.com.

7607100A	DESCRIPTION & SPECIFICATIONS
25950	SPECIFICATIONS & OPERATING FEATURES
25951	SPECIFICATIONS & OPERATING FEATURES
28931	INSTALLATION DIMENSIONS
28960	INSTALLATION DIMENSIONS
28814	BASE MOUNTING DIMENSIONS
28932	CAPACITY CHART
28961	CAPACITY CHART
7607150A	SAFETY
850711	SAFETY & HAZARDS - GENERAL, 1/2
850712	SAFETY & HAZARDS - GENERAL, 2/2
15394	VEHICLE & CRANE ELECTRIC HAZARD INFORMATION
21353	SAFETY DECALS
21384	SAFETY DECALS
21354	DECALS FOR ET CRANES
28937	MODEL & CAPACITY DECALS 3516E/3515E
28819	ADDITIONAL DECALS
7607200A	INSTALLATION
28933	TYPICAL REINFORCEMENT FOR MOUNTING CRANE ON TOP OF SERVICE BODY
28820	CABLE & BATTERY REQUIREMENTS - ET & HT CRANES
28821	CABLE & BATTERY INSTALLATION DRAWING
20906-3516E	STABILITY TESTING 3516E
20906-3515E	STABILITY TESTING 3515E
20907	STABILITY CHART
28822	WIRE ROPE INSTALLATION
28855	WORK LIGHT INSTALLATION INSTRUCTIONS; COMPACT A2B MOUNT
7607300B	OPERATION & MAINTENANCE
28852	OPERATION & MAINTENANCE INSTRUCTIONS (1 OF 3)
28853	OPERATION & MAINTENANCE INSTRUCTIONS (2 OF 3)
28854	OPERATION & MAINTENANCE INSTRUCTIONS (3 OF 3)
28826	MANUAL OVERRIDE INSTRUCTIONS, NON-PROPORTIONAL
28827	MANUAL OVERRIDE INSTRUCTIONS, PROPORTIONAL
28823	LUBRICATION & MAINTENANCE CHART
28824	MINIMUM VOLTAGE TEST
28239	A2B STOWAGE CUT-OUT
7607400A	REPLACEMENT PARTS
28951	REPLACEMENT PARTS DRAWING, MECH
28952	REPLACEMENT PARTS LIST, MECH
28953	REPLACEMENT HARDWARE DRAWING, MECH
28954	REPLACEMENT HARDWARE LIST, MECH
28943	REPLACEMENT PARTS DRAWING; BOOM 28673
28944	REPLACEMENT PARTS LIST; BOOM 28673
28962	REPLACEMENT PARTS DRAWING; BOOM 28684
28963	REPLACEMENT PARTS LIST; BOOM 28684
28861	REPLACEMENT PARTS LIST/DWG; A2B (28860-1)
26942	COMPACT A2B REPLACEMENT PARTS
28946	REPLACEMENT PARTS LIST; LOAD BLOCK 20670
28835	28700 ELECTRICAL COMPONENT ASSY
28836	WIRING DIAGRAM, 45**E/40**E/351*E/3215E, NON PROP
28837	WIRING DIAGRAM, 45**E/40**E/351*E/3215E, PROPORTIONAL
28843	REPLACEMENT PARTS DRAWING, 16780, 2-POLE SLIP-RING
28842	REPLACEMENT PARTS LIST, 16780, 2-POLE SLIP-RING
28840	REPLACEMENT PARTS DRAWING / LIST; 21990 PENDANT (NON-PROP, CORDED)
23529	REPLACEMENT PARTS DRAWING / LIST; 21986-ET (NON-PROP, RADIO)
35310	REPLACEMENT PARTS DRAWING / LIST; 34470-ET (NON-PROP, RADIO, KARTECH)
28841	REPLACEMENT PARTS DRAWING / LIST; 21988 PENDANT (PROP, CORDED)
23786	REPLACEMENT PARTS DRAWING / LIST; 22158 (PROP, RADIO)
35320	REPLACEMENT PARTS DRAWING / LIST; 24471 (PROP, RADIO, KARTECH)
28838	HYDRAULIC SYSTEM COMPONENTS REPLACEMENT PARTS DRAWING
28980	HYDRAULIC SYSTEM COMPONENTS REPLACEMENT PARTS DRAWING
28808	HYDRAULIC VALVE ASSY REPLACEMENT PARTS DRAWING / LIST
28964	HYDRAULIC SYSTEM SCHEMATIC (NON PROPORTIONAL)
28945	HYDRAULIC SYSTEM SCHEMATIC (PROPORTIONAL)
28928	21556 WINCH REPLACEMENT PARTS DRAWING & LIST
28847	21735-1 SLEWING REPLACEMENT PARTS
28848	28720 HYDRAULIC POWER UNIT REPLACEMENT PARTS
28947	DECAL PLACEMENT 3516E
28965	DECAL PLACEMENT 3215E/3515E
28949	FIELD SERVICE LABEL KIT; 3516E
28967	FIELD SERVICE LABEL KIT; 3515E
12-00073_VNT1	WARRANTY PAGE

SECTION 100

DESCRIPTION

&

SPECIFICATIONS

VENCO VENTURO INDUSTRIES LLC
CINCINNATI, OHIO

SPECIFICATIONS

12-volt battery operated

12,000 ft-lb overturning moment (or as limited by truck stability)

Moment overload shut-off system

Electric winch - 1,750 lb single-line capacity with automatic load brake

Electric-hydraulic boom elevation

Electric-hydraulic boom extension - 7 ft stroke

Electric-hydraulic continuous power rotation

Corded remote control pendant

Radio remote control pendant (optional)

Master disconnect switch

Accessories (optional):

Stabilizers: 18500, 13500, 11822-2

Pedestal: 26027

Boom Rest: 21440

TELESCOPIC BOOM	9 - 16 ft
BOOM ELEVATION	-5° TO 75°
BOOM HYD EXTENSION	7 ft
BOOM MANUAL EXT	-
CAPACITY	750 lb @ 16 ft
	3500 lb @ 3 ft
WIRE ROPE	1/4" x 65 ft
PENDANT CORD LENGTH	25 ft

SPECIFICATIONS

12-volt battery operated

12,000 ft-lb overturning moment (or as limited by truck stability)

Moment overload shut-off system

Electric winch - 1,750 lb single-line capacity with automatic load brake

Electric-hydraulic boom elevation

Electric-hydraulic boom extension - 4 ft stroke

Electric-hydraulic continuous power rotation

Corded remote control pendant

Radio remote control pendant (optional)

Master disconnect switch

Accessories (optional):

- Stabilizers: 18500, 13500, 11822-2
- Pedestal: 26027
- Boom Rest: 21440

TELESCOPIC BOOM	7 - 15 ft
BOOM ELEVATION	-5° TO 75°
BOOM HYD EXTENSION	4 ft
BOOM MANUAL EXT	4 ft
CAPACITY	800 lb @ 15 ft
	3500 lb @ 3 ft
WIRE ROPE	1/4" x 65 ft
PENDANT CORD LENGTH	25 ft

INSTALLATION DIMENSIONS; 3516E

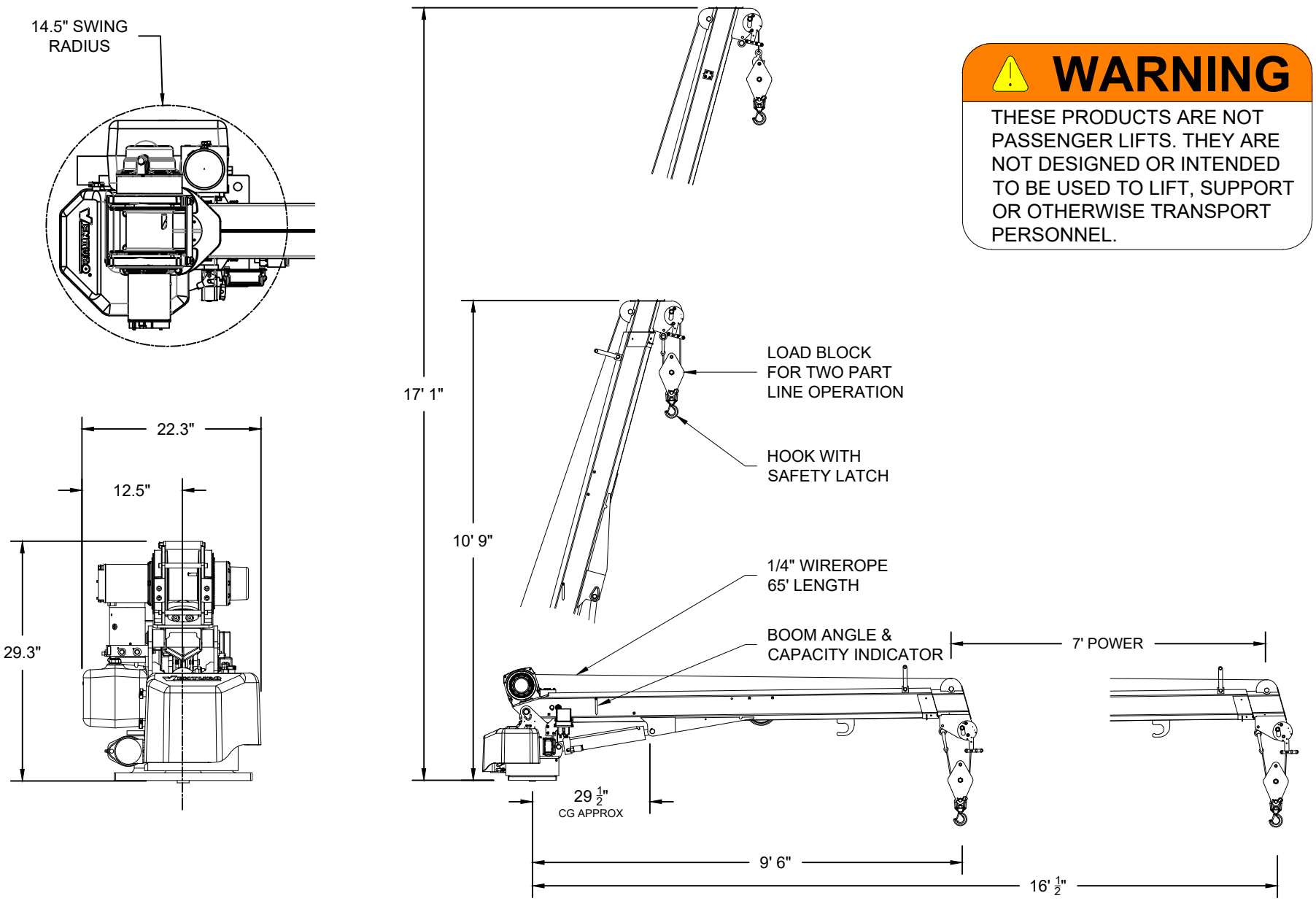

⚠ WARNING

THESE PRODUCTS ARE NOT PASSENGER LIFTS. THEY ARE NOT DESIGNED OR INTENDED TO BE USED TO LIFT, SUPPORT OR OTHERWISE TRANSPORT PERSONNEL.

VENTURO®

VENCO VENTURO INDUSTRIES LLC
CINCINNATI, OHIO

TITLE	DATE	SECTION
INSTALLATION DIMENSIONS	01-02-26A	C100
3516E	SUPERSEDES 09-09-24	28931

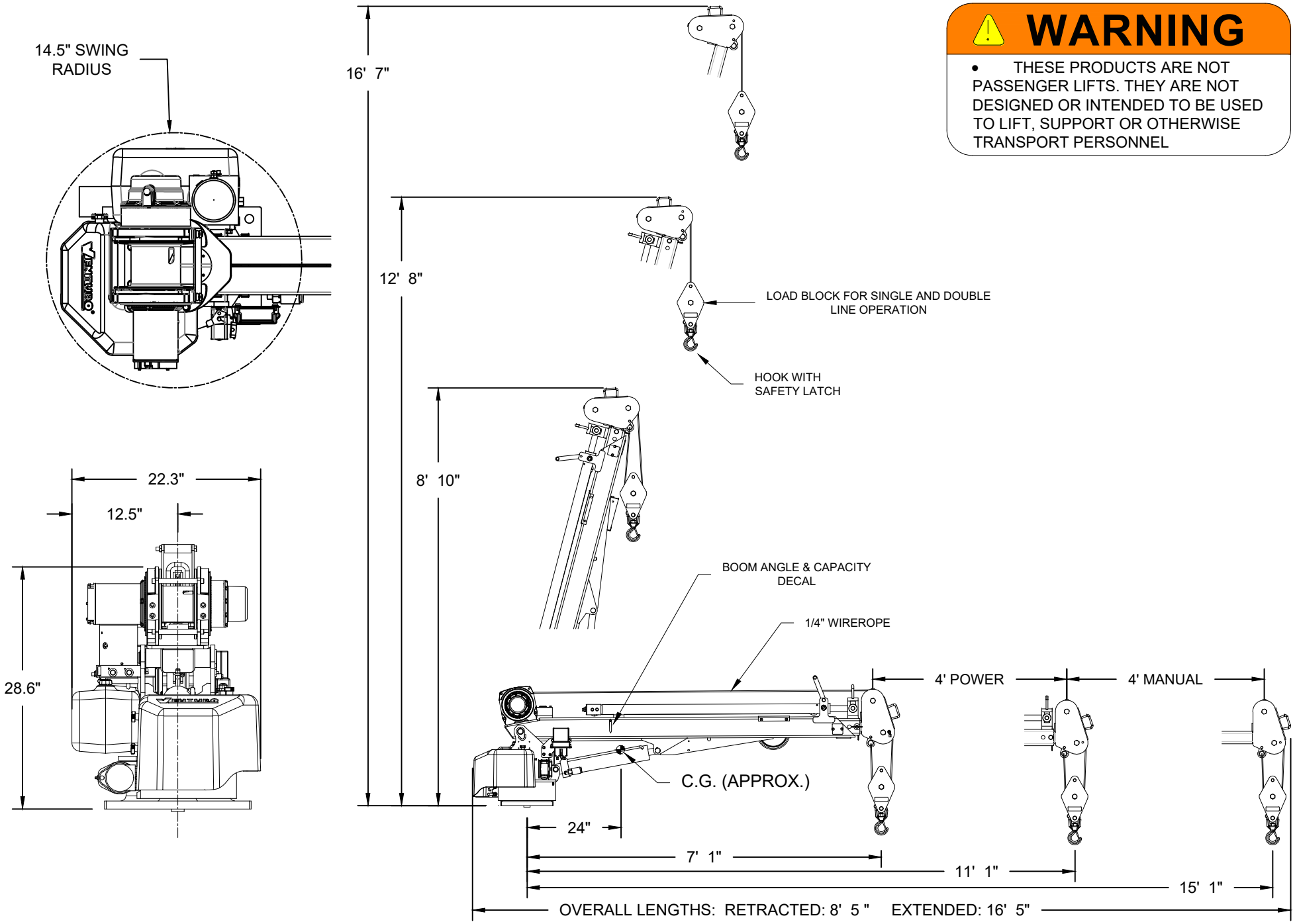

WARNING

- THESE PRODUCTS ARE NOT PASSENGER LIFTS. THEY ARE NOT DESIGNED OR INTENDED TO BE USED TO LIFT, SUPPORT OR OTHERWISE TRANSPORT PERSONNEL

VENTURO®

VENCO VENTURO INDUSTRIES LLC
CINCINNATI, OHIO

TITLE	DATE	SECTION
INSTALLATION DIMENSIONS	10-02-24	C100
3215E/3515E	SUPERSEDES -	28960

21735-WRB/CRB - RECTANGULAR

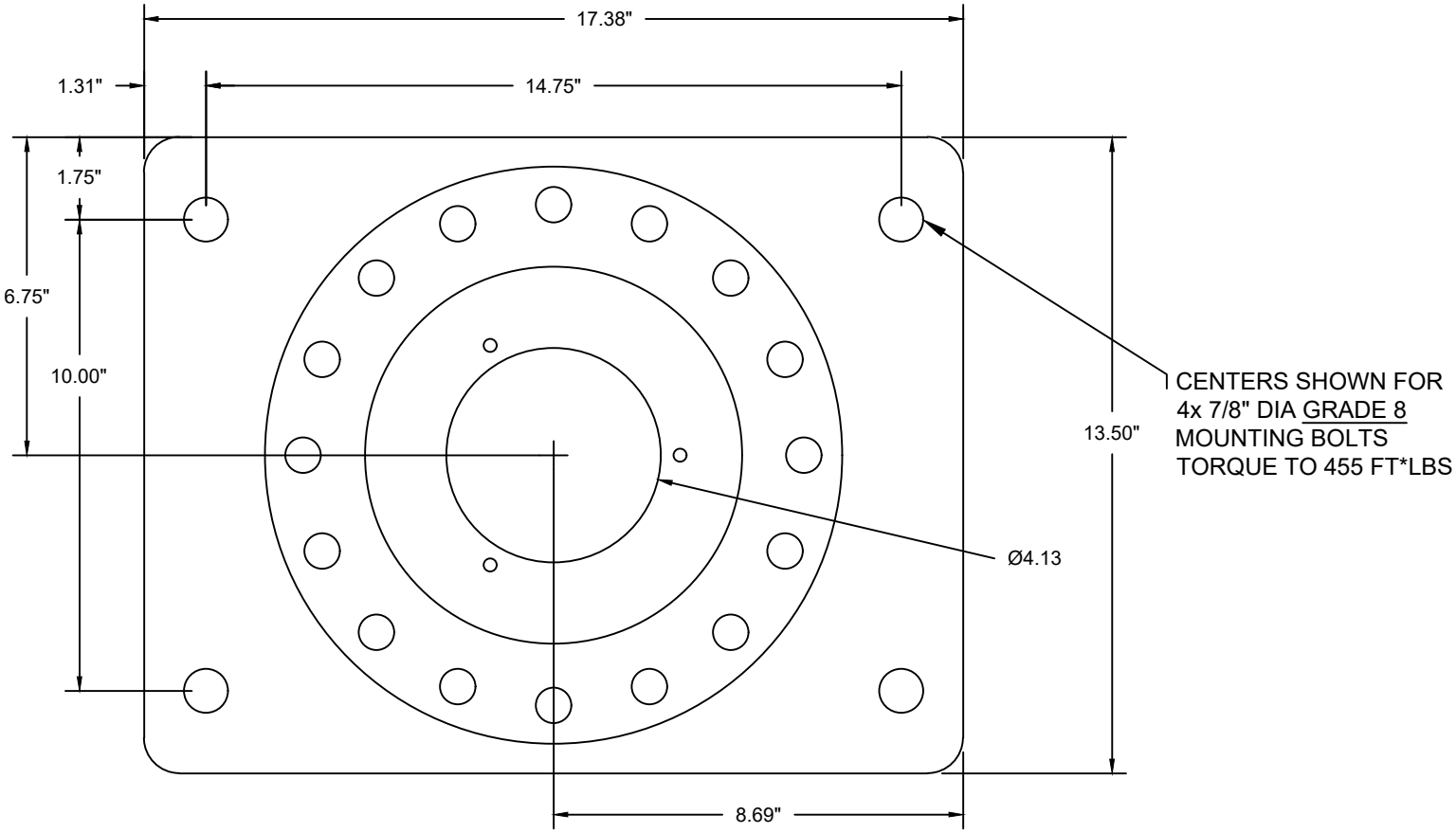

VENTURO® VENCO VENTURO INDUSTRIES LLC CINCINNATI, OHIO	TITLE 21735 BASE MOUNTING DIMENSIONS	DATE 11-12-24A	SECTION C100
	3215E/351*E/40**E/45**E	SUPERSEDES 04-05-24	28814

3516E

CRANE SERIAL NUMBER: _____

MAXIMUM LOAD CAPACITY CHART

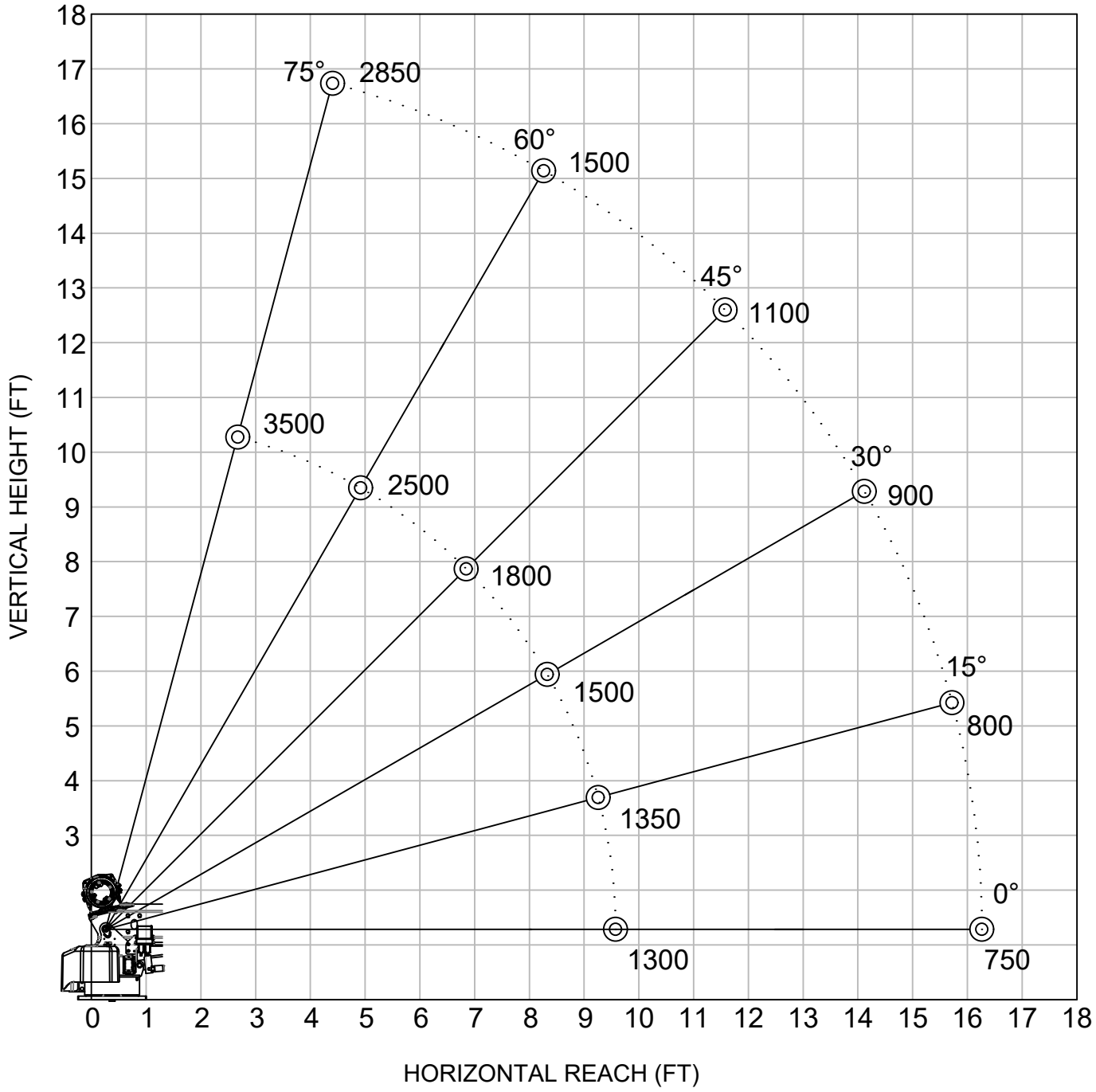

WEIGHT OF LOAD HANDLING DEVICES ARE PART OF THE LOAD AND MUST BE DEDUCTED FROM THE GROSS CAPACITY.

LOAD BLOCK USAGE

1 PART LINE FOR LOADS LESS THAN 1750 LBS

2 PART LINE FOR LOADS OF 1750 LBS AND GREATER

WEIGHT OF LOAD BLOCK = 24 LBS

VENTURO® VENCO VENTURO INDUSTRIES LLC CINCINNATI, OHIO	TITLE MAXIMUM LOAD CAPACITY	DATE 09-10-24	SECTION C100
	3516E	SUPERSEDES -	28932

3515E

CRANE SERIAL NUMBER: _____

MAXIMUM LOAD CAPACITY CHART

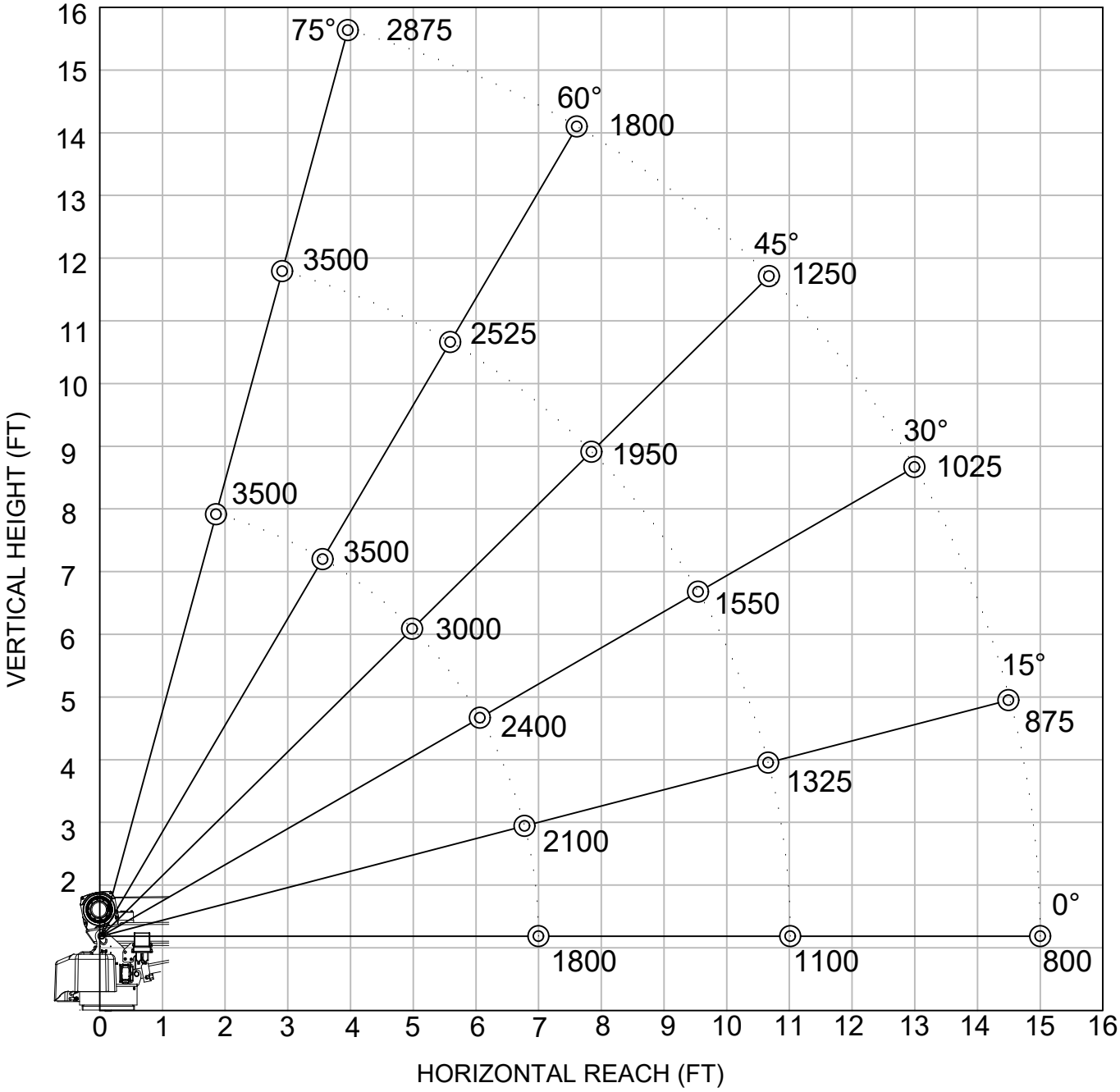

WEIGHT OF LOAD HANDLING DEVICES ARE PART OF THE LOAD AND MUST BE DEDUCTED FROM THE GROSS CAPACITY.

LOAD BLOCK USAGE

1 PART LINE FOR LOADS LESS THAN 1750 LBS

2 PART LINE FOR LOADS OF 1750 LBS AND GREATER

WEIGHT OF LOAD BLOCK = 24 LBS

SECTION 150

SAFETY

VENCO VENTURO INDUSTRIES LLC
CINCINNATI, OHIO

7607150A

CRANE SAFETY AND HAZARDS

CAUTIONS

1. INSPECT VEHICLE AND CRANE, INCLUDING OPERATION, PRIOR TO USE DAILY.
2. DO NOT USE THIS EQUIPMENT EXCEPT ON FIRM LEVEL GROUND WITH CRANE MOUNTED ON FACTORY-RECOMMENDED TRUCK.
3. BEFORE OPERATING THE CRANE, REFER TO MAXIMUM LOAD (CAPACITY) CHART ON CRANE FOR OPERATING (LOAD) LIMITATIONS.
4. DO NOT OPERATE, WALK, OR STAND BENEATH BOOM OR A SUSPENDED LOAD.
5. ATTACH PENDANT CORD SUPPORT SNAP TO ATTACHMENT POINT BEFORE PLUGGING IN PENDANT, IF SO EQUIPPED.
6. UNPLUG PENDANT AND SHUT OFF MASTER DISCONNECT SWITCH WHEN CRANE IS NOT IN USE.
7. FOR TRAVEL, BOOM MUST BE IN STOWED POSITION.

DANGER

- THIS CRANE IS NOT A PASSENGER LIFT
- IT IS NOT DESIGNED OR INTENDED TO BE USED TO LIFT, SUPPORT, OR OTHERWISE TRANSPORT PERSONNEL.

YOU MUST NOT OPERATE THIS CRANE, UNLESS:

1. YOU HAVE BEEN TRAINED IN THE SAFE OPERATION OF THIS CRANE, AND
2. YOU KNOW AND FOLLOW THE SAFETY AND OPERATING RECOMMENDATIONSCONTAINED IN THE MANUFACTURER'S MANUALS, YOUR EMPLOYER'S WORK RULES, AND APPLICABLE GOVERNMENT REGULATIONS. AN UNTRAINED OPERATOR SUBJECTS HIMSELF AND OTHERS TO DEATH OR SERIOUS INJURY.

ELECTROCUTION HAZARD

- THIS MACHINE IS NOT INSULATED.
- MAINTAIN SAFE CLEARANCES FROM ELECTRICAL LINES AND APPARATUSES.
- YOU MUST ALLOW FOR BOOM SWAY, ROCK, OR SAG, AND ELECTRICAL LINE AND LOAD-LINE SWAYING
- THIS LIFTING DEVICE DOES NOT PROVIDE PROTECTION FROM CONTACT WITH OR PROXIMITY TO AN ELECTRICALLY CHARGED CONDUCTOR.
- YOU MUST MAINTAIN A CLEARANCE OF AT LEAST 10 FEET BETWEEN ANY PART OF THE CRANE, LOAD-LINE, OR LOAD, AND ANY ELECTRICAL LINE OR APPARATUS CARRYING UP TO 50,000 VOLTS. REFER TO DRAWING 15394 FOR ADDITIONAL INFORMATION.
- **DEATH OR SERIOUS INJURY** WILL RESULT FROM CONTACT OR INADEQUATE CLEARANCES.

OVERLOAD SENSING SYSTEM - STANDARD ON ALL CRANES

1. IF OVERLOADED, THE WINCH UP, BOOM DOWN, AND (OPTIONAL) BOOM OUT FUNCTIONS WILL AUTOMATICALLY, SHUT OFF TO PREVENT INCREASED OVERLOAD.
2. ON CRANES EQUIPPED WITH AN OPTIONAL OVERLOAD ALARM, IT WILL ALSO SOUND.
3. IF AN OVERLOAD OCCURS, USE THE WINCH DOWN, BOOM UP OR BOOM IN FUNCTIONS TO RELIEVE THE OVERLOAD.
4. THE OVERLOAD SENSING SYSTEM IS INOPERATIVE IF THE BOOM ELEVATION IS AT THE BOTTOM OR TOP LIMIT OF TRAVEL. TO RELIEVE THIS CONDITION, RAISE OR LOWER THE BOOM SLIGHTLY BEFORE LIFTING THE LOAD.
5. SEE MANUAL FOR TESTING THE OVERLOAD SYSTEM.

NOTICE - WARRANTY VOID IF DISCONNECTED
THE OVERLOAD SENSING SYSTEM HAS BEEN INSTALLED AS A SAFETY FEATURE TO PROTECT THE EQUIPMENT AND THE OPERATOR.

DO NOT DISCONNECT THIS SYSTEM

CRANE SAFETY AND HAZARDS - CONT'D

OVERLOAD ALARM SYSTEM - OPTIONAL

1. OVERLOAD ALARM HORN SOUNDS IF RATED LOAD IS EXCEEDED AT ANY REACH.

2. IF ALARM SOUNDS, RAISE BOOM OR LOWER WINCH TO REMOVE OVERLOAD.

3. ALWAYS RAISE BOOM SLIGHTLY BEFORE LIFTING LOAD. WARNING SYSTEM INOPERATIVE WHEN CYLINDER IS COMPLETED BOTTOMED.

4. ALARM CAN BE TESTED BY TYING DOWN BOOM WITH WINCH CABLE AND OPERATING BOOM UP OR BY RAISING BOOM AGAINST UP LIMIT STOP.

NOTICE - WARRANTY VOID IF DISCONNECTED

THIS ALARM SYSTEM HAS BEEN INSTALLED AS A SAFETY FEATURE TO PROTECT BOTH THE EQUIPMENT AND THE OPERATOR.

DO NOT DISCONNECT THIS SYSTEM

INTENTIONALLY LEFT BLANK

VEHICLE & CRANE MOUNTED ELECTRICAL HAZARD SIGN APPLICATION & INFORMATION

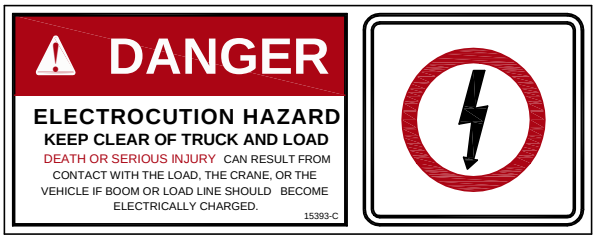

SIGN NO. 15393 DISPLAYS THE INTERNATIONAL SYMBOL FOR ELECTRICITY AND WARNS OF DANGER FROM AN ELECTRICALLY CHARGED VEHICLE, CRANE, OR LOAD. FOUR ARE RECOMMENDED (ONE FOR EACH SIDE AND ONE FOR EACH END OF VEHICLE) TO BE APPLIED IN LOCATIONS WHICH ARE READILY VISIBLE TO GROUND PERSONNEL.

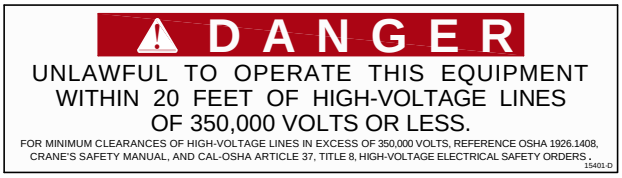

SIGN NO. 15401 PROVIDES ADDITIONAL WARNING OF LEGAL REQUIREMENTS WHEN OPERATING NEAR HIGH VOLTAGE LINES. THIS SIGN IS PLACED ON THE CONTROL PENDANT SIDE OF BOOM.

Table A - Minimum Clearance Distances

Voltage (nominal, kV, alternating current)	Minimum clearance distance (feet) *
Up to 50	10
over 50 - 200	15
over 200 - 350	20
over 350 - 500	25
over 500 - 750	35
over 750 - 1000	45
Over 1000	(as established by the utility owner/operator or registered professional engineer who is a qualified person with respect to electrical power transmission and distribution).

Table T - Minimum Clearance Distances While Traveling With No Load

Voltage (nominal, kV, alternating current)	While traveling - minimum clearance distance (feet) *
0 - 0.75	4
over 0.75 - 50	6
over 50 - 345	10
over 345 - 750	16
over 750 - 1000	20
Over 1000	(as established by the utility owner/operator or registered professional engineer who is a qualified person with respect to electrical power transmission and distribution).

* NOTE: ENVIRONMENTAL CONDITIONS SUCH AS FOG, SMOKE, OR PRECIPITATION MAY REQUIRE INCREASED CLEARANCES

DECAL #: 15390
DESCRIPTION: CAUTION, INSPECT VEHICLE & CRANE...
PURPOSE: TO INFORM THE OPERATOR OF KEY OPERATING REQUIREMENTS.
QUANTITY: 1
PLACEMENT: REAR COVER OR SIDE OF CRANE

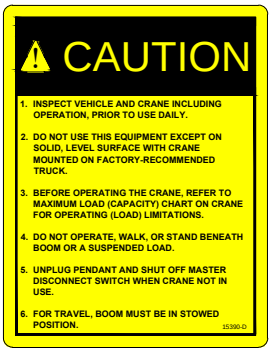

DECAL #: 15391
DESCRIPTION: DANGER, NOT A PASSENGER LIFT
PURPOSE: TO INFORM OPERATOR NOT TO LIFT, SUPPORT, OR TRANSPORT PERSONNEL, AND TO ENSURE OPERATOR IS ADEQUATELY TRAINED.
QUANTITY: 1
PLACEMENT: REAR COVER OR SIDE OF CRANE

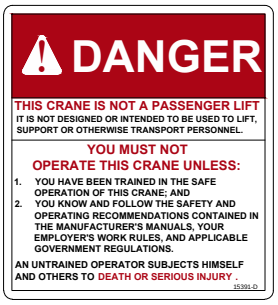

DECAL #: 15392
DESCRIPTION: DANGER, ELECTROCUTION HAZARD, MACHINE (CRANE)
PURPOSE: TO INFORM OPERATOR THAT MACHINE (CRANE) REPRESENTS AN ELECTROCUTION HAZARD SHOULD IT COME CLOSE TO OR IN CONTACT WITH AN ELECTRICAL VOLTAGE SOURCE.
QUANTITY: 1
PLACEMENT: REAR COVER OR SIDE OF CRANE

DECAL #: 15401
DESCRIPTION: DANGER, UNLAWFUL TO OPERATE
PURPOSE: TO INFORM OPERATOR OF PROPER OPERATION IN VICINITY OF ELECTRICAL LINES.
QUANTITY: 1
PLACEMENT: RING COVER OR SIDE OF CRANE

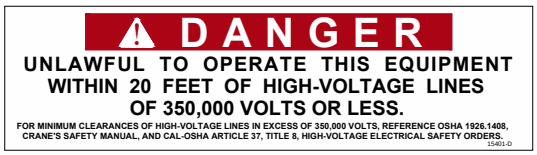

DECAL #: 15393
DESCRIPTION: DANGER, ELECTROCUTION HAZARD, VEHICLE (TRUCK)
PURPOSE: WARNS OF DANGER FROM ELECTRICALLY CHARGED VEHICLE, CRANE, OR LOAD.
QUANTITY: 4
PLACEMENT: EACH SIDE & EACH END OF VEHICLE

VENTURO® VENCO VENTURO INDUSTRIES LLC CINCINNATI, OHIO	TITLE SAFETY DECALS	DATE 04-29-16E	SECTION C150
	VENTURO CRANES	SUPERSEDES 10-24-13D	21353

PART NO.: 15513

DECAL: MASTER DISCONNECT SWITCH

FUNCTION: To inform the operator of location and operation of master disconnect switch.

QUANTITY: 1

PLACEMENT: On master disconnect switch bracket.

PART NO.: 20927

DECAL: CRANE STABILITY

FUNCTION: To inform the operator of the crane's lifting capacity throughout the entire rotation.

QUANTITY: 1

PLACEMENT: In prominent location, so it is easily seen and readily identifiable.

▲

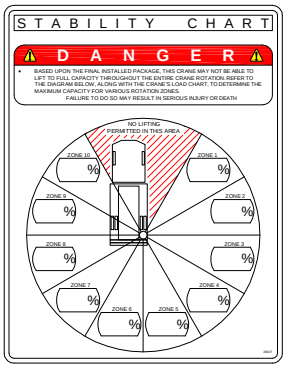

PART NO.: 14473-2

DECAL: CONDUCTIVE GREASE

FUNCTION: To show the operator where to apply grease.

QUANTITY: Varies

PLACEMENT: Near grease fittings.

PART NO.: 13397

DECAL: OIL LEVEL

FUNCTION: To inform the operator of proper oil level to maintain.

QUANTITY: 1

PLACEMENT: Side of hydraulic power unit.

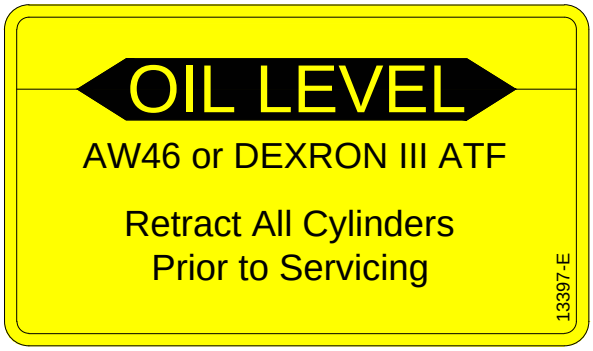

PART NO.: 15398

DECAL: UNPLUG REMOTE CONTROL

FUNCTION: To inform the operator to unplug remote control when not in use.

QUANTITY: 1

PLACEMENT: Near pendant socket.

PART NO.: 28955-1 & 28955-2

DECAL: CRANE CAPACITY 3516E

FUNCTION: To show the operator the operating capacities of crane.

QUANTITY: 1

PLACEMENT: One each side of boom.

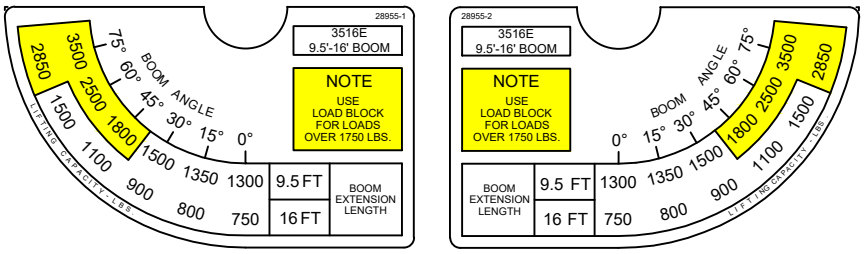

PART NO.: 28958-1 & 28958-2

DECAL: CRANE CAPACITY 3515E

FUNCTION: To show the operator the operating capacities of crane.

QUANTITY: 1

PLACEMENT: One on each side of boom.

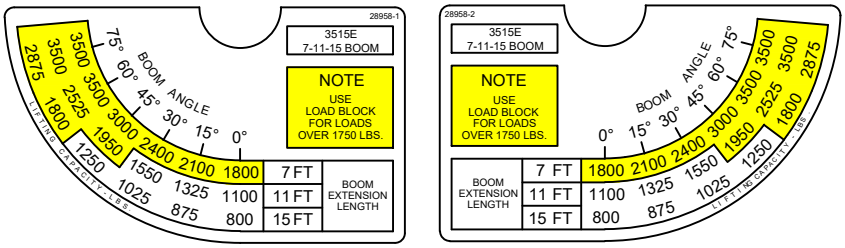

PART NO.: 28956
DECAL: MODEL 3516E

FUNCTION: To show the model of the crane.

QUANTITY: 2

PLACEMENT: One on each side of boom.

PART NO.: 28957
DECAL: MODEL 3515E

FUNCTION: To show the model of the crane.

QUANTITY: 2

PLACEMENT: One on each side of boom.

PART NO.: 27007-04a

DECAL: LOAD BLOCK CAPACITY DECAL

FUNCTION: To show the capacity of load block.

QUANTITY: 2

PLACEMENT: Each side of load block.

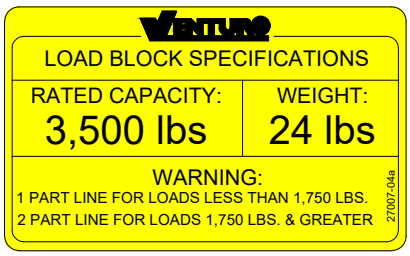

▲

PART NO.: 17813

DECAL: OVERLOAD SENSING SYSTEM DECAL

FUNCTION: To advise operator of overload sensing system.

QUANTITY: 1

PLACEMENT: Location may vary.

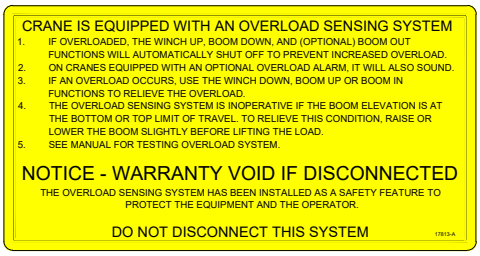

PART NO.: 14459 (WITH OPTIONAL ALARM)

DECAL: OVERLOAD ALARM SYSTEM DECAL

FUNCTION: To advise operator of overload alarm system.

QUANTITY: 1

PLACEMENT: Location may vary.

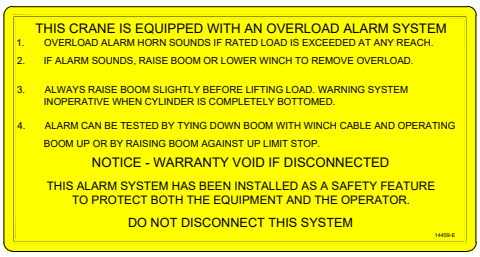

PART NO.: 28870-1 (RIGHT) & 28870-2 (LEFT)

DECAL: MANUAL OVERRIDE DECAL

FUNCTION: To show the manual override ports.

QUANTITY: 1

PLACEMENT: Inside rear cover.

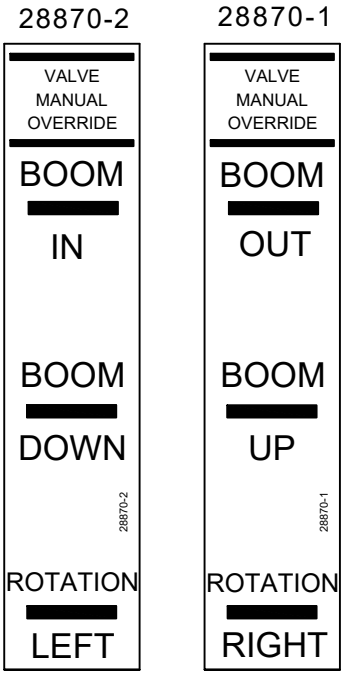

▲

PART NO.: 19315-2

DECAL: MANUAL OVERRIDE (PROPORTIONAL)

FUNCTION: To show operator how to override proportional valve.

QUANTITY: 1

PLACEMENT: Location may vary.

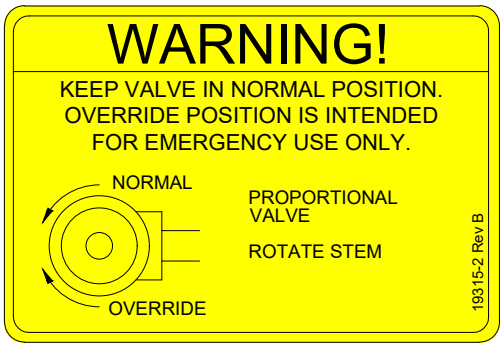

SECTION 200

INSTALLATION

VENCO VENTURO INDUSTRIES LLC
CINCINNATI, OHIO

7607200A

ITEM NO.	DESCRIPTION	MINIMUM RECOMMEDED MATERIAL SIZE
1	TOP PLATE	STEEL PLATE
2	CORNER POST	3" x 3" x 1/4" STEEL ANGLE
3	SHEAR WEB	12 Ga.
4	STABILIZER REINFORCEMENT PLATE	3/16" THICK STEEL PLATE
5	GUSSET	1/4" x 4" H.R. STEEL (NOT SHOWN)

NOTE:
IT IS THE SOLE RESPONSIBILITY OF THE INSTALLER TO INSURE THAT THE TOTAL STRUCTURE OF CRANE, TRUCK, AND STABILIZERS ARE STRUCTURALLY SOUND AND THAT THE COMPLETED VEHICLE HAS SUFFICIENT STABILITY AGAINST OVERTURNING.

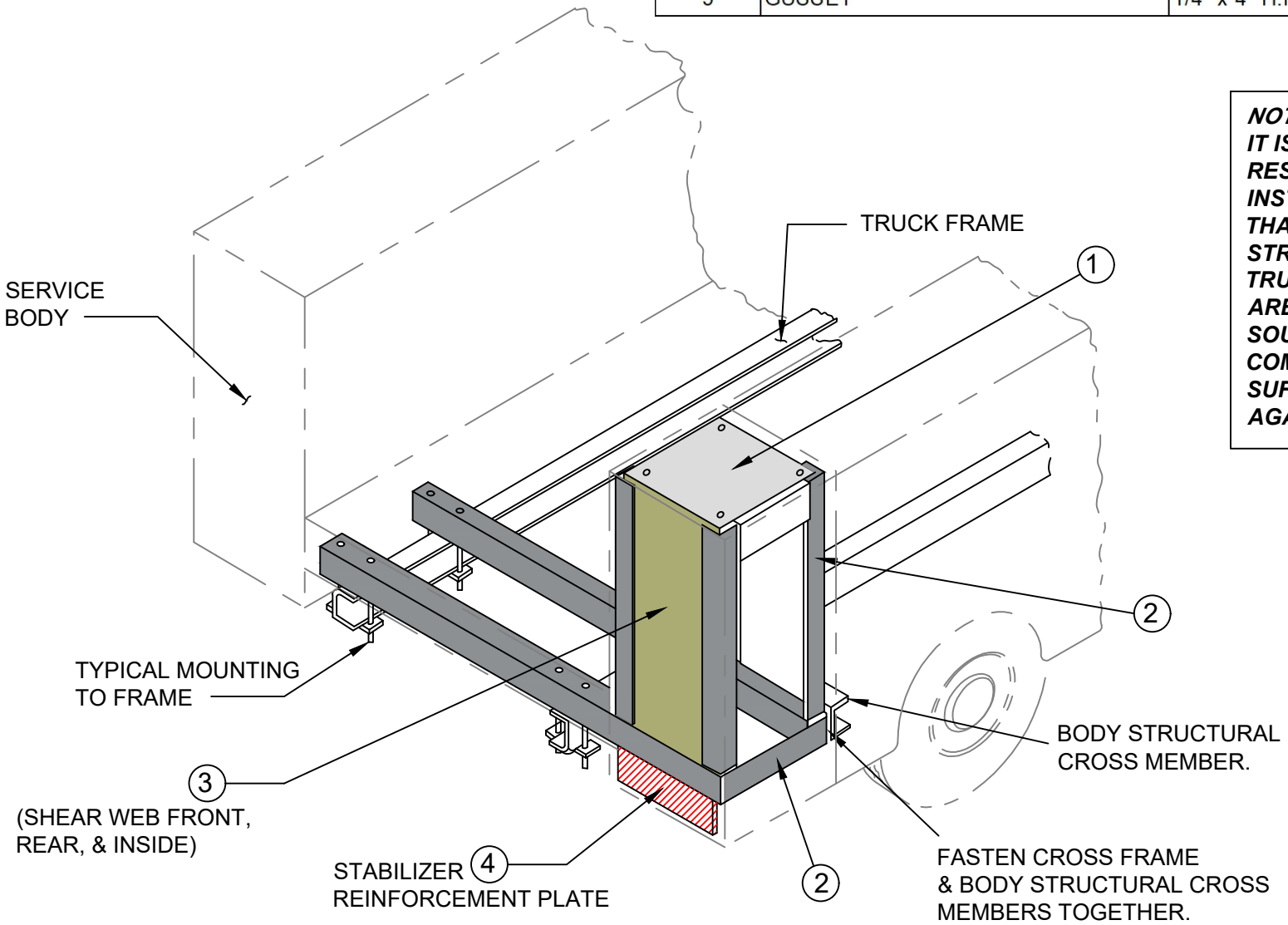

ILLUSTRATIONS NOT TO SCALE

VENTURO®

VENCO VENTURO INDUSTRIES LLC
CINCINNATI, OHIO

TITLE	DATE	SECTION
INSTALLATION DRAWING	09-10-24	C100
3215E/351*E	SUPERSEDES -	28933

!! IMPORTANT !!

ADEQUATE WIRING IMPERATIVE FOR PROPER OPERATION

1. PROPER GROUND PATH - SEE DWG 28821

2. CURRENT DRAW IS SEVERAL HUNDRED AMPERES - ADEQUATE WIRE SIZE AND BATTERY CAPACITY IS ABSOLUTELY ESSENTIAL (SEE CHART BELOW).

MINIMUM WIRE GAUGE AND AUXILIARY BATTERY SIZE										
MODEL	TOTAL LENGTH OF CABLE (FT) *								12 VOLT AUXILIARY BATTERY REQUIREMENTS	
	0-20	21-25	26-30	31-40	41-50	51-60	61-70	71-80	CCA (A) **	RC (MIN) ***
2010E	#2	#2	#1	#0	#00	NOT RECOMMENDED			450	100
3215E 3515E 3516E	#2	#2	#1	#0	#00	NOT RECOMMENDED			550	150
4016E 4020E 4516E 4520E 5020E 6020E	SEE DRAWING 28821 FOR CABLE AND BATTERY REQUIREMENTS									

* INCLUDES GROUND CABLE

** CCA = COLD CRANKING AMPS AT 0° (F).

*** RC = RESERVE CAPACITY IN MINUTES AT 25 AMPS AND 80° (F).
THE RC RATING IS A MEASURE OF THE PERIOD OF TIME THE BATTERY CAN SUPPLY A GIVEN CURRENT WITHOUT RECHARGING.

RECOMMENDED CIRCUIT BREAKER TABLE		
CRANE	DESCRIPTION	PART NO.
2010E	300 AMP, MAN RESET	22946-300
3215E	300 AMP, MAN RESET	22946-300
3515E/3516E	300 AMP, MAN RESET	22946-300
4016E/4020E	300 AMP, MAN RESET	22946-300
4516E/4520E	300 AMP, MAN RESET	22946-300
5020E	300 AMP, AUTO RESET	22946-300
6020E	300 AMP, AUTO RESET	22946-300

BATTERY REQUIREMENTS

- **12 VOLT *VEHICLE* BATTERY REQUIREMENTS**
  - **625 COLD CRANKING AMPS (AT 0º F)**
  - **160 MINUTES RESERVE CAPACITY**
  - **102 PLATES, 105 AMP-HR**
- (1) **12 VOLT *AUXILIARY* BATTERY REQUIREMENTS**
  - **SEE MINIMUM WIRE GAUGE AND BATTERY SIZE**

NOTE: OPERATING WITH THE VEHICLE BATTERY 'ONLY' IS PERMISSIBLE, BUT *NOT* RECOMMENDED.

RECOMMENDED BATTERY TERMINAL ATTACHMENT

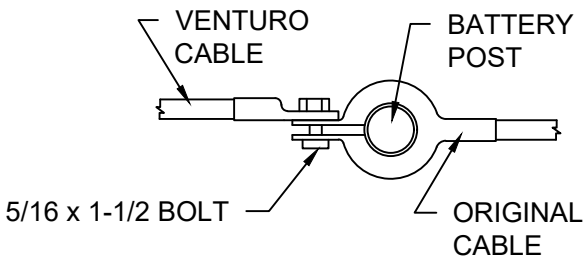

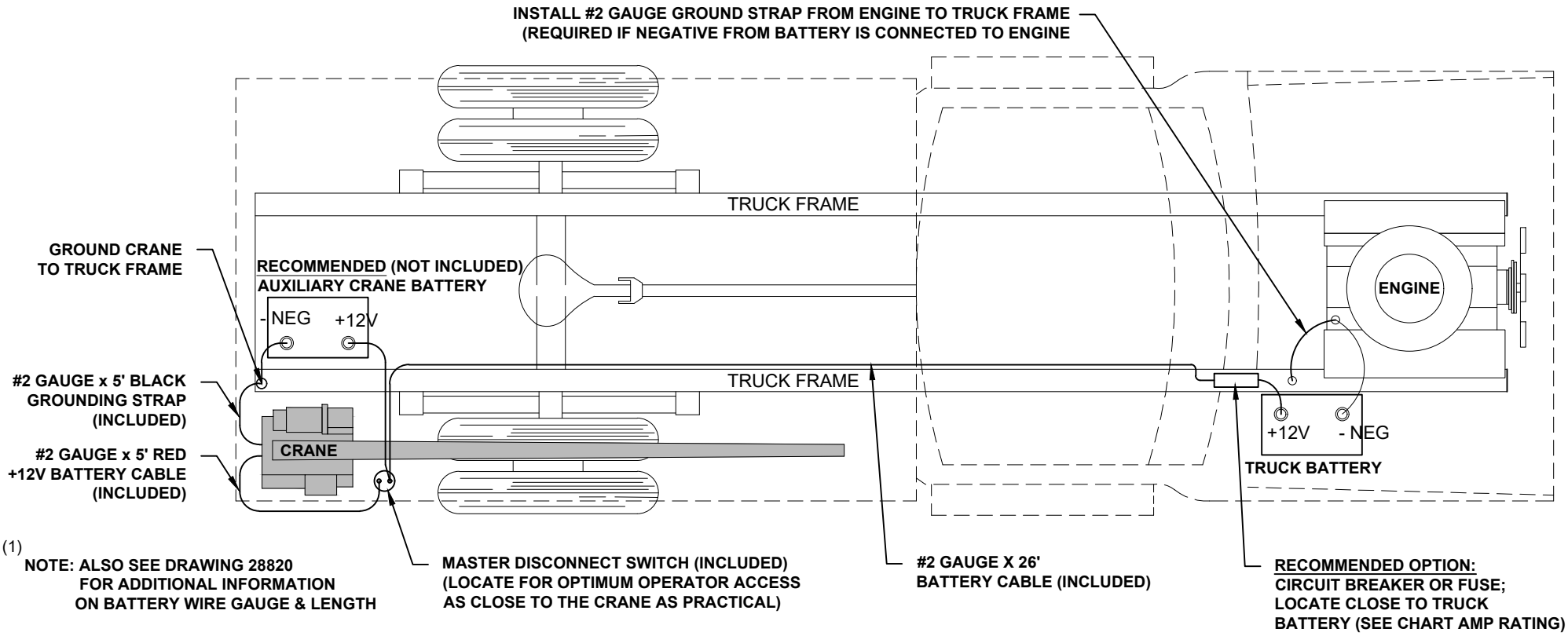

VENTURO®

VENCO VENTURO INDUSTRIES LLC
CINCINNATI, OHIO

TITLE	DATE	SECTION
BATTERY CABLE & COMPONENT INSTALL	02-19-24	C200
ET CRANES	SUPERSEDES -	28821

STABILITY TEST - 3516E

Overview

Venturo follows the guidelines of ANSI B30.5 in defining stability. Generally speaking, a truck is considered stable as long as it is not on the verge of tipping - i.e. with the truck level, at least one tire on each corner of the truck must remain in contact with the ground.

It is important to note that nearly every installation is unique and will, therefore, typically require stability testing.

The procedure outlined below follows ANSI's (B30.5 - 5-1.1.1) specified "maximum load rating" of 85% of truck stability.

Testing Procedure

1. Locate the truck on firm, level ground and set parking brake.

2. Fully deploy stabilizers, making sure they are firmly in contact with supportive ground; use stabilizer pads as required. The tires of the truck should remain in full contact with the ground.

3. Inspect wire rope and other key components of crane (consult owners manual for more information).

4. Conduct an operational check of all crane functions.

5. Locate the Overload Pressure Switch at the base of the elevation cylinder
   - 5.1. Disconnect the black & white wires from the housing and then connect the black & white wires together to by-pass the Overload Pressure Switch for the stability test. ***Note: The black & white wires MUST be reconnected to the Overload Pressure Switch after the stability test has be completed.***

6. Use a ***Test Weight*** weighing a ***minimum*** of ***882 lbs***, (includes load block weight of 24 lbs.) to a ***maximum of 925 lbs***.

7. Position the boom level and fully retracted.

8. Referring to the Stability Chart (drawing 20907) rotate the crane to a position between 1 and 2 o'clock (truck cab is facing 12 o'clock) to begin testing.

9. Use the winch to lift the Test Weight; DO NOT allow the weight to be more than 6" off the ground at any time during testing (for safety).

10. Using the test weight, extend the boom slowly, until one of the two conditions occur:
    - 10.1. Full boom extension is reached - Mark the ZONE in question **100%**
    - 10.2. The truck becomes unstable i.e., a tire lifts off the ground
      - 10.2.1. Retract the boom until at least one tire on each corner of the truck is making contract with the ground
      - 10.2.2. Use the formula below to determine the allowable ***% of Rated Capacity*** for the ZONE in question.

11. Note: The "***Max Stable Reach in inches"*** is measured from the ***center of rotation*** of the crane housing to the ***lifting load hook.***

$$\textbf{\% Rated Capacity} = \frac{\text{"Max Stable Reach" in inches"}}{192} \times 100$$

12. Record the **% of Rated Capacity** in the appropriate blank (region) on the Crane Stability page (ref. 20907) and decal.

13. Repeat Steps 7 through 12 for each ZONE on the stability page.

STABILITY TEST - 3515E

Overview

Venturo follows the guidelines of ANSI B30.5 in defining stability. Generally speaking, a truck is considered stable as long as it is not on the verge of tipping - i.e. with the truck level, at least one tire on each corner of the truck must remain in contact with the ground.

It is important to note that nearly every installation is unique and will, therefore, typically require stability testing.

The procedure outlined below follows ANSI's (B30.5 - 5-1.1.1) specified "maximum load rating" of 85% of truck stability.

Testing Procedure

1. Locate the truck on firm, level ground and set parking brake.

2. Fully deploy stabilizers, making sure they are firmly in contact with supportive ground; use stabilizer pads as required. The tires of the truck should remain in full contact with the ground.

3. Inspect wire rope and other key components of crane (consult owners manual for more information).

4. Conduct an operational check of all crane functions.

5. Locate the Overload Pressure Switch at the base of the elevation cylinder
   5.1. Disconnect the black & white wires from the housing and then connect the black & white wires together to by-pass the Overload Pressure Switch for the stability test. ***Note: The black & white wires MUST be reconnected to the Overload Pressure Switch after the stability test has been completed.***

6. Use a ***Test Weight*** weighing a ***minimum*** of ***941 lbs***, (includes load block weight of 24 lbs.) to a ***maximum of 1000 lbs***.

7. Position the boom level and fully retracted.

8. Referring to the Stability Chart (drawing 20907) rotate the crane to a position between 1 and 2 o'clock (truck cab is facing 12 o'clock) to begin testing.

9. Use the winch to lift the Test Weight; DO NOT allow the weight to be more than 6" off the ground at any time during testing (for safety).

10. Using the test weight, extend the boom slowly, until one of two conditions occur:
    10.1. Full extension is reached - Mark the ZONE in question 100%
    10.2. The truck becomes unstable i.e., a tire lifts off the ground
        10.2.1. Retract the boom until at least one tire on each corner of the truck is making contract with the ground
        10.2.2. Use the formula below to determine the allowable ***% of Rated Capacity*** for the ZONE in question:

11. Note: The "***Max Stable Reach in inches"*** is measured (horizontally) from the ***center of rotation*** of the crane housing to the ***lifting load hook.***

$$\textbf{\% Rated Capacity} = \frac{\text{"Max Stable Reach" in inches"}}{181} \textbf{ X 100}$$

12. Record the **% of Rated Capacity** in the appropriate blank (region) on the Crane Stability page (ref. 20907) and decal.

13. Repeat Steps 7 through 12 for each ZONE on the stability page.

CRANE STABILITY

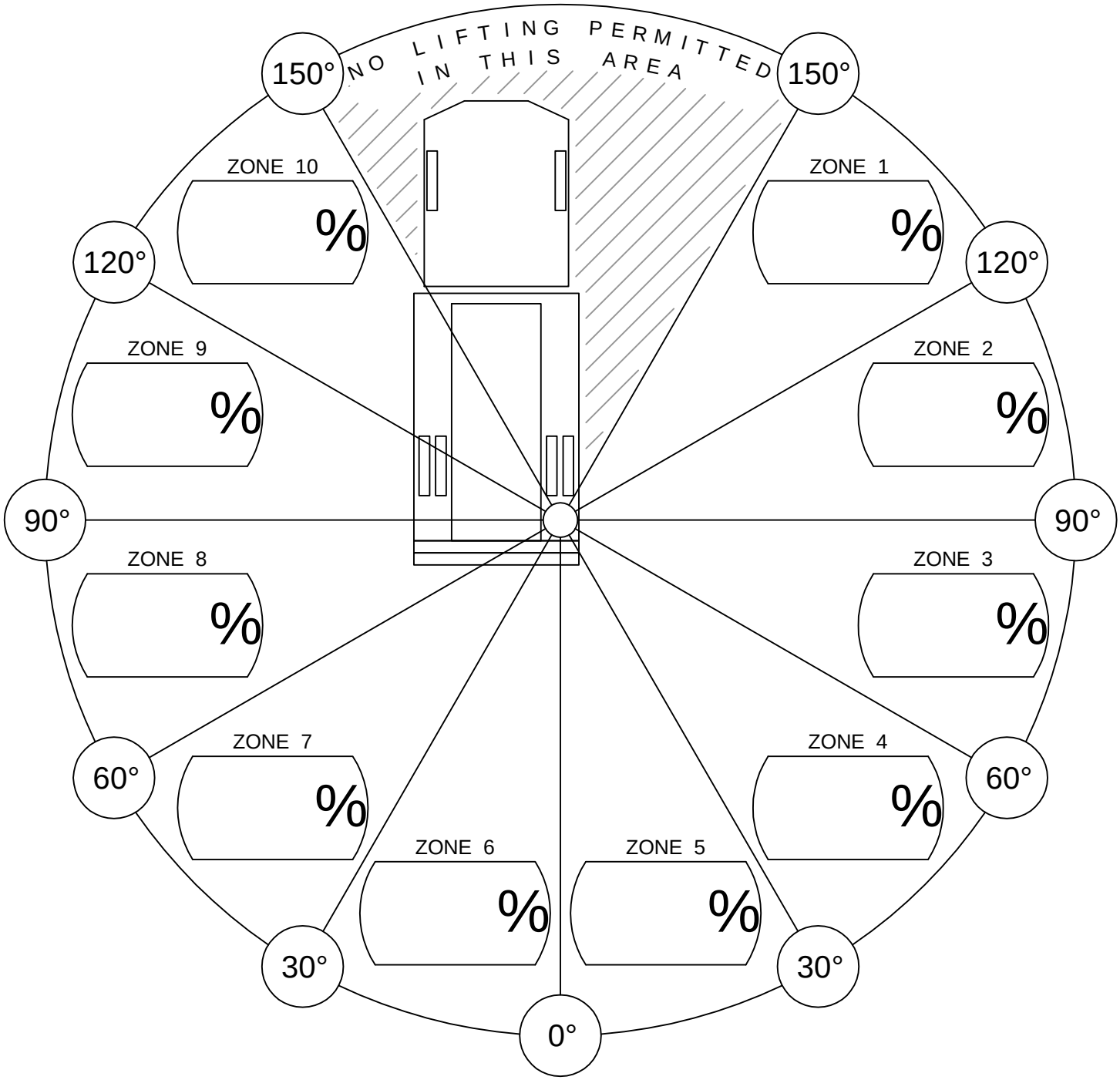

% of Rated Capacity for each of the 10 regions are provided above.

CONDITIONS:

- STABILIZERS FULLY EXTENDED & DOWN, ON FIRM LEVEL GROUND.

VENTURO® VENCO VENTURO INDUSTRIES LLC CINCINNATI, OHIO	TITLE STABILITY CHART	DATE 05-11-17F	SECTION C200
	VENTURO CRANES	SUPERSEDES 02-21-14E	20907

WIRE ROPE INSTALLATION

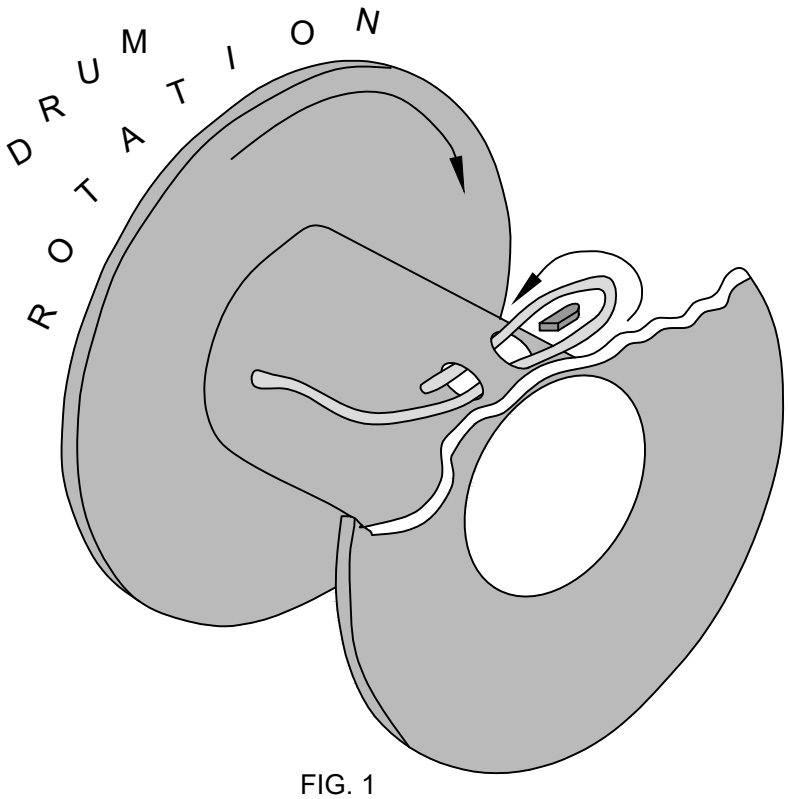

FIG. 1

STEP 1: UNWIND COIL OF WIRE ROPE BY 'ROLLING' ALONG THE FLOOR. THIS WILL PREVENT 'KINKING'.

STEP 2: INSERT WIRE ROPE END UP THROUGH ANTI-2-BLOCK (A2B) ASSEMBLY, BETWEEN CHEEK PLATES, OVER THE TOP SHEAVE, AND THROUGH WIRE ROPE GUIDE.

STEP 3: INSERT WIRE ROPE END INTO POCKET OPENING ON WINCH, WRAP AROUND WEDGE, AND BACK THROUGH POCKET OPENING AS SHOWN IN FIGURE 1.

⚠ CAUTION

- IF THE WIRE ROPE IS NOT INSTALLED FOR THE CORRECT DRUM ROTATION, THE WINCH BRAKE VALVE WILL NOT HOLD THE LOAD.

⚠ CAUTION

- THERE MUST ALWAYS BE AT LEAST [5] DEAD WRAPS OF WIRE ROPE ON THE WINCH DRUM WHILE UNDER LOAD.

NOTE: SOME WINCHES MAY BE SUPPLIED WITH A HEX NUT IN LIEU OF A WEDGE FOR INSTALLING THE WIRE ROPE.

WORK LIGHT INSTALLATION: 28240-1 (3-WIRE CORD REEL ON NON-VLC CRANES)

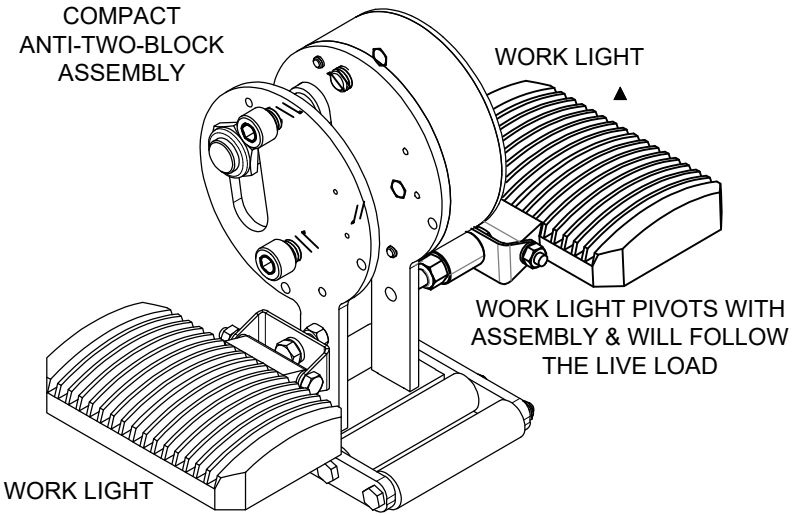

	BILL OF MATERIALS		-1	28240
	#	DESCRIPTION		PART NUMBER
▲	1	IDWG; WORK LIGHT INSTALLATION, NON-VLC CRANES	1	28855
▲	2	LED WORK LIGHT	2	27483
	3	TERMINAL; 16G, FEMALE, QUICK-CONNECT	3	!TERM16G250QCFI
	4	TERMINAL; 16G, MALE, QUICK-CONNECT	4	!TERM16G250QCM
	5	WIRE ASS'Y; 16G, BLACK, 28", #6 RING - STRIPPED END	2	22254-BLK280AO
	6	WIRE ASS'Y; 16G, BLACK, 28", QCF - STRIPPED END	2	22254-BLK280GO
	7	TOGGLE SWITCH; ON / OFF, IP-RATED	1	22476
	8	HALF-BOOT, FOR IP-RATED TOGGLE SWITCH	1	19793
	9	DECAL; ON/OFF, OPTIONAL WORK LIGHT W/ TOGGLE	1	28307
	10	WIRE ASS'Y; 16G, RED, 20", #6 RING - #10 RING	1	22254-RED200AB
	11	TERMINAL; 16G, #6 RING, CLOSED-END	1	!TERM16G#6RG
▲	12	STAND OFF; .75"OD X .38" ID X 1" LONG, ALUM (LEFT SIDE MOUNT)	1	24496

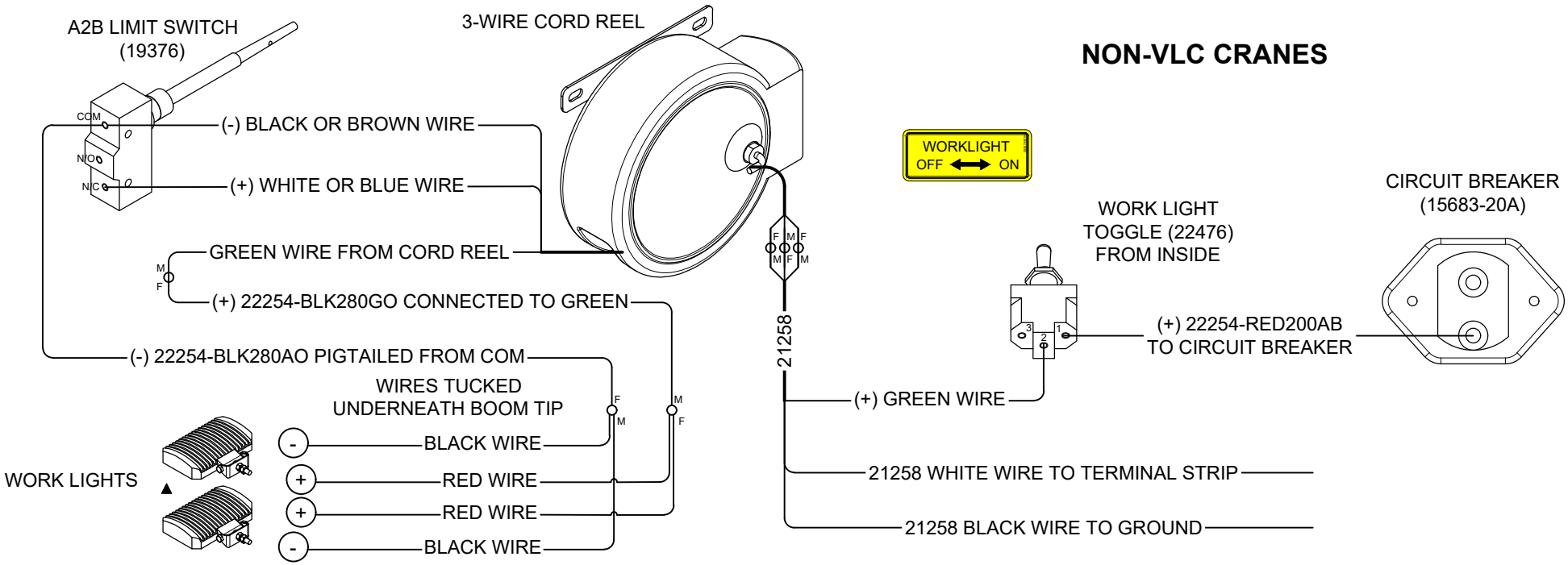

VENTURO®

VENCO VENTURO INDUSTRIES LLC
CINCINNATI, OHIO

TITLE	DATE	SECTION
WORK LIGHT INSTALLATION, 3-WIRE CORD REEL	06-25-26A	C400
NON-VLC CRANES	SUPERSEDES 09-13-24	28855

SECTION 300

OPERATION

&

MAINTENANCE

VENCO VENTURO INDUSTRIES LLC
CINCINNATI, OHIO

SAFETY

Before operating this crane, read and understand these instructions, the "CRANE SAFETY AND HAZARDS" pages, and review all safety and instruction decals on the crane.

CRANE INSPECTION

Before operating this crane, inspect for wear, damage, and oil leakage. After the wire rope has been run out, check for wear, kinks, and broken strands. Check the hook and safety latch for damage. Correct problems before using the crane.

CAPACITY

Before operating this crane, review the capacity charts on the sides of the boom to relate the load to be lifted to the boom length and angle. The boom angle is indicated by a gravity arrow.

LOAD BLOCK

If the load exceeds the one-part line rating as shown on the "MAXIMUM LOAD CAPACITY" page in this manual *or* if reduced winch line speed for better control of loads is desired, use the load block to rig the crane for two-part line operation.

CONTROLS

This crane is operated by either a corded or radio remote control pendant. If corded, the pendant should be unplugged and stored in a compartment or the cab when the crane is not in use.

With the Master Disconnect Switch in the OFF position, inspect pendant head and switches for damage; for corded remote controls also inspect the plug, socket, and cord. Actuate all switches or buttons in both directions to verify that they all have the same feel and sound, and that they return to the center or resting position.

Plug the pendant into the socket on the right side of the crane.

Turn ON the Master Disconnect Switch. Use "WINCH DOWN" to release tension on the wire rope and unhook it from the storage tie-down position.

Use "BOOM UP" to elevate the boom from the boom rest position.

Check all control functions to see that they are working correctly.

CONTROL FUNCTIONS

WINCH - "WINCH UP" raises the wire rope and "WINCH DOWN" lowers the wire rope. An integrated brake holds the load in place when the winch is not in operation and controls the lowering speed of the load.

ELEVATION - "BOOM UP" raises the boom (increases the boom angle) and "BOOM DOWN" lowers the boom (decreases the boom angle). A counterbalance valve on the cylinder prevents the boom from coming down if a hose breaks and controls the rate at which the boom lowers.

EXTENSION - "BOOM OUT" extends the boom and "BOOM IN" retracts the boom. A counterbalance valve on the cylinder prevents the boom from retracting if a hose breaks and controls the rate at which the boom retracts.

ROTATION - "ROTATE LEFT" and "ROTATE RIGHT" control the direction of rotation. The crane can be rotated continuously. The rotation system is self-locking when not in operation.

TRIGGER (Proportional Only) - Varies the flow rate delivered to the hydraulic functions (elevation, extension, and rotation). The farther the trigger is pulled, the faster the selected hydraulic function operates.

CONTROL PRIORITY SYSTEM - When operating "Winch Up", all hydraulic functions (elevation, extension, and rotation) will be disabled to limit the total current (amp) draw.

OVERLOAD SENSING SYSTEM

This crane is equipped with an Overload Sensing System. If the capacity of the crane is exceeded, the "Winch Up", "Boom Down", and "Boom Out" functions will be shut down. The "Winch Down", "Boom Up", and "Boom In" functions will continue to operate and can be used to relieve the overload condition. The "Rotation Left" and "Rotation Right" functions also will continue to operate.

The warning system is INOPERATIVE when the elevation cylinder is fully retracted ("bottomed out"). Use "BOOM UP" to extend the elevation cylinder and ensure that the overload system is active.

TWO-BLOCK SENSING SYSTEM

This crane is equipped with an anti two-block device that is mounted at the tip of the boom. If the load block / overhaul weight contacts the device, the "Winch Up", "Boom Down", and "Boom Out" functions will be disabled. The "Winch Down", "Boom Up", and "Boom In" functions will continue to operate and can be used to relieve the two-block condition.

CRANE OPERATION

Avoid rapid reversal of the winch switch. The high in-rush current to the motor during reversal can reduce the life of electrical components.

When operating "WINCH UP", "BOOM DOWN", or "BOOM OUT," always maintain clearance between the boom head and the load block or hook.

Never lift or drag a load sideways ("side load") using any of the crane functions; it could cause permanent damage to the crane.

OVERLOAD ALARM (Optional)

This crane may be equipped with an optional overload alarm system.

1. Overload alarm horn sounds if rated load is exceeded at any reach.

2. If alarm sounds, use "WINCH DOWN", "BOOM UP", or "BOOM IN" to remove the overload.

3. The warning system is INOPERATIVE when the elevation cylinder is fully retracted ("bottomed out"). Use "BOOM UP" to extend the elevation cylinder and ensure that the overload system is active.

4. Overload alarm can be tested by raising boom to full elevation.

MANUAL TELESCOPIC BOOM

If your crane has a manual telescoping section, use toggle pin to position the boom in either the extended or retracted position. Never operate the crane without the toggle pin secured in place.

TRUCK SETUP & STABILIZERS

1. The truck should be parked on firm, level ground when using the crane.

2. The center of the crane should be positioned close enough to the job so that it can be operated at a reach that puts the load within the rated capacity of the crane.

3. Set the vehicle parking brake and put the vehicle transmission in "park" (automatic transmission).

4. Deploy the stabilizers to stabilize the vehicle against rocking or overturning when lifting with the crane.

PREPARATION FOR TRAVEL

1. Return the stabilizers to the stowed position. Install and secure all pins.

2. Stow the crane boom in the boom rest.

3. Hook the winch line to a tie-down point on the body or pedestal and apply light tension.

4. Turn OFF Master Disconnect Switch.

5. If using corded control pendant, unplug pendant and store in body compartment or cab.

⚠ WARNING

Master Disconnect Switch (power) must be turned "OFF" when the crane is not in use! If corded, the pendant must be unplugged from the crane socket. Failure to follow these steps may result in dangerous, unintentional activation of the crane functions.

MANUAL OVERRIDE INSTRUCTIONS
ET CRANES, NON-PROPRTIONAL SERIES CRANES ▲

!! READ ALL INSTRUCTIONS BEFORE PERFORMING MANUAL OVERRIDE PROCEDURES !!

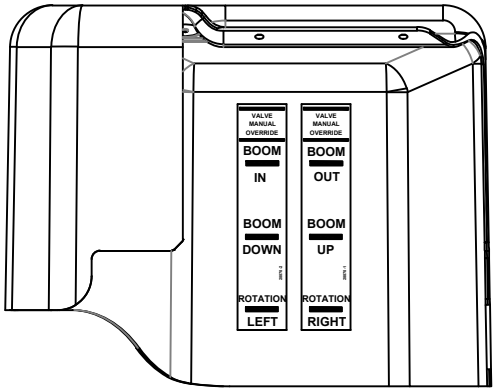

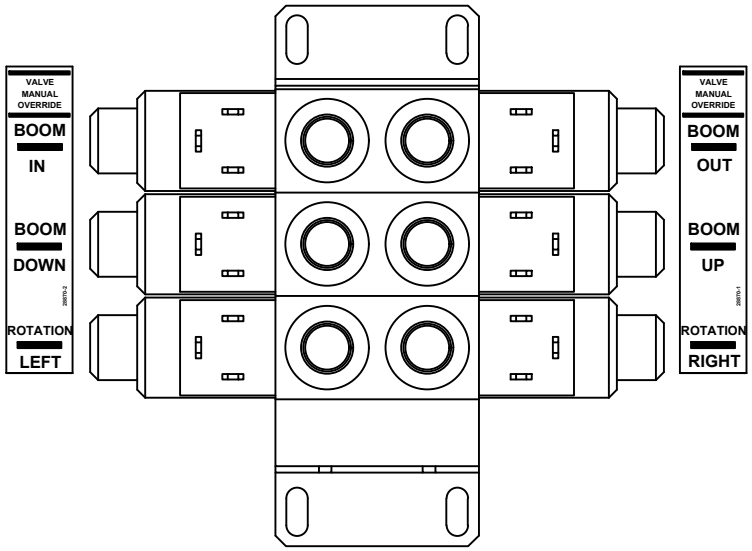

Each valve station incorporates [2] hydraulic ports and [2] coils. Manual override shafts are located in the center of the coils (see figure 1). Manual override decals are placed on each crane inside the plastic cover near the valve assembly. These decals provide a visual aid that helps the operator determine the function designations.

2-STATION FUNCTIONS:

BI	=	Boom In	BO	=	Boom Out
BD	=	Boom Down	BU	=	Boom Up
RL	=	Rot. Left	RR	=	Rot. Right

1

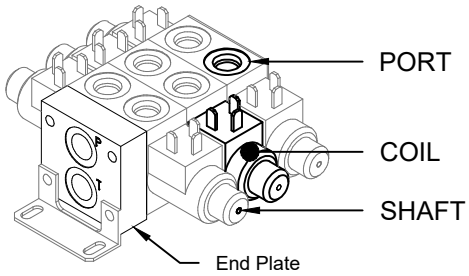

2

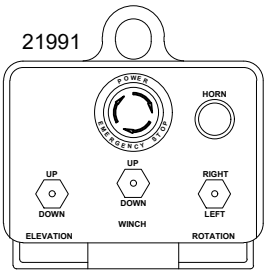

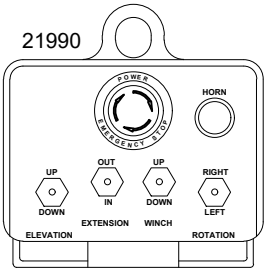

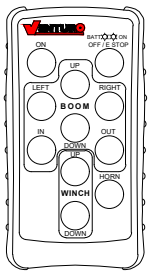

ALWAYS BE SURE TO CHECK HYDRAULIC OIL LEVEL BEFORE PROCEEDING. IT IS RECOMMENDED TO REMOVE ANY ITEM(S) THAT MAY INTERFERE WITH OPERATING THE CRANE MANUALLY. IF POSSIBLE, STRAPS AND/OR HARNESSES SHOULD BE REMOVED BEFORE OPERATING A CRANE IN MANUAL OVERRIDE !!

Procedure:

1. Turn Master disconnect switch to "ON"

2. Power up the pendant / radio
   - 2.1. PENDANT - twist EMERGENCY STOP button clockwise
   - 2.2. RADIO - Press green ON button

3. Inside the plastic cover, reference the function you wish to perform using the manual override decal

4. Using a tool with a diameter of 1/8" or smaller, press the shaft inward and hold

5. Reference the functions listed on your pendant or radio (see figure 2)

6. Press the switch or button for the same function

7. If you need to change function,
   - 7.1. Release switch or button
   - 7.2. Remove tool from shaft
   - 7.3. Go to step 3

For assistance, please feel free to contact Technical Support at 800-226-2238.

MANUAL OVERRIDE INSTRUCTIONS
ET CRANES, PROPORTIONAL SERIES CRANES ▲

!! READ ALL INSTRUCTIONS BEFORE PERFORMING MANUAL OVERRIDE PROCEDURES !!

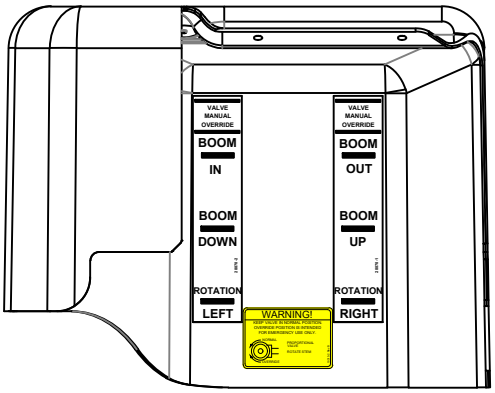

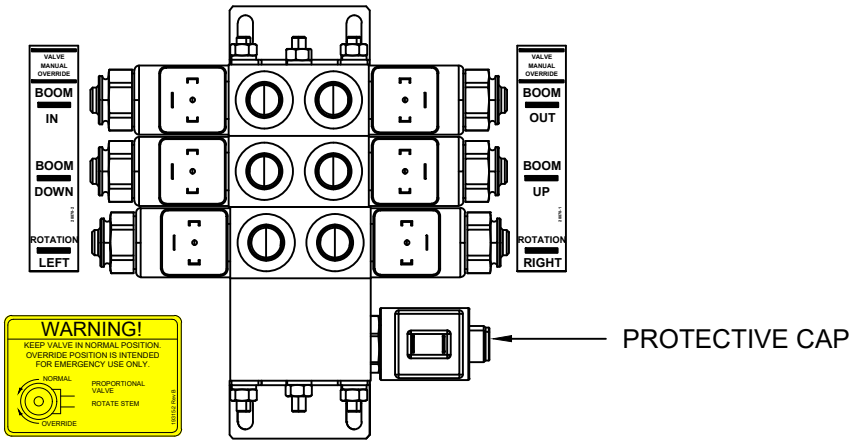

Each valve station incorporates [2] hydraulic ports and [2] coils. Manual override shafts are located in the center of the coils (see figure 1).
Manual override decals are placed on each crane inside the plastic cover near the valve assembly. These decals provide a visual aid that helps the operator determine the function designations.

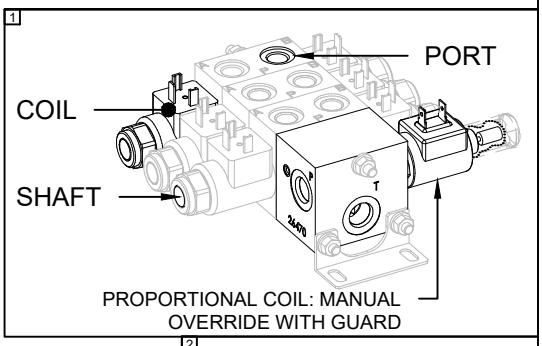

3-STATION FUNCTIONS:

RR	=	Rot. Right	RL	=	Rot. Left
BU	=	Boom Up	BD	=	Boom Down
BI	=	Boom In	BO	=	Boom Out

ALWAYS BE SURE TO CHECK HYDRAULIC OIL LEVEL BEFORE PROCEEDING. IT IS RECOMMENDED TO REMOVE ANY ITEM(S) THAT MAY INTERFERE WITH OPERATING THE CRANE MANUALLY. IF POSSIBLE, STRAPS AND/OR HARNESSES SHOULD BE REMOVED BEFORE OPERATING A CRANE IN MANUAL OVERRIDE !!

Procedure:

1. Turn Master disconnect switch to "ON"

2. Remove Protective cap

3. Rotate Valve Stem Clockwise to close

4. Power up the pendant / radio
   4.1. Twist EMERGENCY STOP button clockwise

5. Inside the plastic cover, reference the function you wish to perform using the manual override decal

6. Using a tool with a diameter of 1/8" or smaller, press the shaft inward and hold

7. Reference the functions listed on your pendant or radio (see figure 2)

8. Press the switch or button for the same function

9. If you need to change function,
   9.1. Release switch or button
   9.2. Remove tool from shaft
   9.3. Go to step 5

For assistance, please feel free to contact Technical Support at 800-226-2238.

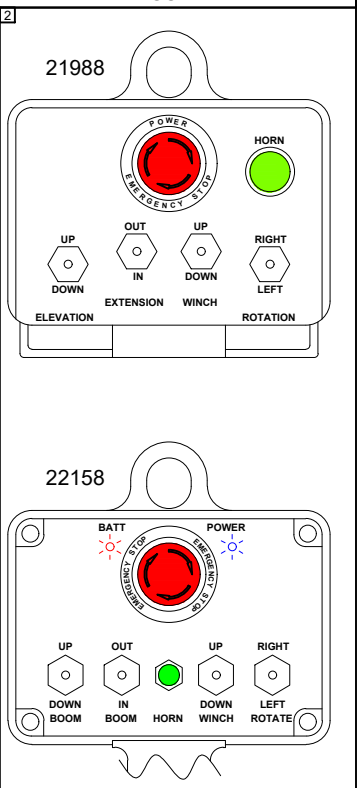

	TITLE	DATE	SECTION
VENTURO® VENCO VENTURO INDUSTRIES LLC CINCINNATI, OHIO	MAN. OVERRIDE INSTR.	08-11-25B	C200
	ET CRANES PROPORTIONAL VALVE ▲	SUPERSEDES 04-03-25A	28827

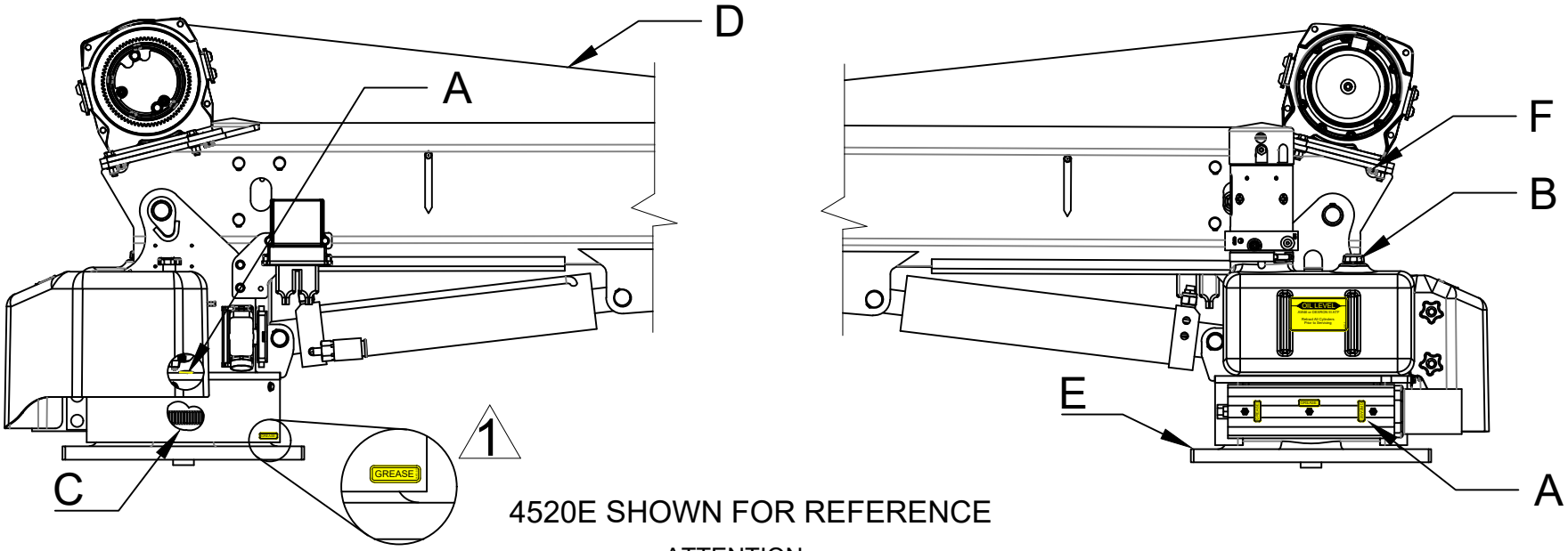

4520E SHOWN FOR REFERENCE

ATTENTION:

NEVER WASH THIS CRANE WITH CHEMICAL PRODUCTS OR HIGH PRESSURE WATER JETS, AS THEY CAN CAUSE DETACHMENT OF DECALS OR ENTRANCE OF WATER INTO ELECTRICAL OR SLEWING RING COMPONENTS

Location	Service Required	Note		Service Interval
A	Grease fitting With Pressure Grease Gun	Use FUCHS Renolit Aluminum Complex Grease, or equivalent 1 ALIGNMENT: To align hole w/ fitting, remove Cover, line up grease decals on lower cover and base gusset.		Time of Truck Service
B	Fill Oil Reservoir to Oil Level with Boom Down and Boom In.	Use Dextron ATF for Ambient Temperatures Between -22° F and 30° F	Use ISO Viscosity Grade 68 or Equivalent for Ambient Temperatures Between 10°F and 125°F	Time of Truck Service and as required by changes in the ambient temperature range
C	Lubricate Gear Teeth	Remove Cover & Use Chassis Grease		Time of Truck Service
D	Check Wire Rope and Hook	Rope should be free of kinks and fraying		Time of Truck Service
E	Check Torque of Base Mounting Bolts	Square Base: Torqued to 200 ft-lbs		Time of Truck Service
-	Check Torque of Base Mounting Bolts	Rectangular Base: Torqued to 455 ft-lbs		Time of Truck Service
F	Check Torque of Winch Mounting Bolts	Bolts should be torqued to 35 ft-lbs*		Time of Truck Service

* 32 FT-LBS FOR 3215E/351XE WITH GTD-2200 COMEUP WINCH. SEE PAGE 28928 FOR WINCH IDENTIFICATION. ▲

MINIMUM VOLTAGE TEST

ONE OF THE MOST COMMON ELECTRICAL PROBLEMS ENCOUNTERED ON 12 VOLT ELECTRICAL CRANES IS INSUFFICIENT VOLTAGE AT THE MOTOR WHEN DRAWING THE LARGE CURRENT THAT EXISTS AT FULL LOAD

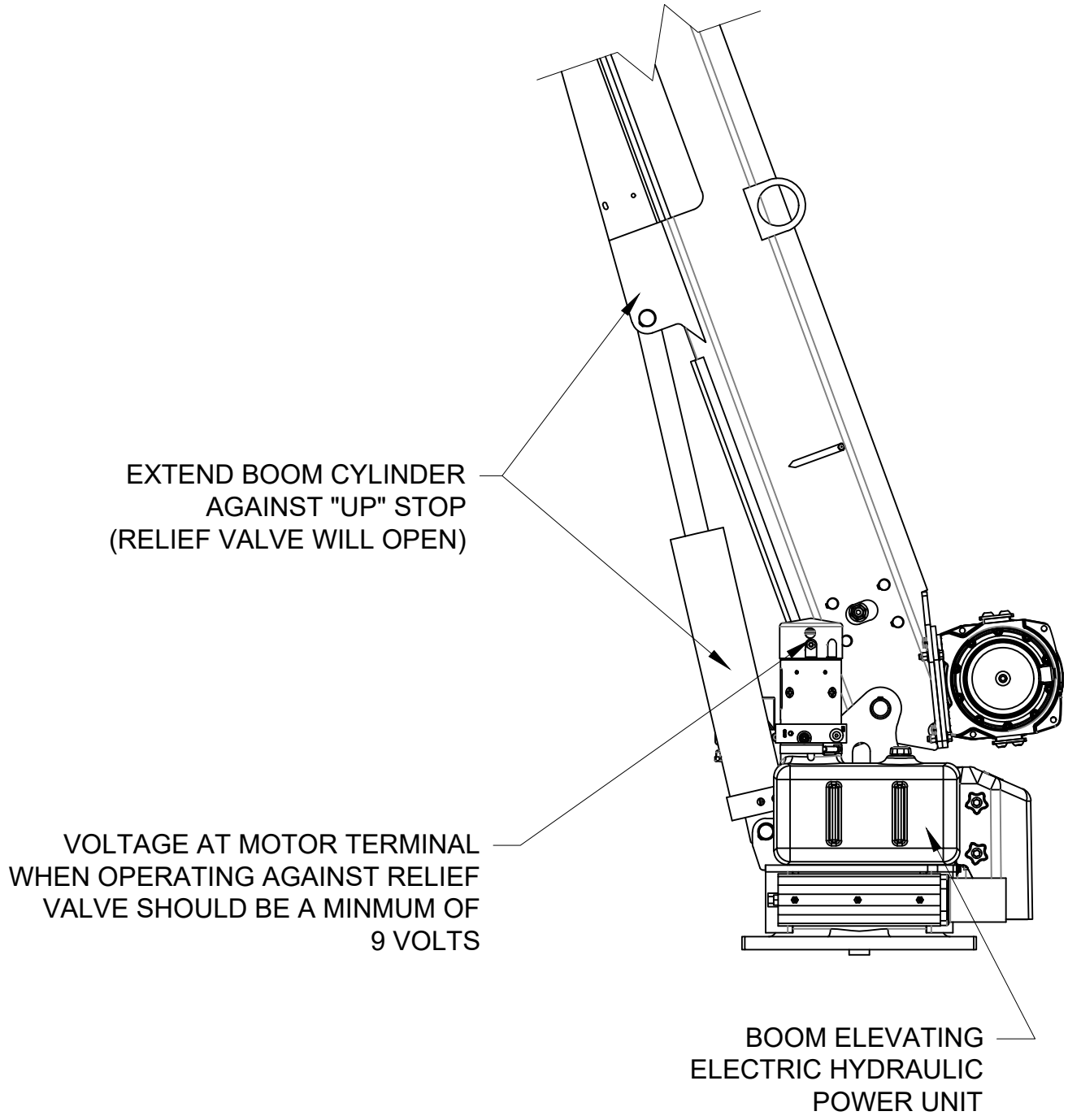

Compact A2B with Stowage Cut-out, Install/Adjustment Instructions (Kit: 28375)

The purpose of the Stowage Cut-out system is to prevent a situation whereby the wire rope is over-tensioned when the load block / wire rope is attached to the stowage hook on the bottom of the primary boom assembly. ***However, the OPERATOR is ultimately responsible for ensuring that the wire rope is not over-tensioned when stowing the wire rope and boom assembly into the boom rest.***

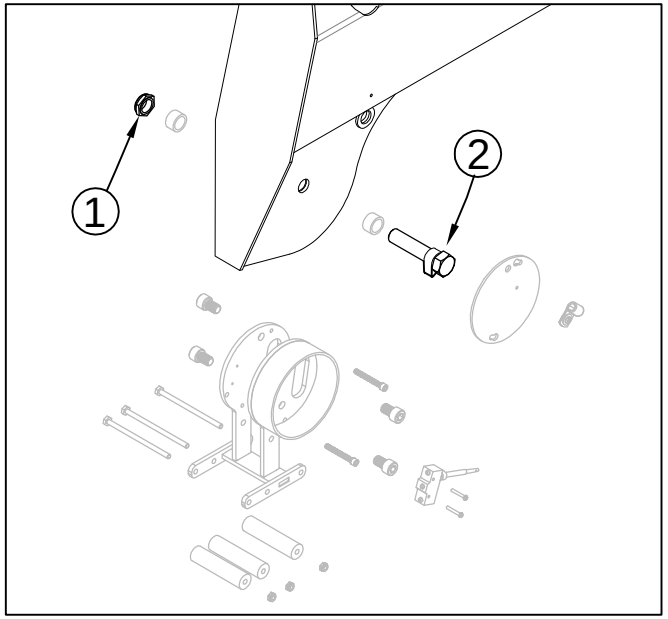

1. Initially, apply a light torque to the nyloc full nut Item #1 (P/N !LNUT-07510), such that the axle bolt & cam welded assembly can be rotated / adjusted in the steps below.
2. Position the cam ***lobe*** Item #2 (P/N 28362) so that it is pointing towards the housing / mechanism
3. Hang the load block on the open stowage hook under the primary boom.
4. Thread the wire rope through the load block in a two-line configuration; the wire rope end / eyelet is pinned in the standard position on the tertiary boom tip
5. Actuate the Winch Up function until the load block and wire rope are ***taut*** enough to prevent the load block from bouncing during transit, ***but do not tighten excessively so as to prevent damage to the wire rope.***
6. Rotate the axle bolt & cam welded assembly towards the housing (clockwise in standard configuration) until the cam lobe makes contact with and trips the wobble micro switch and actuates the A2B function.
7. Once adjusted, torque the nyloc full nut (Item #1) to 100 ft*lbs to prevent further rotational movement of the axle bolt & cam welded assembly.
8. Test the A2B trip-point by slackening and tightening the wire rope / load block assembly by actuating Winch Up/Down. ***NOTE: The point at which the A2B trips WILL vary to some degree, depending upon the winch up speed. It is recommended to actuate the winch up function slowly, which will yield a consistent and repeatable result, in terms of wire rope tension when stowed.***

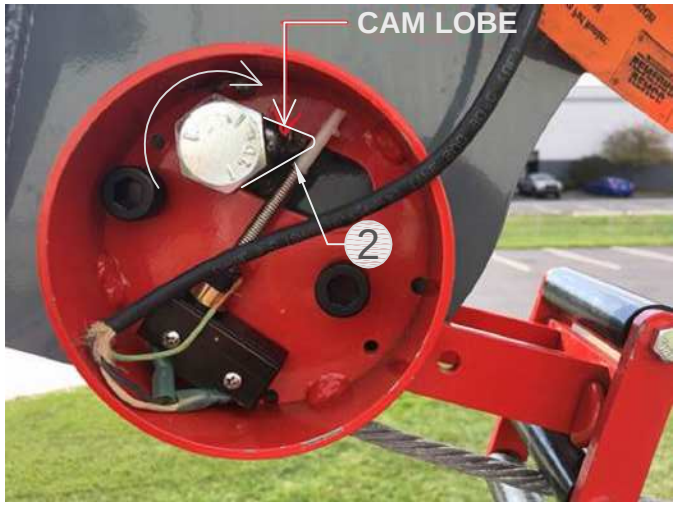

Contact Venturo Tech Support for assistance. 1-800-226-2238 ext. 124

SECTION 400

REPLACEMENT PARTS

VENCO VENTURO INDUSTRIES LLC
CINCINNATI, OHIO

7607400A

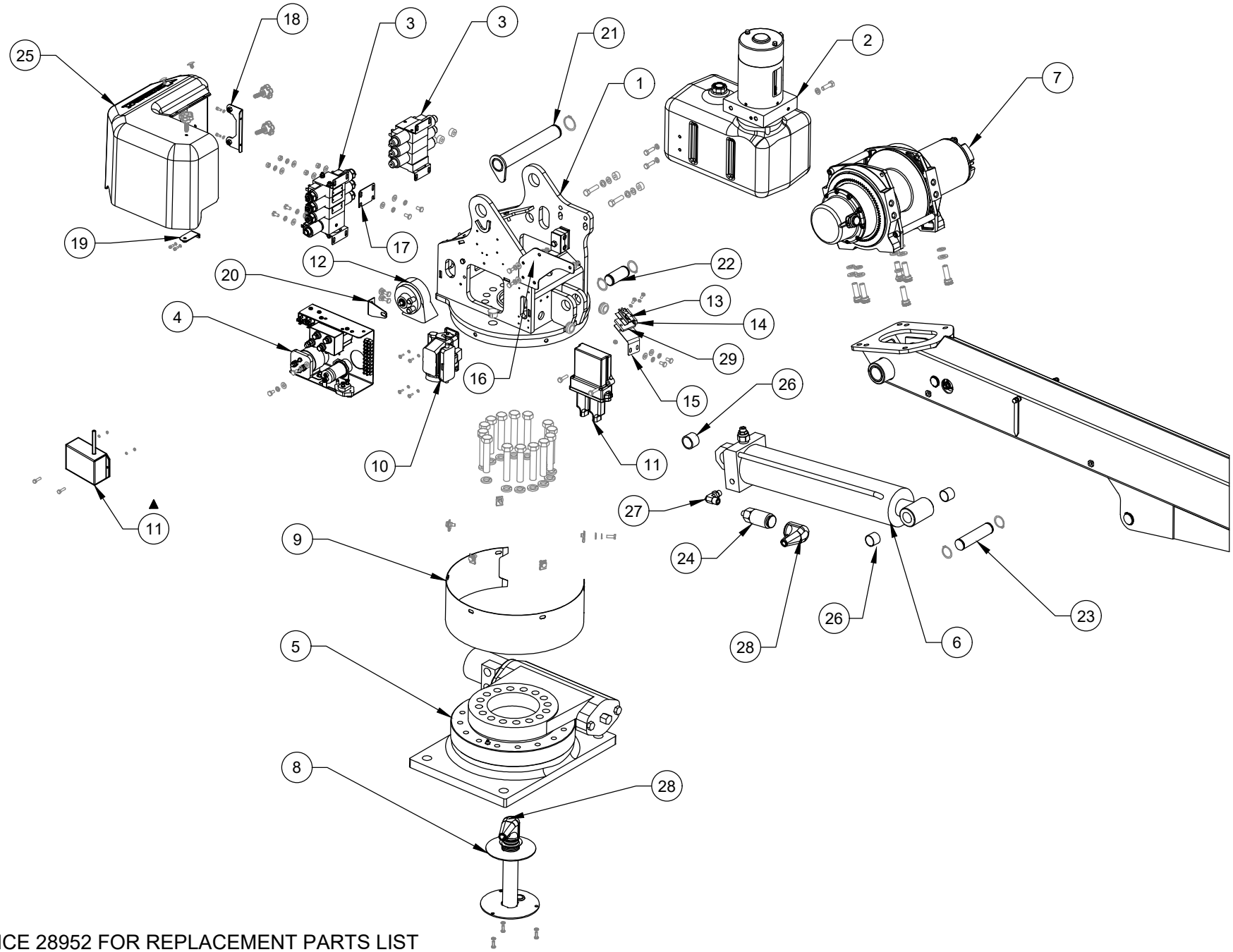

REFERENCE 28952 FOR REPLACEMENT PARTS LIST

VENTURO®

VENCO VENTURO INDUSTRIES LLC
CINCINNATI, OHIO

TITLE	DATE	SECTION
REPLACEMENT PARTS DWG - MECH	10-23-26D	C400
3215E/3515E/3516E	SUPERSEDES 09-22-25C	28951

ITEM NO.	NON-PROP	PROP	PART NUMBER	DESCRIPTION
	QTY.			
1	1	1	28637	HOUSING WELDMENT ASSEMBLY
2	1	1	28720	HYDRAULIC POWER UNIT
3	-	1	28800	VALVE BLOCK ASSY; 3-SPOOL W/ PROP VALVE.
	1	-	28801	VALVE BLOCK ASSY; 3-SPOOL W/ NON-PROP V.
4	1	1	28700	ELECTRICAL COMPONENT PANEL
5	1	1	21735-1	SLEWDRIVE W/ CAST RECTANGULAR BASE
6	1	1	23059	ELEVATION CYLINDER
7	1	1	21556	ELECTRIC WINCH
8	1	1	16780-2P8	ASSY; 2-POLE SLIP-RING
9	1	1	21185	ROTATION GEAR GUARD
10	1	1	22480	SOCKET ASSY; 16 + 1 POLE
11	-	1	22158	RADIO, ET, PROPORTIONAL
	1	-	21986-ET	RADIO, ET, NON-PROPORTIONAL
▲ 11	-	1	24471	RADIO, ET, PROP, KARTECH
	1	-	24470	RADIO, ET, NON-PROP KARTEH
12	1	1	21948	HORN
13	1	1	19918	BOOM SHUT OFF SWITCH
14	1	1	19917	BOOM SHUT OFF SWITCH BRACKET
15	1	1	28641	SHUT OFF SWITCH ADJUSTABLE BRACKET
16	1	1	28642	BRACKET; RADIO RECEIVER.
17	-	1	28803	ADAPTER PLATE, PROP VALVE ASSY
18	1	1	28646	PLASTIC COVER BACK BRACKET WELDMENT
19	1	1	28647	PLASTIC COVER SIDE BRACKET WELDMENT
20	1	1	22000	BRACKET; HORN
21	1	1	28690	BOOM PIVOT PIN - WELDMENT
22	1	1	21172	ELEVATION CYLINDER INBOARD PIN
23	1	1	21547	ELEVATION CYLINDER OUTBOARD PIN
24	1	1	SEE TABLE	PRESSURE SWITCH
25	1	1	28740	PLASTIC COVER
26	3	3	21789	POLY BEARING - ELEVATION CYLINDER
27	1	1	FF6801-0606	FITTING, ADAPTER, 90°, 6MOFS-6MORB
28	1	1	17012	BOOT: PRESSURE SWITCH
29	1	1	20896	TOP ANGLE SWITCH BLOCK

ITEM NO.	3215E	3515E	3516E	PART NUMBER
	QTY.			
24	1	-	-	17460-2200-21
	-	1	1	17460-2400-21

REFERENCE 28951 FOR REPLACEMENT PARTS DRAWING

VENTURO®

VENCO VENTURO INDUSTRIES LLC
CINCINNATI, OHIO

TITLE	DATE	SECTION
REPLACEMENT PARTS LIST - MECH	10-23-26B	C400
3215E/3515E/3516E	SUPERSEDES 06-17-25A	28952

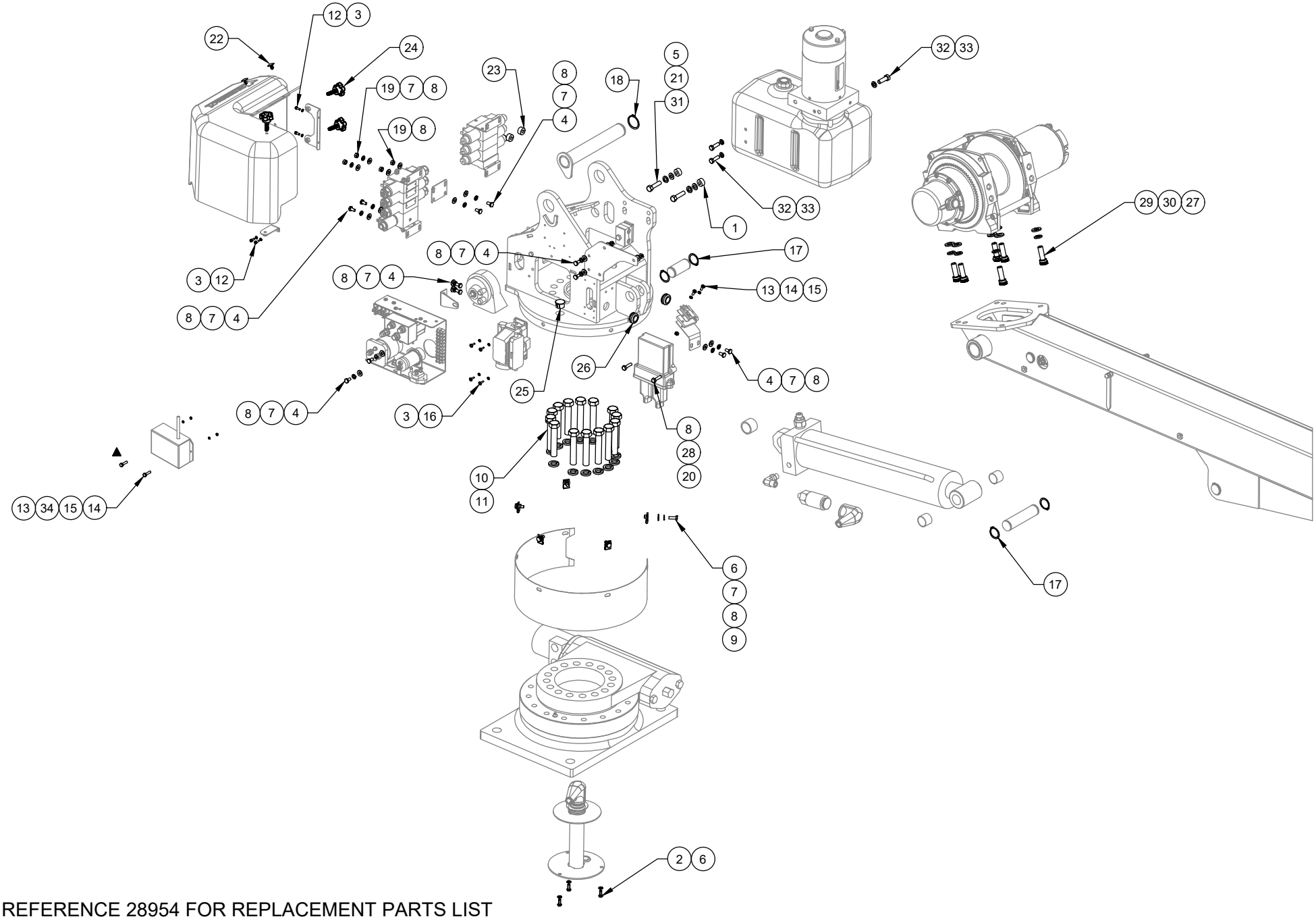

REFERENCE 28954 FOR REPLACEMENT PARTS LIST

VENTURO®

VENCO VENTURO INDUSTRIES LLC
CINCINNATI, OHIO

TITLE	DATE	SECTION
REPLACEMENT FASTENERS DWG - MECH	10-23-26C	C400
3215E/3515E/3516E	SUPERSEDES 09-23-25B	28953

	ITEM NO.	NON-PROP QTY.	PROP QTY.	PART NUMBER	DESCRIPTION
	1*	2	2	28804	ALUMINUM SPACER
	2	3	3	!LWSH-025-STAR-SS	LOCK WASHER, 1/4" STAR, SS
	3	8	8	!LWSH-08S	LOCK WASHER; #08, SS
	4	10	12	!HHCS02520050S	HEX HEAD CAP SCREW 1/4-20 X 1/2 LG, SS
	5	2	2	!FWSH-038	FLAT WASHER; 3/8, ZINC
	6	8	8	!HHCS02520075S	HEX HEAD CAP SCREW 1/4-20 X 3/4, SS
	7	16	18	!LWSH-025S	LOCK WASHER; 1/4, SS
	8	17	21	!FWSH-025S	FLAT WASHER; 1/4, SS
	9	5	5	!UNUT-02520-LKG	U-NUT; 1/4-20, LOCKING TYPE, ZINC
	10	14	14	!HHCS06311350-5	!HHCS; 5/8-11 X 3-1/2, GR 5, ZINC
	11	14	14	!LWSH-063	LOCK WASHER; 5/8, ZINC
	12	4	4	!SHCS#0832038S	SHCS, #8-32 X 0.38, SS
▲	13	4	4	!PHPMS#1024050S	PHILLIPS HEAD PAN, #10-24 X 1/2, SS
▲	14	4	4	!HNUT-#1024S	HEX NUT, 10-24, SS
▲	15	4	4	!LWSH-#10S	LOCK WASHER - #10, SS
	16	4	4	!PHPMS#0832050S	PHILIPS HEAD PAN, #8-32 X 1/2", SS
	17	4	4	!SRNG-113	SNAP RING - 1-1/8 - PLATED
	18	1	1	24842-138	SPIRAL RETAINING RING - 1-3/8 - STAINLESS
	19	2	4	!HNUT-02520S	HEX NUT 1/4-20, SS
	20	2	2	!HHCS02520100S	HEX HEAD CAP SCREW 1/4-20 X 1, SS
	21	2	2	!LWSH-038	LOCK WASHER; 3/8, ZINC
	22	2	2	28741	PUSH-IN RIVETS WITH RIBBED SHANK, 0.25
	23	2	2	28802	NYLON SPACER
	24	3	3	28742	KNOB, HAND, 5-POINT
	25	2	2	25019	HOLE PLUG - 7/8 OD
	26	2	2	20889	GROMMET: RUBBER, BLACK
	27	4	4	!FWSH-M12	M12 FLAT WASHER, ZINC
	28	2	2	!JNUT-02520NS	JNUT, NYLON INSERT, 1/4-20, SS
	29	4	4	25922	SHCS M12-175x35mm Gr.12.9, ZINC
	30	4	4	!LWSH-M12-8.8	M12 LOCK WASHER, ZINC
	31	2	2	!HHCS03816150N	HHCS 3/8-16 X 1-1/2 GR 5, ZINC, NYLON PATCH
	32**	3	3	!LWSH-031S	LOCK WASHER; 5/16, S/S
	33**	3	3	!HHCS3118100S	HEX HEAD CAP SCREW 5/16-18 X 1, S/S
▲	34	2	2	!FWSH-#10S	FLAT WASHER; #10, S/S

* : USED WITH KTI HPU ONLY
** : USED WITH BUCHER HPU ONLY

REFERENCE 28953 FOR REPLACEMENT PARTS DRAWING

VENTURO®

VENCO VENTURO INDUSTRIES LLC
CINCINNATI, OHIO

TITLE	DATE	SECTION
REPLACEMENT FASTENERS LIST - MECH	10-23-26F	C400
3215E/3515E/3516E	SUPERSEDES 10-13-25E	28954

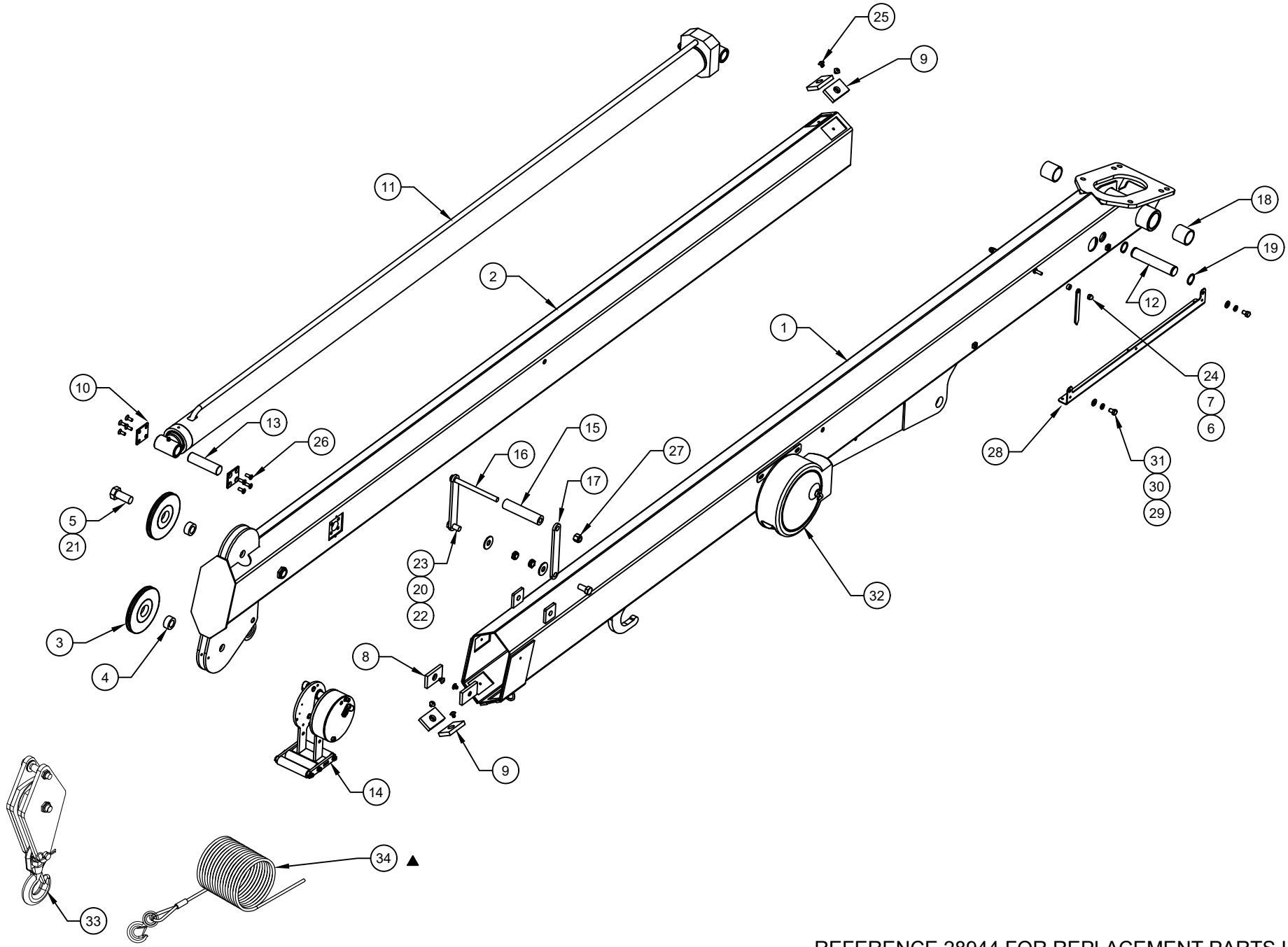

REFERENCE 28944 FOR REPLACEMENT PARTS LIST

VENTURO®

VENCO VENTURO INDUSTRIES LLC
CINCINNATI, OHIO

TITLE	DATE	SECTION
REPL PARTS & FASTENERS DWG - 28673 BOOM	02-26-25A	C400
3516E	SUPERSEDES 09-12-24	28943

ITEM NO.	QTY.	PART NUMBER	DESCRIPTION
1	1	28665	PRIMARY BOOM WELDMENT
2	1	23702	SECONDARY BOOM WLDMNT
3	2	21630	CABLE SHEAVE - PLASTIC
4	2	20536	SPACER - 20537 SHEAVE
5	1	17059-4	SHEAVE AXLE
6	2	22490	SPACER, BOOM ARROW 1/2" O.D.
▲ 7	2	13459-1	BOOM ARROW 3-3/16 LONG
8	2	23710-2	BOOM PAD 1.5 X 2.5 - .31 THK
9	4	23710-3	BOOM PAD 1.5 X 2.5 - .38 THK
10	2	23706	CYLINDER PIN RETAINING PLATE
11	1	23692	EXTNSION CYL 2.50" BORE X 78" STROKE
12	1	23708	INBOARD EXT CYL PIN
13	1	23709	OUTBOARD EXT CYL PIN
14	1	27469-L-C-00	ASSY; COMPACT A2B
15	1	21560	ROLLER,UHMW GUIDE
16	1	!HHCS04414550	HEX HEAD CAP SCREW - 7/16-14 X 5-1/2", ZINC
17	2	21936	FLAT,MOUNT;WIRE ROPE GUIDE
18	2	21206	POLY BEARING - PRIMARY BOOM PIVOT
19	2	!SRNG-100	RETAINING RING - 1" SHAFT DIA.
20	2	!FWSH-050	FLAT WASHER 1/2", ZINC
21	1	!LNUT-07510	LOCKNUT 3/4-10, ZINC
22	2	!JNUT-05013N	1/2-13 NYLON INSERT JAM NUT, ZINC
23	2	!HHCS05013100-5	HEX HEAD CAP SCREW 1/2-13 X 1 LG GR5, ZINC
24	2	!ANUT-02520S	ACORN NUT 1/4-20 S/S
25	6	!THCS02520038S	TRUSS HEAD PHILLIPS SCREW 1/4-20 X 3/8" S/S
26	8	!CACS02520050S	CACS; 1/4-20 X 1/2", S/S
27	1	!LNUT-04414	NYLON INSERT LOCK NUT - 7/16-14, ZINC
28	1	26940-2	HEX BOOM CABLE GUARD BRACKET
29	2	!FWSH-031S	FLAT WASHER; 5/16", S/S
30	2	!LWSH-031S	LOCK WASHER; 5/16", S/S
31	2	!HHCS03118050S	HEX HEAD CAP SCREW - 5/16 X 1/2" S/S
32	1	26577-1-20	COMPLETE CORD REEL REELCRAFT ALL MODELS
33	1	20670	LOAD BLOCK ASSEMBLY
34	1	21639	WIREROPE; 1/4 X 65' W/ EYEHOOK & SAFETY LATCH

REFERENCE 28943 FOR REPLACEMENT PARTS DRAWING

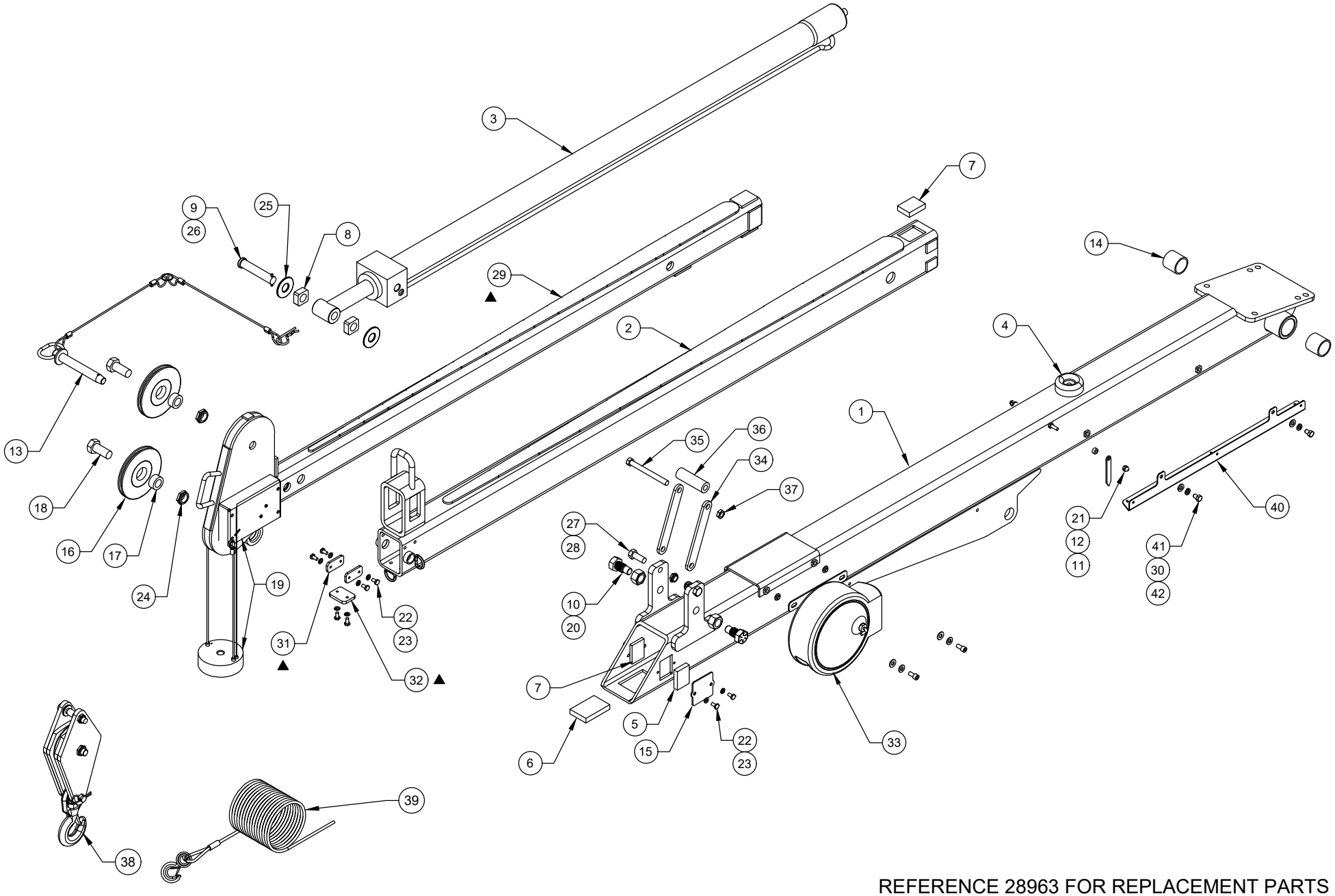

REFERENCE 28963 FOR REPLACEMENT PARTS LIST

VENTURO®

VENCO VENTURO INDUSTRIES LLC
CINCINNATI, OHIO

TITLE	DATE	SECTION
REPL PARTS & FASTENERS DWG - 28684 BOOM	05-05-26C	C400
3215E/3515E	SUPERSEDES 03-10-25B	28962

REPLCEMENT PARTS LIST; 28684 BOOM

	ITEM NO.	QTY.	PART NUMBER	DESCRIPTION
	1	1	28680	PRIMARY BOOM WELDED ASSEMBLY
▲	2	1	28016	SECONDARY BOOM ASSEMBLY
	3	1	21754	BOOM EXTENSION CYLINDER
	4	1	20285	BUMPER - BOOM
	5	1	21209	BOOM PAD - 1-1/2 X 2 X 7/16
	6	1	21208	BOOM PAD - 2 X 3 X 1/2
	7	2	21538	BOOM PAD - 1-1/2 X 2 X 1/2
	8	2	21734	THRUST ROLLER
	9	1	13401-2A	ROD PIVOT PIN - 3/4 x 3-3/4
	10	2	17487	PIVOT BOLT
	11	2	22490	SPACER, BOOM ARROW 1/2" O.D.
	12	2	13459-1	BOOM ARROW 3-3/16 LONG
	13	1	23042-B-14-14	ASSY; PIN / LANYARD
	14	2	21206	POLY BEARING - PRIMARY BOOM PIVOT
	15	2	21528	BOOM PAD CAP
	16	2	21630	CABLE SHEAVE
	17	2	20536	SPACER
	18	2	17059-4	SHEAVE AXLE
	19	1	28860-1	ANTI-TWO-BLOCK HOUSING ASSEMBLY
	20	2	!HNUT07516	HEX NUT; 3/4-16, ZINC
	21	2	!ANUT-02520S	ACORN NUT 1/4-20 SS
	22	10	!HHCS02520050	HEX HEAD CAP SCREW 1/4-20 X1/2 LG, ZINC
	23	10	!LWSH-025	LOCKWASHER, 1/4", ZINC
	24	2	!LNUT-07510	LOCKNUT 3/4-10, ZINC
	25	2	!FWSH-075	FLAT WASHER 1/4", ZINC
	26	1	!RPIN-016125	ROLL PIN, 5/32 X 1-1/4
	27	2	!HHCS05013125-5	HEX HEAD CAP SCREW 1/2-13NC X 1-1/4 LG, ZINC
	28	2	!JNUT-05013N	1/2-13 NYLON INSERT JAM NUT, ZINC
▲	29	1	21534	TERTIARY BOOM ASSEMBLY
	30	2	!FWSH-031S	FLAT WASHER; 5/16", SS
▲	31	2	23551	SIDE HARD STOP
▲	32	1	23550	BOTTOM HARD STOP
	33	1	26577-1-20	CORD REEL ASSEMBLY
	34	2	21936	FLAT,MOUNT;WIRE ROPE GUIDE
	35	1	!HHCS04414450	HEX HEAD CAP SCREW 7/16-14 X 4-1/2 LG, ZINC
	36	1	27088	ROLLER, UHMW GUIDE
	37	1	!JNUT-04414N	NYLON LOCK-JAM NUT - 7/16-14, ZINC
	38	1	20670-2	LOAD BLOCK ASSEMBLY FOR 3215E
		1	20670	LOAD BLOCK ASSEMBLY FOR 3515E
	39	1	21639	WIREROPE; 1/4 X 62' W/ EYEHOOK & SAFETY LATCH
	40	1	26720	RECTANGULAR BOOM CABLE GUARD BRACKET
	41	2	!LWSH-031S	LOCK WASHER; 5/16", S/S
	42	2	!HHCS03118050S	HEX HEAD CAP SCREW - 5/16 X 1/2 LONG S/S

REFERENCE DWG #28962 FOR REPLACEMENT PARTS DRAWING

ANTI-TWO-BLOCK ASSY

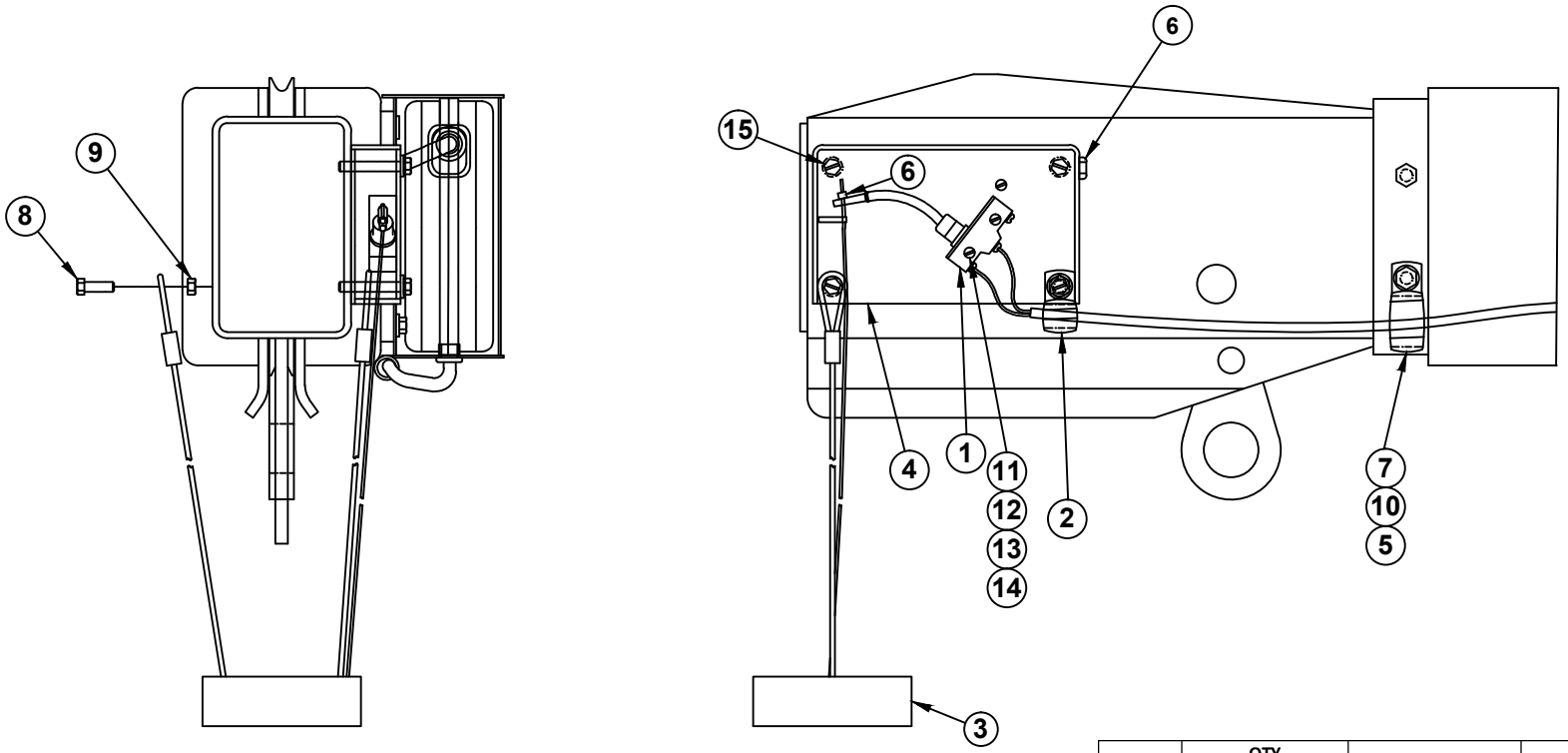

ITEM	QTY		PART NO.	DESCRIPTION
	NO DASH	-1		
1	1	1	19376	LIMIT SWITCH
2	1	1	19269	CABLE CLAMP - SMALL
▲ 3	1	1	19377-1	CABLE WEIGHT ASSY
4	1	1	21291	ANTI TWO-BLOCK HOUSING ASSEMBLY
5	1	-	!LWSH-025	LOCK WASHER - 1/4"
6	1	1	19302	SET COLLAR - 3/32"
7	1	-	19275	CABLE CLAMP - LARGE
8	1	1	!HHCS02520075-5	HEX HEAD CAP SCREW - 1/4-20 x 3/4" GR. 5
9	1	1	!HNUT-02520	HEX NUT - 1/4-20
10	1	-	!ANUT-02520	ACORN NUT - 1/4-20
11	2	2	!PHMS#632125	PAN HEAD MACHINE SCREW - #6-32 x 1 1/4"
12	2	2	!HNUT-#0632	HEX NUT - #6-32
13	2	2	!FWSH-#06	FLAT WASHER - #6
14	2	2	!LWSH-#06	LOCK WASHER - #6
15	4	4	!HHCS02520175	HEX HEAD CAP SCREW - 1/4-20 x 1 3/4"

NO DASH: 4016E & 4516E

-1: 3215E & 3515E

VENTURO®

VENCO VENTURO INDUSTRIES LLC
CINCINNATI, OHIO

TITLE	DATE	SECTION
ANTI-2-BLOCK REPL PARTS DWG & LIST	08-18-25A	C400
3215E, 3515E, 4016E, 4516E	SUPERSEDES 04-16-25	28861

COMPACT A2B - 27469-* - REPLACEMENT PARTS LIST

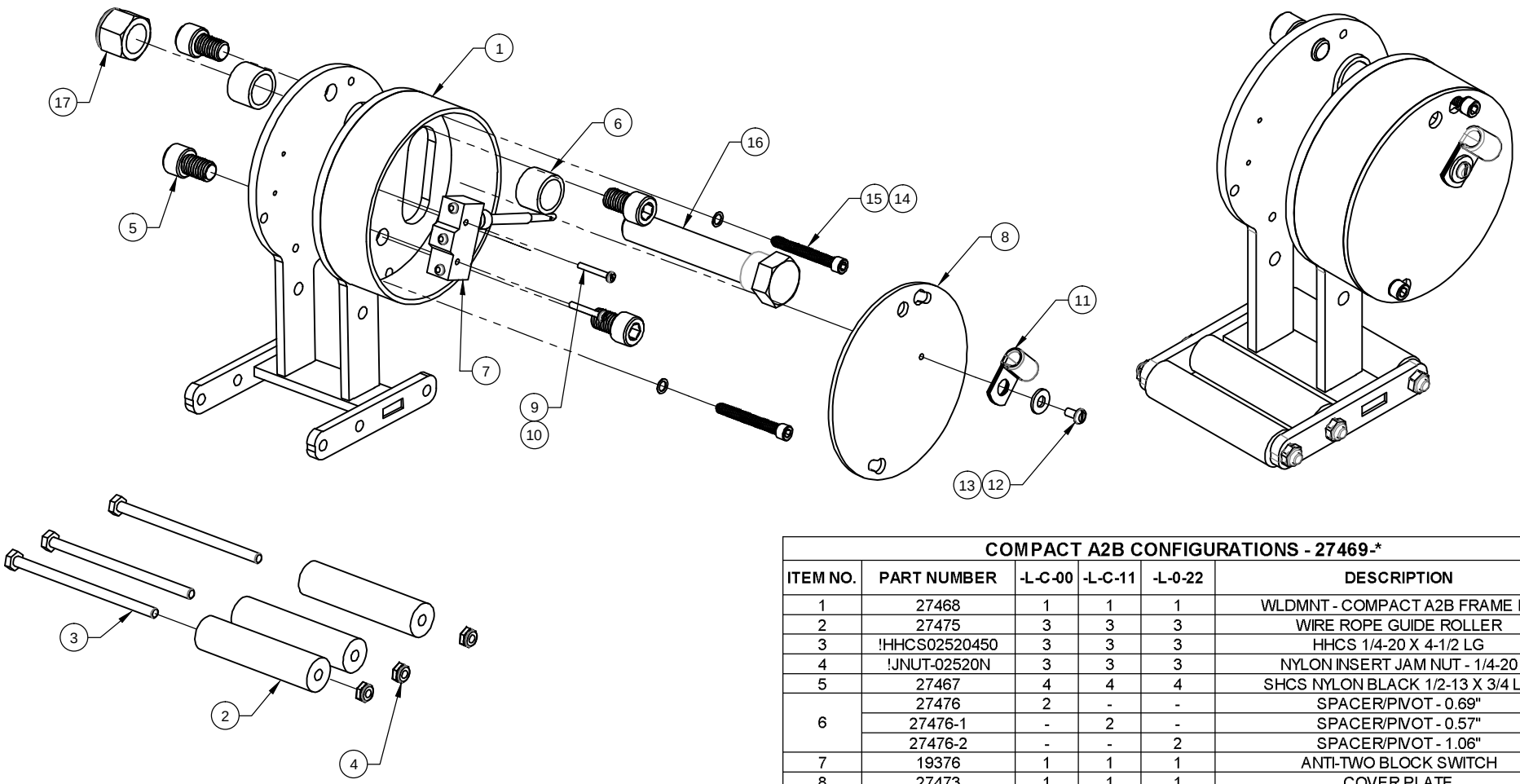

COMPACT A2B CONFIGURATIONS - 27469-*					
ITEM NO.	PART NUMBER	-L-C-00	-L-C-11	-L-0-22	DESCRIPTION
1	27468	1	1	1	WLDMNT - COMPACT A2B FRAME LH
2	27475	3	3	3	WIRE ROPE GUIDE ROLLER
3	!HHCS02520450	3	3	3	HHCS 1/4-20 X 4-1/2 LG
4	!JNUT-02520N	3	3	3	NYLON INSERT JAM NUT - 1/4-20
5	27467	4	4	4	SHCS NYLON BLACK 1/2-13 X 3/4 LG
6	27476	2	-	-	SPACER/PIVOT - 0.69"
	27476-1	-	2	-	SPACER/PIVOT - 0.57"
	27476-2	-	-	2	SPACER/PIVOT - 1.06"
7	19376	1	1	1	ANTI-TWO BLOCK SWITCH
8	27473	1	1	1	COVER PLATE
9	!PHCS#0632100	2	2	2	PHILLIPS HEAD CAP SCREW 6-32 X 1 LONG
10	!LWSH-#06	2	2	2	LOCK WASHER - 6
11	19269	1	1	1	WIRE CLAMP, 3/8 ID VIBRATION DAMPING
12	!PHCS#1032038	1	1	1	PAN HEAD CAP SCREW 10-32 X 3/8 LONG
13	!FWSH-025	1	1	1	FLAT WASHER - 1/4
14	!SHCS02520200SS	2	2	2	SHCS, 1/4-20 X 2.00 LONG, STAINLESS STEEL
15	23379	2	2	2	WASHER, NYLON, BLACK, .375" O.D. X .25" I.D.
16	28362	1	1	-	COMPACT A2B CUT-OUT CAM WELDED ASSY.
	!HHCS07510450	-	-	1	HHCS, 3/4-10 X 4.50 LONG, GR.5
17	LNUT-07510	1	1	1	NYLON INSERT LOCK NUT - 3/4-10

VENTURO®

VENCO VENTURO INDUSTRIES LLC
CINCINNATI, OHIO

TITLE	DATE	SECTION
REPLACEMENT PARTS LIST	7-10-24A	C400
COMPACT A2B - 27469-*	SUPERSEDES 06-11-24	26942

REPLACEMENT PARTS LIST - 20670 LOAD BLOCK

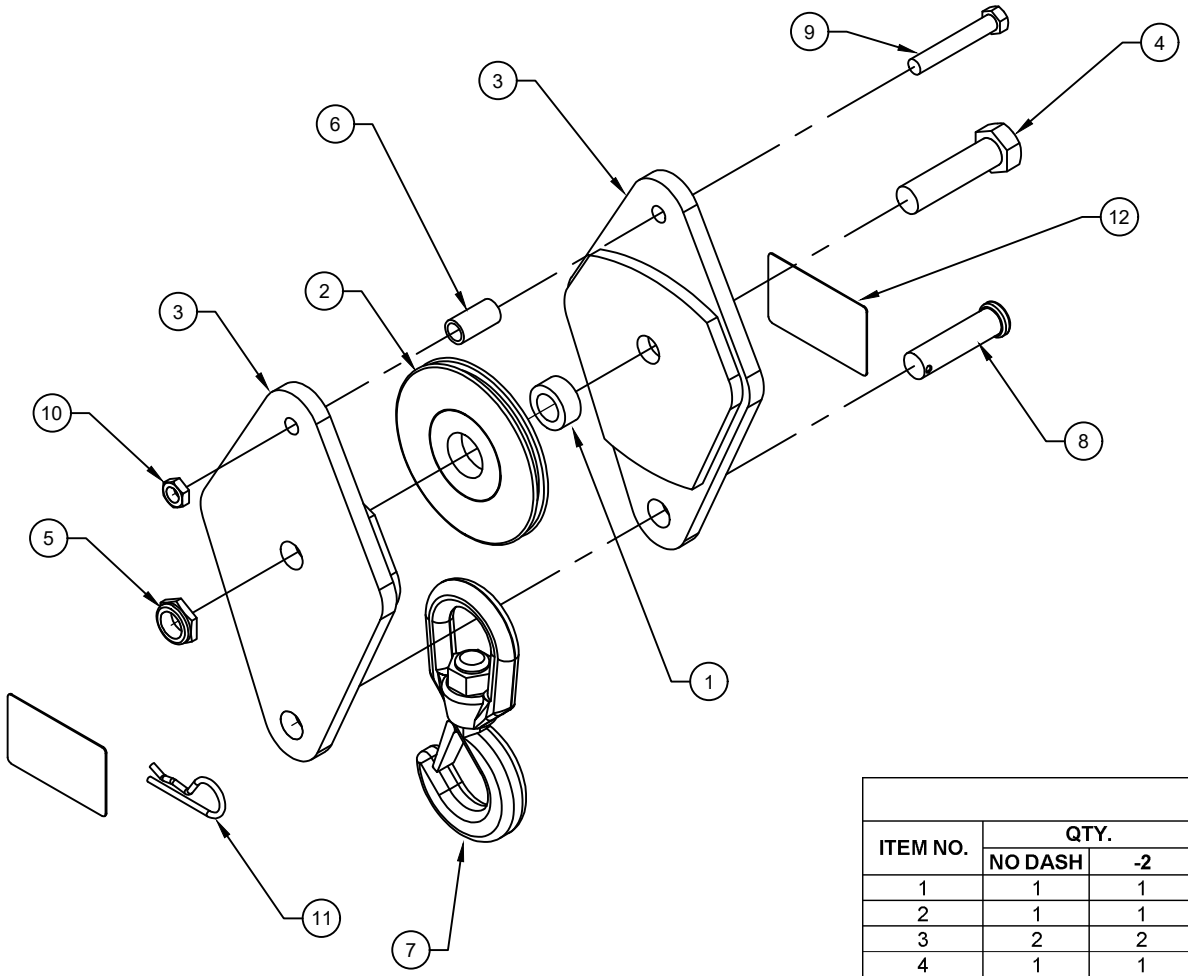

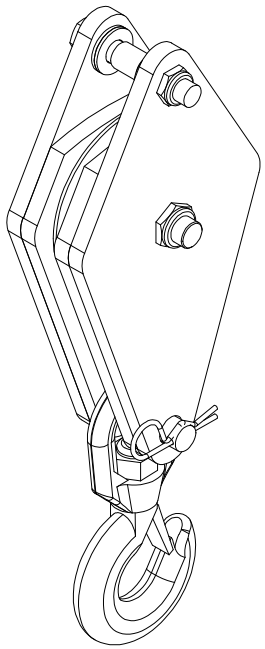

LOAD BLOCK ASSEMBLY 20670				
ITEM NO.	QTY.		PART NUMBER	DESCRIPTION
	NO DASH	-2		
1	1	1	20536	SPACER - 20537 SHEAVE
2	1	1	21630	CABLE SHEAVE - PLASTIC
3	2	2	20671	SIDE PLATE WELDED ASSEMBLY
4	1	1	!HHCS07510300	HEX HEAD CAP SCREW 3/4-10 X 3" ZINC
5	1	1	!JNUT-07510N	NYLON LOCK-JAMNUT 3/4-10, ZINC
6	1	1	20674	SPACER
7	1	1	17291	SWIVEL HOOK W/ SAFETY LATCH
8	1	1	20675	CLEVIS PIN - 3/4" X 2-3/4"
9	1	1	!HHCS04414275	HEX HEAD CAP SCREW 7/16-14 X 2-3/4", ZINC
10	1	1	!JNUT-04414N	NYLON LOCK-JAM NUT - 7/16-14, ZINC
11	1	1	21-07	HAIRPIN COTTER
12	-	2	27007-03a	DECAL LOAD BLOCK, 3200 LBS.
	2	-	27007-04a	DECAL LOAD BLOCK, 3500 LBS.

VENTURO®

VENCO VENTURO INDUSTRIES LLC
CINCINNATI, OHIO

TITLE	DATE	SECTION
REPLACEMENT PARTS LIST -20670 LOAD BLOCK	09-13-24	C400
3215E/351*E	SUPERSEDES -	28946

28700 ELECTRICAL COMPONENT ASSEMBLY

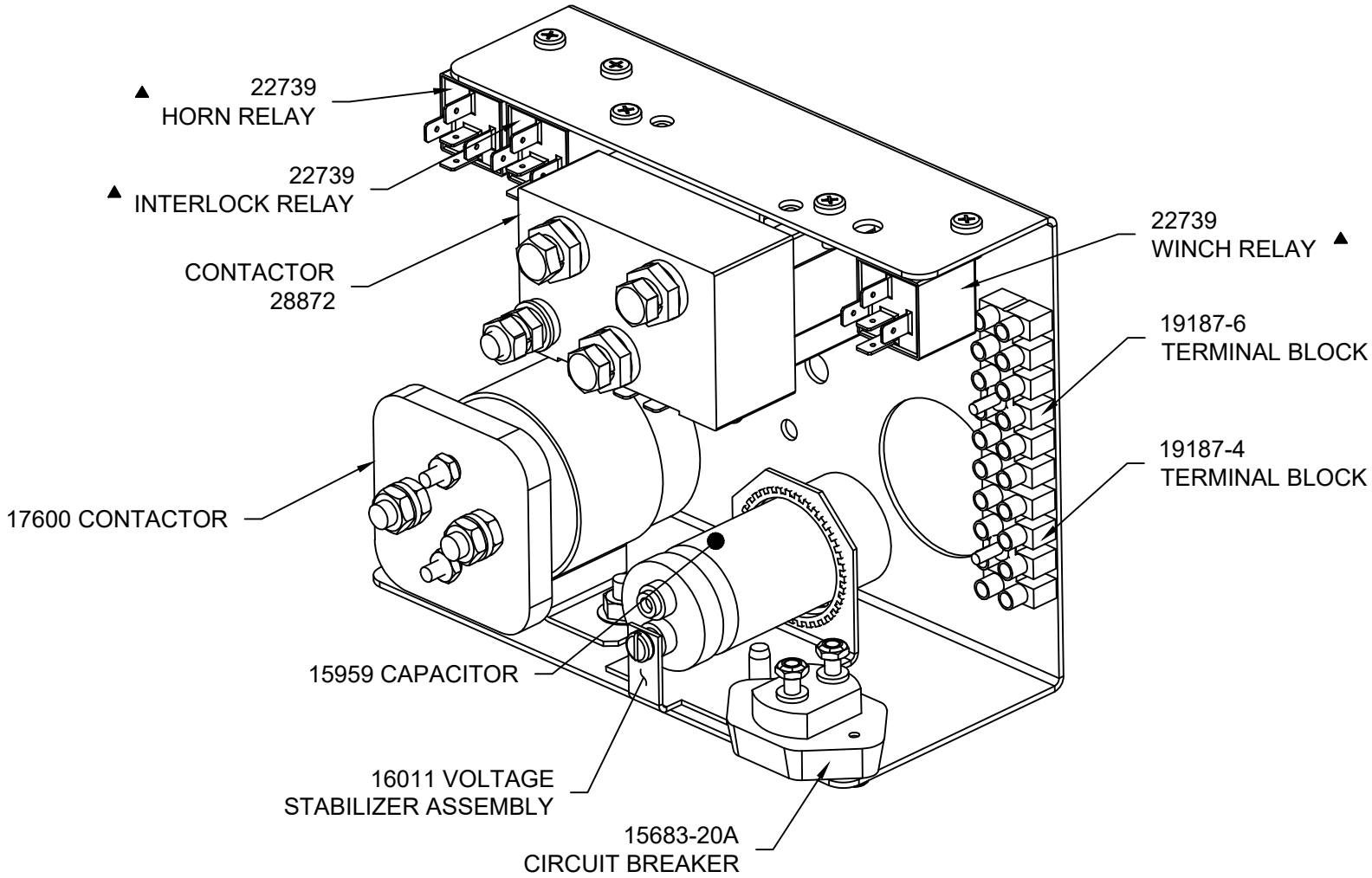

VENTURO®

VENCO VENTURO INDUSTRIES LLC
CINCINNATI, OHIO

TITLE	DATE	SECTION
ELECTRICAL COMPONENT ASSEMBLY	10-07-25A	C400
3215E/351*E/40**E/45**E	SUPERSEDES 04-09-24	28835

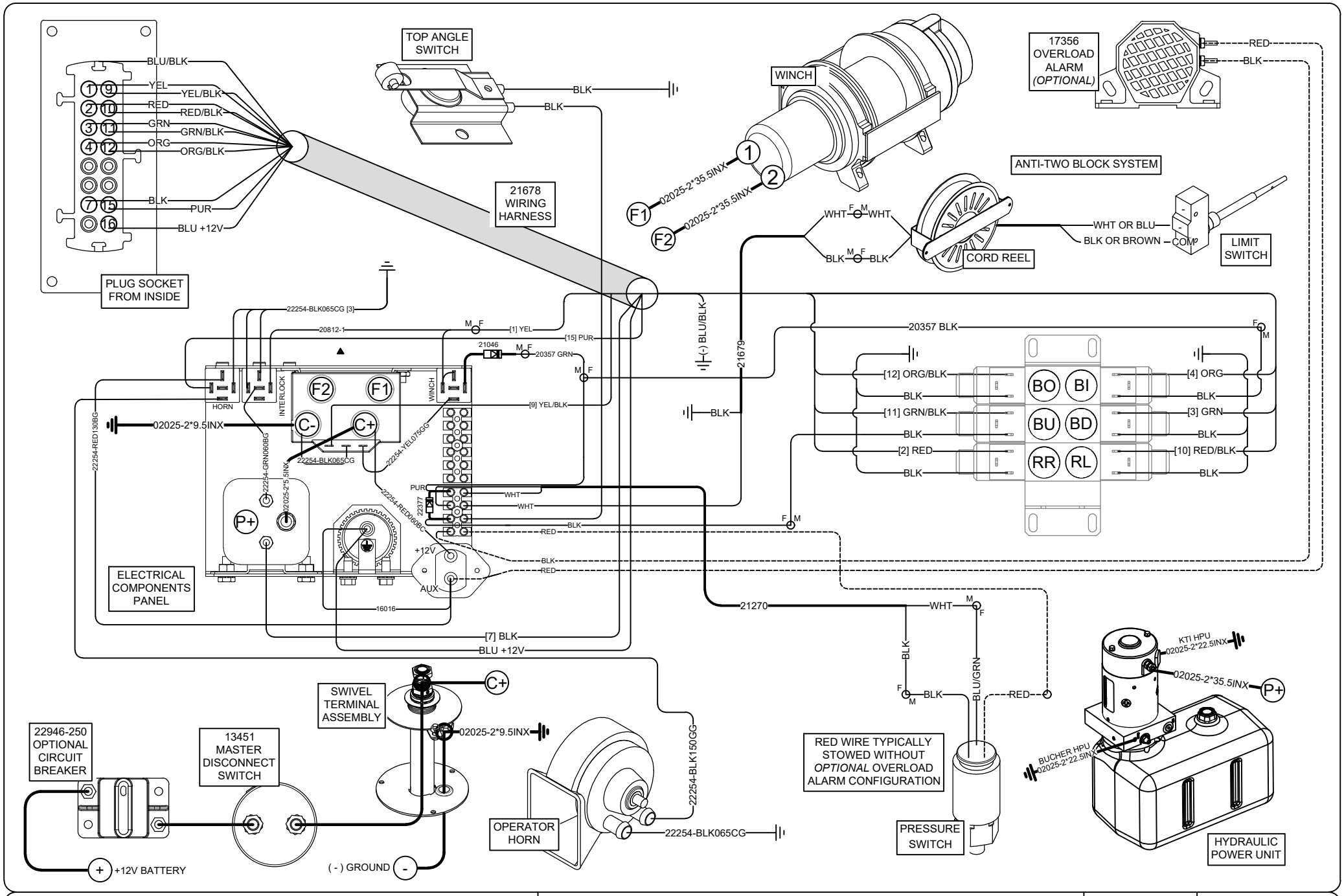

VENTURO®

VENCO VENTURO INDUSTRIES LLC
CINCINNATI, OHIO

TITLE	DATE	SECTION
WIRING DIAGRAM	10-08-25E	C400
45**E/40**E/351*E/3215E NON PROPORTIONAL	SUPERSEDES 09-23-25D	28836

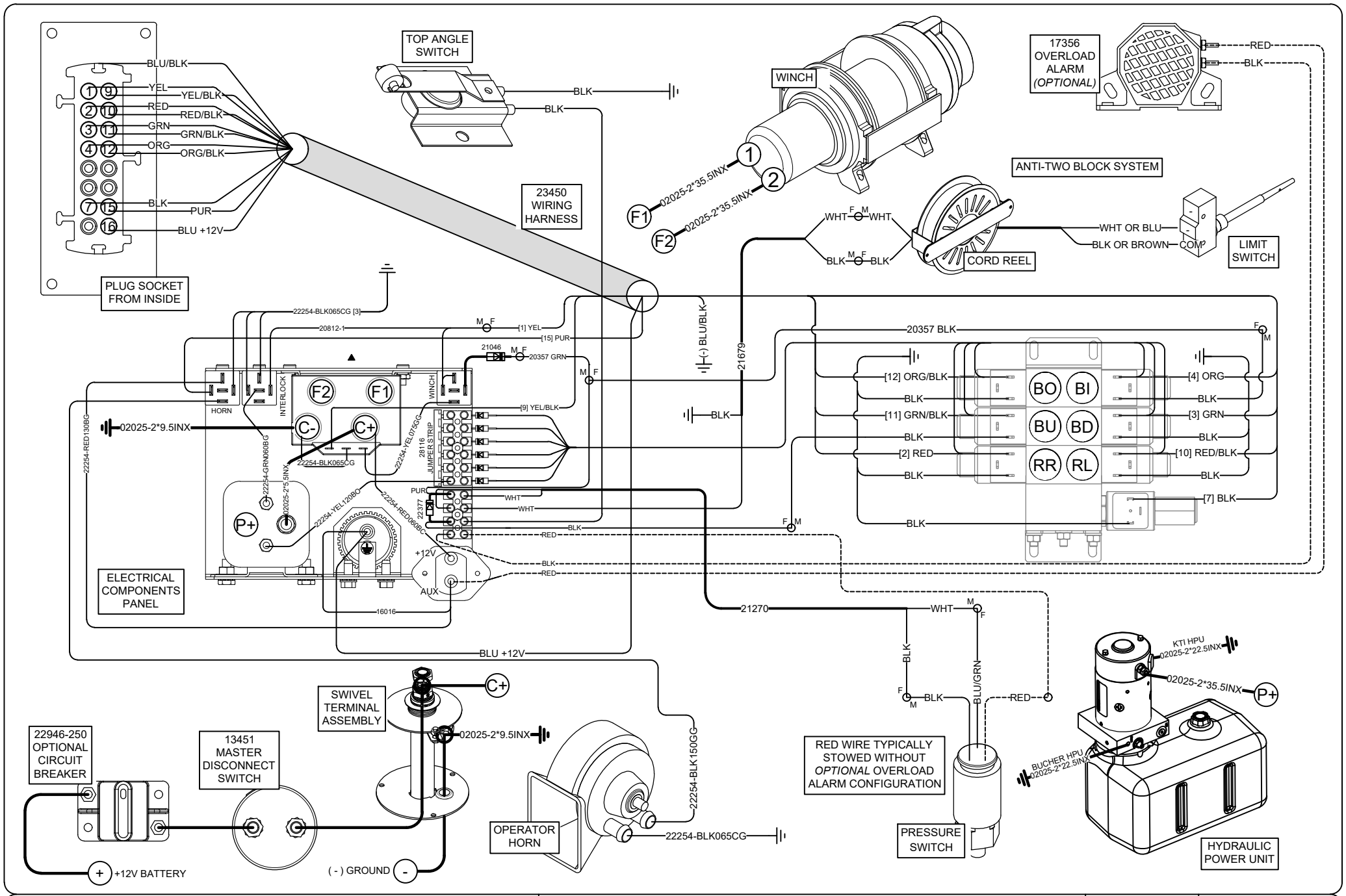

VENTURO®

VENCO VENTURO INDUSTRIES LLC
CINCINNATI, OHIO

TITLE	DATE	SECTION
WIRING DIAGRAM	10-09-25E	C400
45**E/40**E/351*E/3215E PROPORTIONAL	SUPERSEDES 09-23-25D	28837

2-Pole Slip-ring Replacement Parts

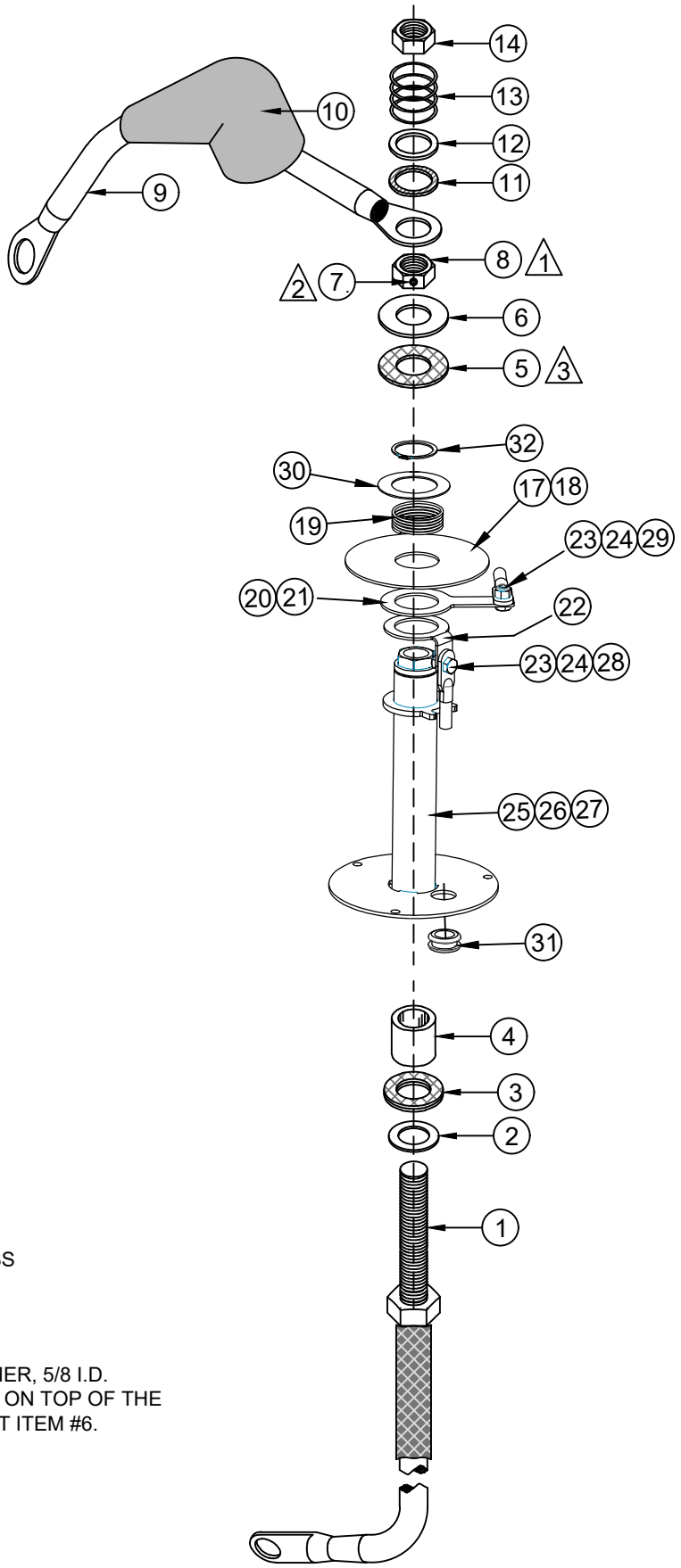

1. TORQUE TO 15 FT-LBS
2. LOCTITE 242 BLUE
3. ITEM #8, FIBER WASHER, 5/8 I.D. 'MUST' SIT DIRECTLY ON TOP OF THE INVERTED FLARE NUT ITEM #6.

VENTURO®

VENCO VENTURO INDUSTRIES LLC
CINCINNATI, OHIO

TITLE	DATE	SECTION
REPL. PARTS ILLUSTRATION	04-23-24	C400
ET CRANES	SUPERSEDES -	28843

16780		ALL CRANES	2010E	3215E TO 4520E	5020E & 6020E	SWIVEL TERMINAL ASSEMBLIES
		16780-KIT	16780-2P6	16780-2P8	16780-2P25	
#	PART		QUANTITY			DESCRIPTION
1	16783	-	1	1	1	PIGTAIL AND STUD ASSEMBLY
2	12534-5	1	-	-	-	ZINC BUSHING; 5/8" I.D. X 1" O.D. X 14 GAUGE
3	14357-1	2	-	-	-	FIBER WASHER; 5/8" I.D. X 1 1/16" O.D. X 1/16"
4	14233	1	-	-	-	INSULATING BUSHING; 5/8" I.D. X 7/8" O.D. X 7/8"
5	14357-2	1	-	-	-	FIBER WASHER; 5/8" I.D. X 1 1/4" O.D. X 1/16"
6	!FWSH-063SAE	1	-	-	-	FLAT WASHER; 5/8" SAE
7	!SHCS02528025KC	1	-	-	-	SET SCREW W/ KNURLED CUP; 1/4"-28 X 1/4"
8	21273	1	-	-	-	BRASS JAM NUT; 5/8"-11
9	26035-2	-	-	-	-	PIGTAIL; SWIVEL TERMINAL
10	17012	-	-	-	-	RUBBER BOOT; SWIVEL TERMINAL
11	5612-162-62	1	-	-	-	TEFLON WASHER
12	5714-113-62	1	-	-	-	BRASS WASHER
13	LC-098K-00	1	-	-	-	SPRING; 0.845" O.D. X 0.098" WIRE X 1.00 F.L.
14	!JNUT-06311N	1	-	-	-	JAM NUT; 5/8"-11, NYLON NUT
15	LOCTITE-24205	1	-	-	-	REMOVABLE THREAD LOCKER; 0.5ML
16	19368	1	-	-	-	IDWG; 16780 SWIVEL TERMINAL
17	27456	-	1	-	-	UHMW WATER SHIELD, (ET6K ONLY)
18	27456-1	-	-	1	1	UHMW WATER SHIELD, (ET8 - ET36)
19	27461	-	1	1	1	SPRING, (-) SLIP-RING ASSY.
20	27441-1	-	-	1	1	COPPER SLIP-RING, (ET8 - ET36)
21	27441	-	1	-	-	COPPER SLIP-RING, (ET6K ONLY)
22	27449-1	-	1	1	1	BRASS SLIP-RING (ET6 - ET36)
23	!HHCS03118075-B	-	1	1	1	BRASS HHCS
24	!HNUT-03118-B	-	1	1	1	BRASS NYLOC NUT
25	23255	-	1	-	-	SLIP-RING, WELDED ASSY, ET6K
26	23255-1	-	-	1	-	SLIP-RING, WELDED ASSY, ET8 - 18K(X)
27	23255-2	-	-	-	1	SLIP-RING, WELDED ASSY, ET25 - 36K(X)
28	02025-2*96.5INX	-	1	1	1	(-) WELDING CABLE ASSY, BRASS SLIP-RING
29	02025-2*22.5INX	-	1	1	1	(-) WELDING CABLE ASSY, COPPER SLIP-RING
30	27463	-	1	1	1	SHIM, WIDE RIM, 18GA, 2-1/4 O.D. X 1-1/2 I.D.
31	20889	-	1	1	1	RUBBER GROMMET
32	!SRNG-150	-	1	1	1	SNAP-RING, EXTERNAL, 1-1/2"
33	16780-KIT	-	1	1	1	KIT; SWIVEL TERMINAL, CONTAINS H/W, ETC.

21990 PENDANT; 4 FUNCTION NON-PROP ET CRANES, E-STOP AND HORN

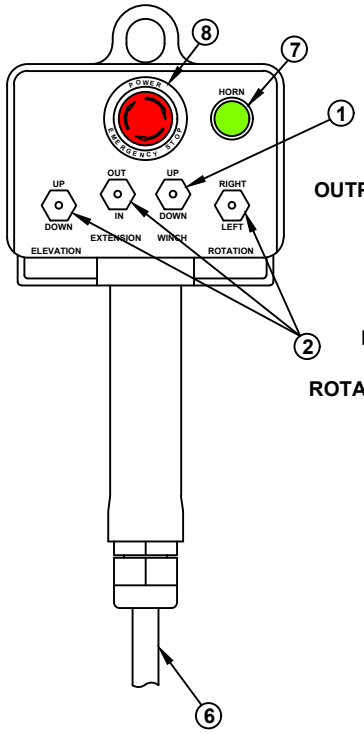

(INSIDE VIEW OF PENDANT CONTROL W/ REAR COVER REMOVED)

AUX +12V - RED / BLACK (8)

+12V - RED (16)

E-STOP

HORN

OUTPUT - YELLOW / RED (15)

WINCH DOWN - YELLOW / BLACK (9)

ROTATION LEFT - BLUE (2)

ROTATION RT - BLUE / BLACK (10)

LEFT / RIGHT ROTATION

UP / DOWN WINCH

OUT / IN EXTENSION

UP / DOWN ELEVATION

BOOM IN - ORANGE / BLACK (12)

HYD POWER - BROWN / RED (7)

BOOM DOWN - BROWN / BLACK (11)

BOOM UP - BROWN (3)

WINCH UP - YELLOW (1)

BOOM OUT - ORANGE (4)

NOTE 1:
WIRE TERMINALS TO BE INSTALLED 'AFTER' ROUTING REPLACEMENT CORD ASSY THROUGH PENDANT HEAD AND PLUG HOUSING.

NOTE 2:
STOW OR CUT BACK UNUSED WIRES.

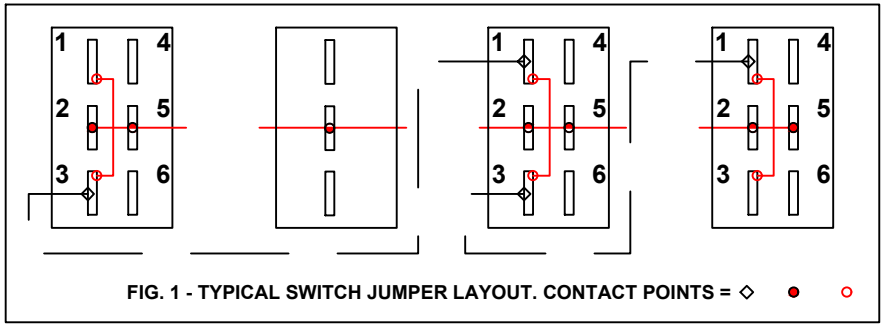

FIG. 1 - TYPICAL SWITCH JUMPER LAYOUT. CONTACT POINTS = ◇ ● ○

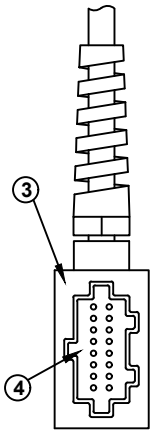

16-PIN PLUG ASSY.

BLACK - GROUND

YELLOW / BLACK - WD

BLUE / BLACK - RR

BROWN / BLACK - BD

ORANGE / BLACK - BI

YELLOW / RED - HORN

RED - 12V+

YELLOW - WU

BLUE - RL

BROWN - BU

ORANGE - BO

BROWN / RED - HYD POWER UNIT CONTACTOR

RED / BLACK - AUX 12V+

16-PIN PLUG - BACKSIDE VIEW

ITEM	QTY	PART NO.	DESCRIPTION
8	1	22156	SWITCH; E-STOP
7	1	22155	SWITCH; PUSHBUTTON, HORN
6	1	22135	KIT; REPLACEMENT CORD ASSY
5	-	-	-
4	1	22472	INSERT; MALE, 16 + 1 POLE
3	1	22471	PLUG CASE; 16 + 1 POLE
2	3	22152	SWITCH; DPDT, MOMENTARY
1	1	22081	SWITCH; SPDT, MOMENTARY

VENTURO®

VENCO VENTURO LLC
CINCINNATI, OHIO

TITLE	DATE	SECTION
REPLACEMENT PARTS DWG & LIST	09-10-26A	C400
21990 PENDANT; 4 FUNCTION NON-PROP ET CRANES E/STOP, AND HORN	SUPERSEDES 04-22-24	28840

21986-ET/-HT RADIO; NON-PROP, NON-CAN, NO ENG CTRL, W/ HORN

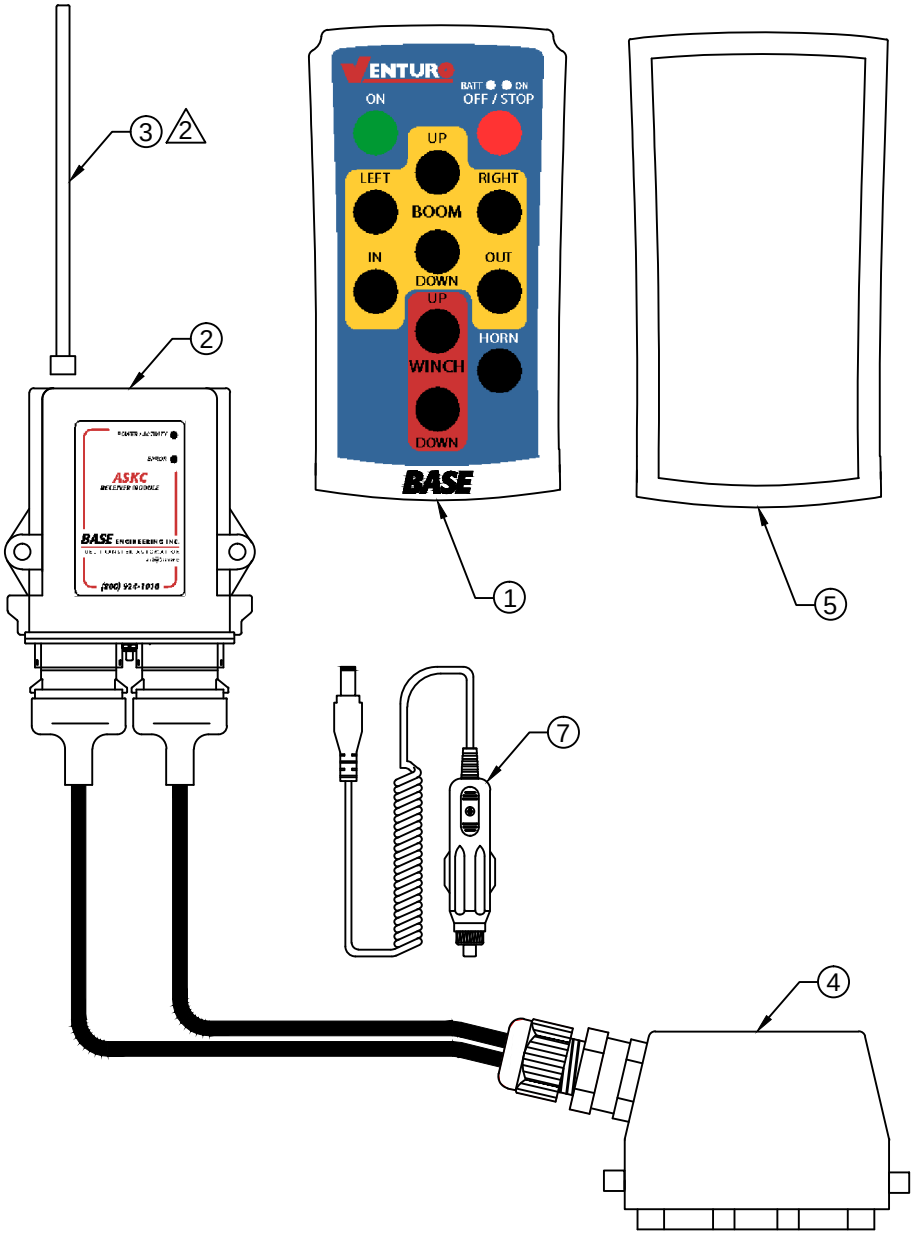

COMPONENTS		
ITEM NO.	PART NO.	DESCRIPTION
1	21986-TX	TRANSMITTER
2	21986-RX-ET	RECEIVER - ET CRANES
	21986-RX-HT	RECEIVER - HT CRANES
3	21986-ANT	ANTENNA
4	21986-HN	HARNESS
5	21986-CASE	CASE
6	22910-BATT	BATTERY
7	22910-CHGR	CHARGER

1 21986-RX-** DOES NOT INCLUDE 21986-ANT

2 ASKCEX1200RX (INTRODUCED 07/2025) HAS PROVISION FOR EXTERNAL WHIP ANTENNA; EARLIER ASKC1100RX & ASKC1200RX CANNOT USE EXTERNAL ANTENNA

VENTURO®

VENCO VENTURO INDUSTRIES LLC
CINCINNATI, OHIO

TITLE	DATE	SECTION
REPLACEMENT PARTS DWG & LIST	08-05-25	C400
ET NON-PROPORTIONAL CRANES	SUPERSEDES -	23529

24470 RADIO; NON PROP, NON-CAN, NO ENG CNTRLS, E-STOP/HORN

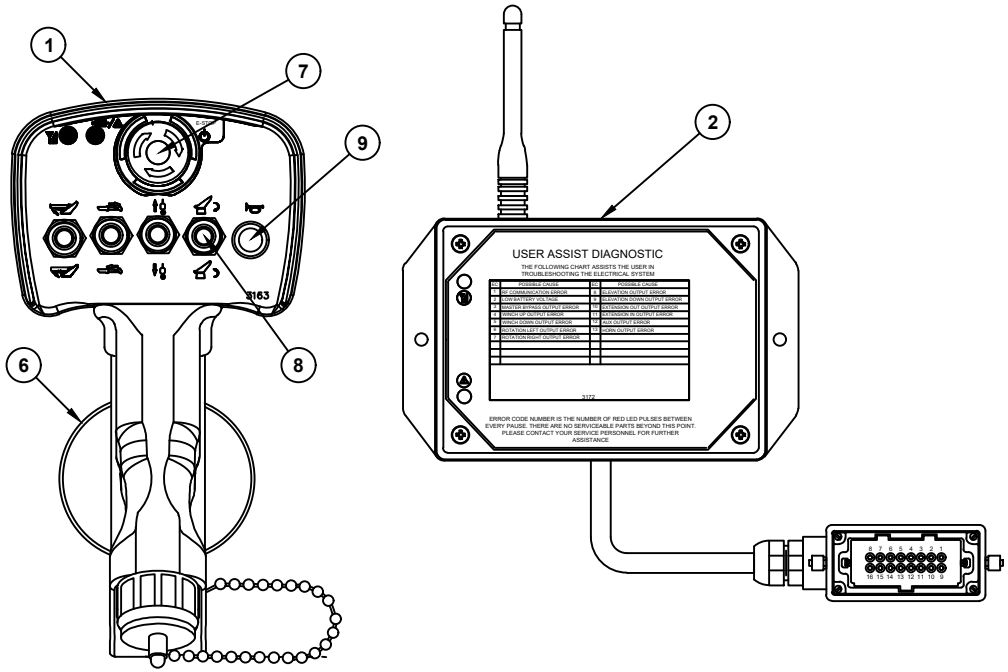

24470 RADIO SYSTEM REPLACEMENT PARTS		
ITEM #	PART#	DESCRIPTION
1	24470-TX	ET & HT NON PROP RADIO TRANSMITTER
2	24470-RX-HT	RADIO RECEIVER; HT PROGRAMMED, NON PROP
	24470-RX-ET	RADIO RECEIVER; ET PROGRAMMED, NON PROP
3	23908-CHG	CHARGER, TRANSMITTER, 12V CIG / AUX PLUG
4	24470-CCR	CAN CHARGER RECEPTACLE
5	24470-CRC	TRANSMITTER CAN PORT CAP
6	22089	MAGNET ASSEMBLY
7	24470-ESS	EMERGENCY STOP SWITCH
8	24470-TOG	TOGGLE SWITCH (ON)-OFF-(ON), SCREW CONNECT TERMS, W/BOOT
9	22155	PUSH BUTTON SWITCH, GREEN
10	23908-BAT	BATTERY; TX
*11	24470-ADP	110 VOLT A/C WALL CHARGER

* OPTIONAL ACCESSORY, NOT INCLUDED

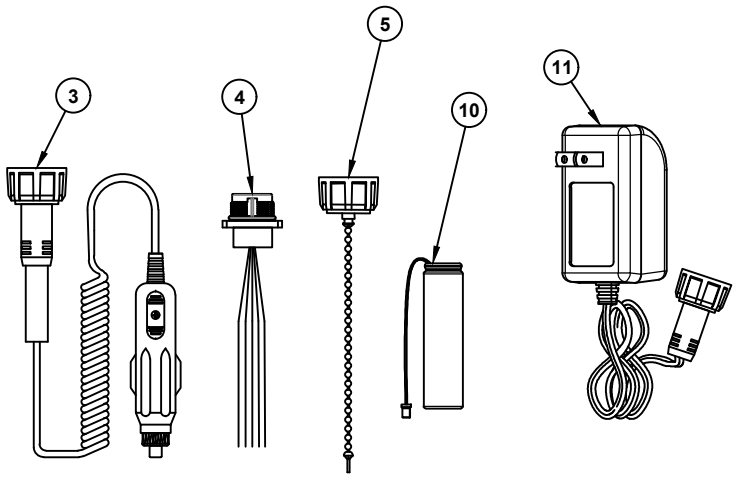

VIEW FROM CONNECTING FACE

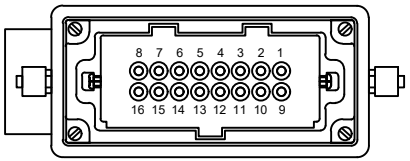

16 PIN CONNECTOR WIRING		
PIN#	WIRE COLOR	FUNCTION
1	YELLOW	WINCH UP OUTPUT
2	BLUE	ROTATION LEFT OUTPUT
3	BROWN	ELEVATION UP OUTPUT
4	ORANGE	EXTENSION OUT OUTPUT
5	-	-
6	-	-
7	BROWN / RED	MASTER BYPASS OUTPUT
8	RED / BLACK	AUX POWER +12V
9	YELLOW / BLACK	WINCH DOWN OUTPUT
10	BLUE / BLACK	ROTATION RIGHT OUTPUT
11	BROWN / BLACK	ELEVATION DOWN OUTPUT
12	ORANGE / BLACK	EXTENSION IN OUTPUT
13	-	-
14	-	-
15	YELLOW / RED	HORN OUTPUT
16	RED	SYSTEM POWER +12V
-	BLACK	SYSTEM GROUND (SHELL / HOUSING)

VENTURO®

VENCO VENTURO LLC
CINCINNATI, OHIO

TITLE	DATE	SECTION
REPLACEMENT PARTS DWG & LIST	10-21-26A	C400
▲ NON-PROPORTIONAL CRANES	SUPERSEDES 07-16-26	35310

21988 PENDANT; PROP, NO ENG CNTRL, E-STOP / HORN

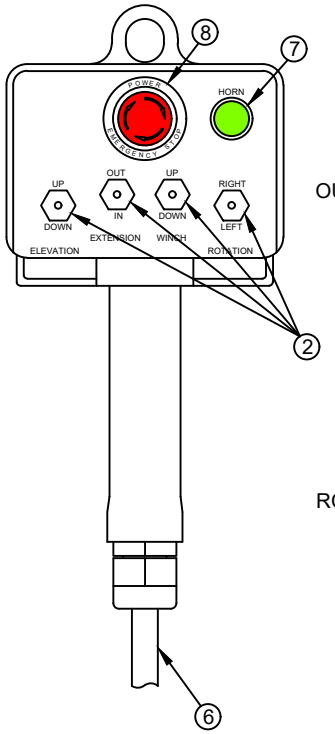

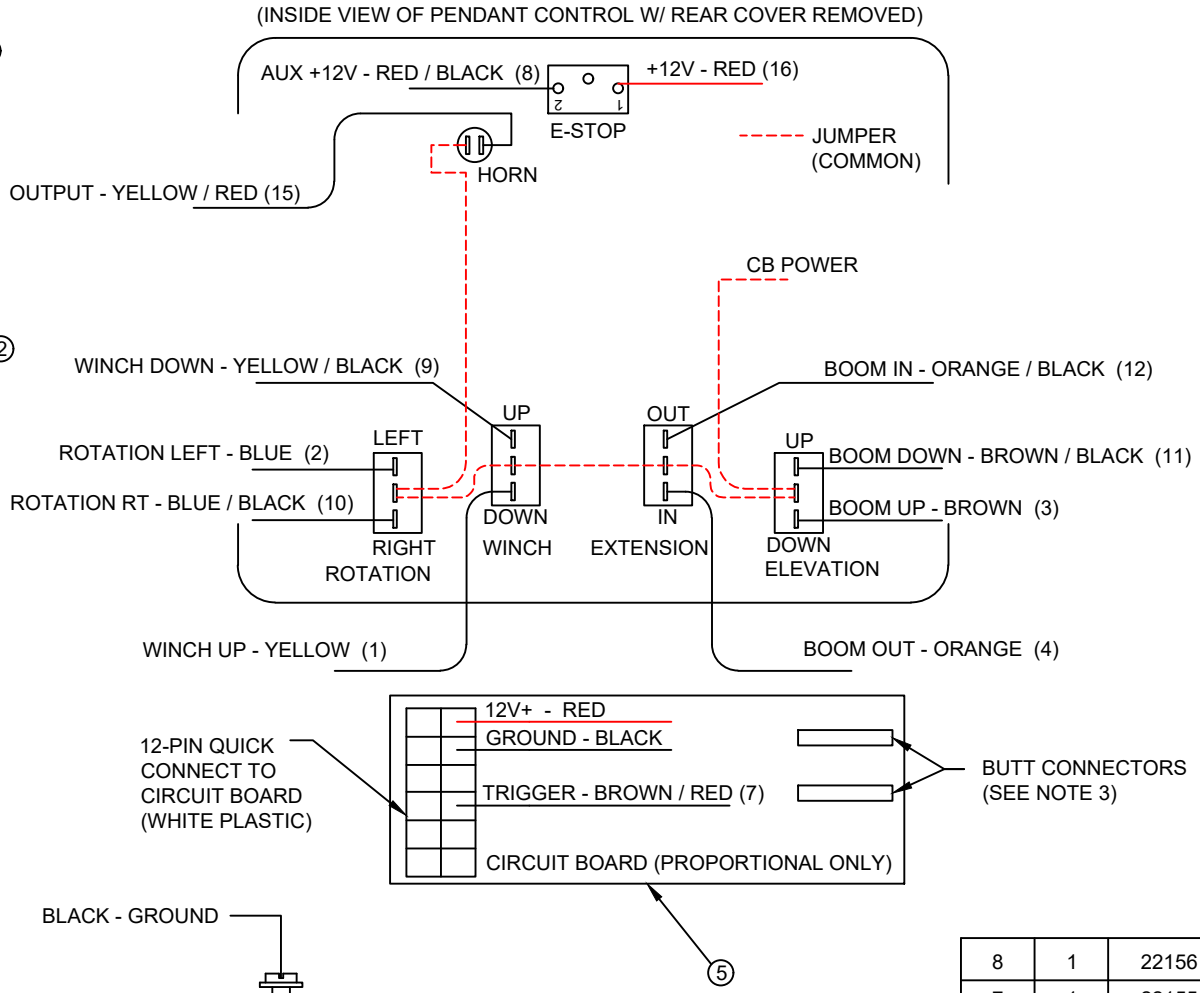

NOTE 1:
WIRE TERMINALS TO BE INSTALLED 'AFTER' ROUTING REPLACEMENT CORD ASSY THROUGH PENDANT HEAD AND PLUG HOUSING.

NOTE 2:
STOW OR CUT BACK UNUSED WIRES.

NOTE 3:
WHEN REPLACING CORD ASSY, CUT BLACK AND BLACK / RED WIRES FROM 12-PIN QUICK CONNECT AND INSTALL 'BUTT CONNECTORS'; MATCH UP BLACK TO BLACK WIRES AND BLACK / RED TO BLACK / RED WIRES FROM REPLACEMENT CORD ASSY.

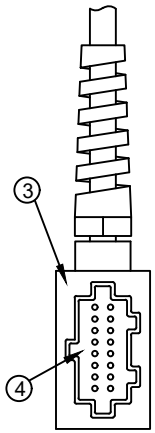

16-PIN PLUG ASSY.

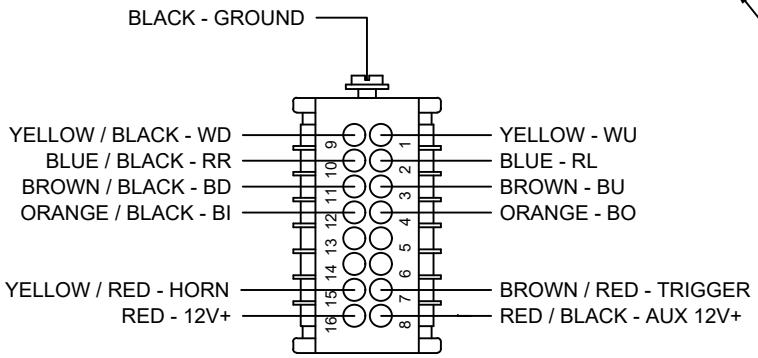

16-PIN PLUG - BACKSIDE VIEW

ITEM	QTY	PART NO.	DESCRIPTION
8	1	22156	SWITCH; E-STOP
7	1	22155	SWITCH; PUSHBUTTON, HORN
6	1	22135	KIT; REPLACEMENT CORD ASSY
5	1	22082	CIRCUIT BOARD; PROP VALVE CONTROLLER
4	1	22472	INSERT; MALE, 16 + 1 POLE
3	1	22471	PLUG CASE; 16 + 1 POLE
2	4	22081	SWITCH; SPDT, MOMENTARY
1	-	-	-

VENTURO®

VENCO VENTURO INDUSTRIES LLC
CINCINNATI, OHIO

TITLE	DATE	SECTION
REPLACEMENT PARTS DWG & LIST	04-22-24	C400
21988 PNDNT; PROP, NO ENG CNT, ESTP/HRN	SUPERSEDES -	28841

22158 RADIO; PROP, NON-CAN, NO ENG CNTRLS, E-STOP/HORN

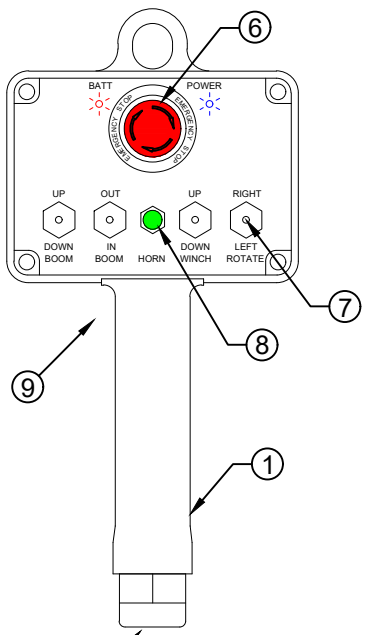

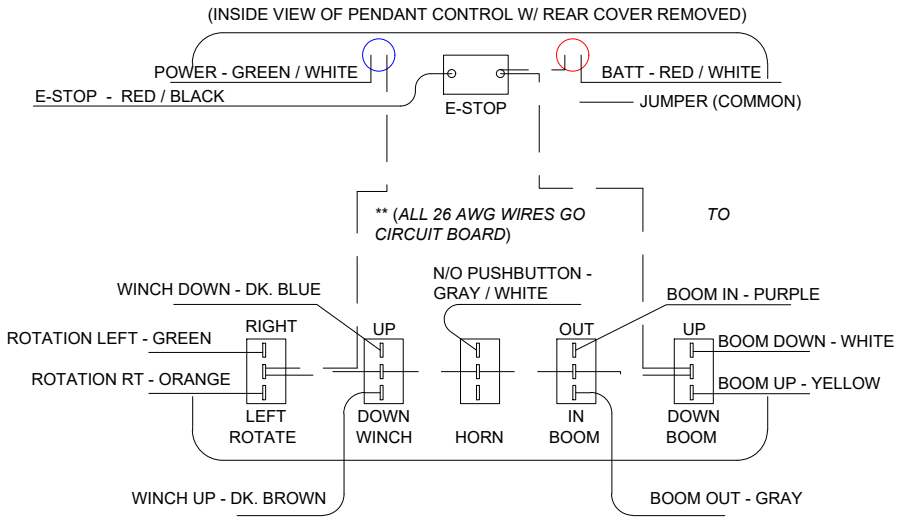

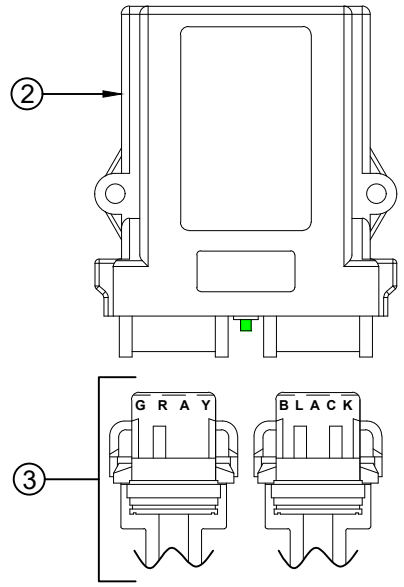

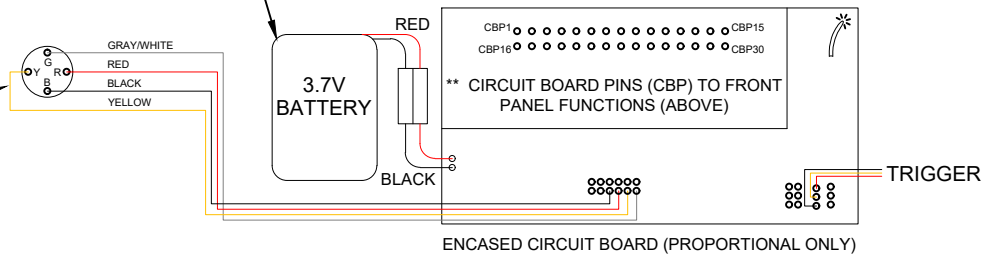

CABLE 1 = GRAY CONNECTOR
CABLE 2 = BLACK CONNECTOR

16-PIN PLUG - BACKSIDE VIEW

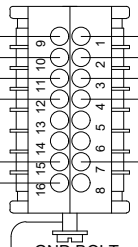

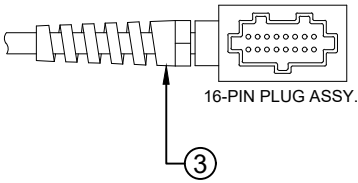

NOTE:
Pin 14 (White / Black) factory default to AUX. ON/OFF
If using a 2-channel THROTTLE, Pin 14 will be THROTTLE DOWN.

COMPONENTS		
ITEM NO.	PART NO.	DESCRIPTION
1	22158-TX	TRANSMITTER
2	22158-RX	RECEIVER
3	21983-HN	HARNESS
4	22965-BATT	BATTERY
5	22965-CHGR	CHARGER (NOT SHOWN)
6	21983-STP	E-STOP BUTTON
7	21983-TOG	FUNCTION TOGGLE
8	21983-HOR	HORN BUTTON & BOOT
9	23234	PROP TRIGGER (NOT SHOWN)
10	21983-CR	CHARGE RECEPTACLE ▲

VENTURO®

VENCO VENTURO LLC
CINCINNATI, OHIO

TITLE	DATE	SECTION
REPLACEMENT PARTS DWG & LIST	09-22-26C	C400
ET PROPORTIONAL SERIES CRANES	SUPERSEDES 09-04-25B	23786

24471 RADIO; ET PROP, E-STOP, & HORN

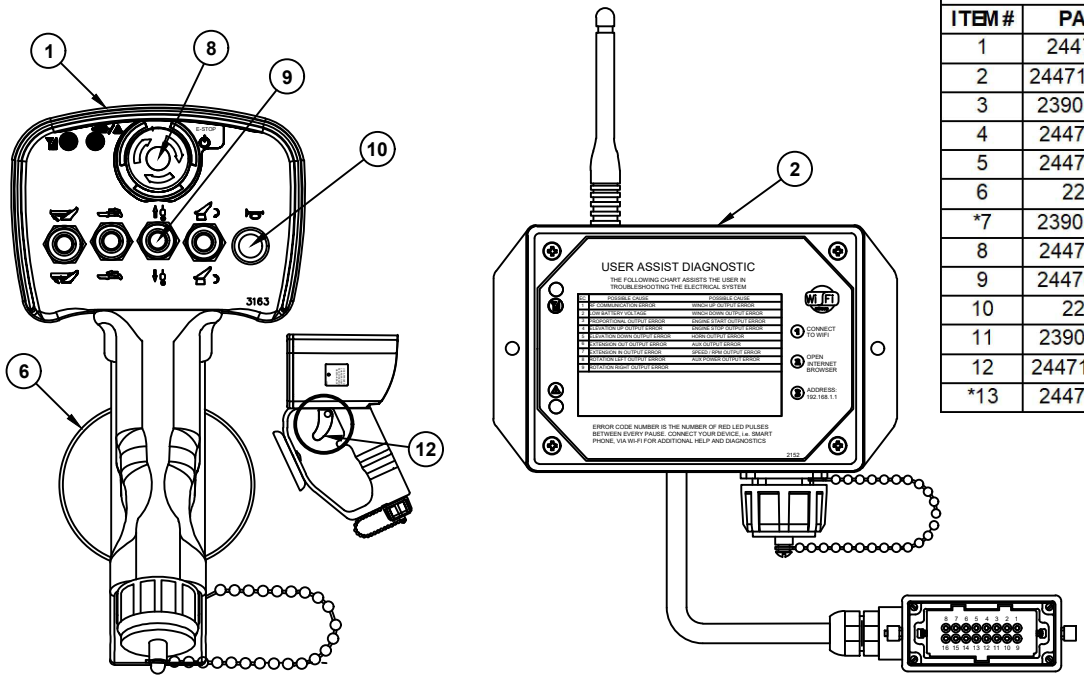

24471 RADIO SYSTEM REPLACEMENT PARTS		
ITEM #	PART#	DESCRIPTION
1	24471-TX	ET & HT NON PROP RADIO TRANSMITTER
2	24471-RX-ET	RADIO RECEIVER; ET PROGRAMMED, NON PROP
3	23908-CHG	CHARGER, TRANSMITTER, 12V CIG / AUX PLUG
4	24470-CCR	CAN CHARGER RECEPTACLE
5	24470-CRC	TRANSMITTER CAN PORT CAP
6	22089	MAGNET ASSEMBLY
*7	23908-CAN	CAN CABLE - 25 FT
8	24470-ESS	EMERGENCY STOP SWITCH
9	24470-TOG	TOGGLE SWITCH (ON)-OFF-(ON), SCREW CONNECT TERMS, W/BOOT & HARDWARE
10	22155	PUSH BUTTON SWITCH, GREEN
11	23908-BAT	BATTERY; TX
12	24471-TRGA	TRIGGER ASSEMBLY
*13	24470-ADP	110 VOLT A/C WALL CHARGER

*OPTIONAL ACCESSORY, NOT INCLUDED

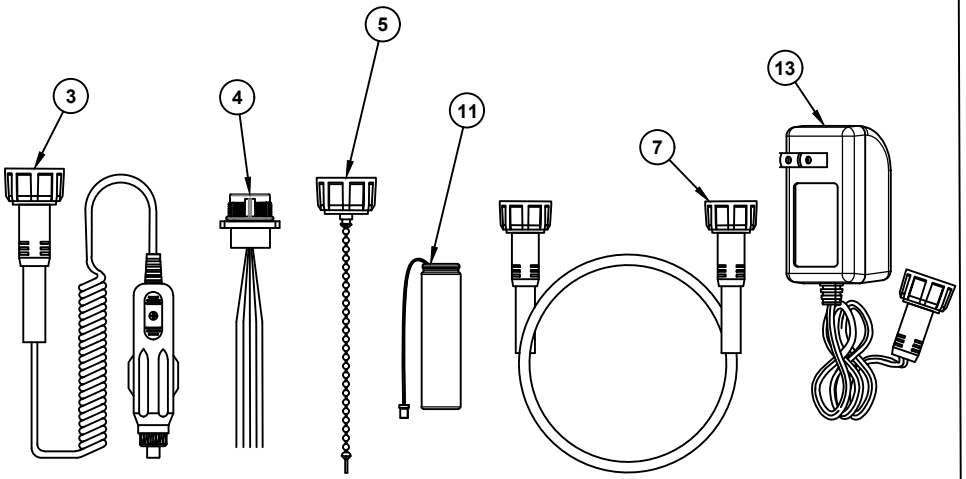

VIEW FROM CONNECTING FACE

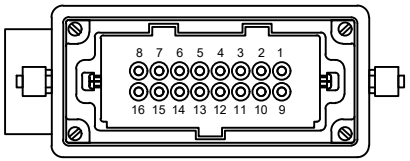

16 PIN CONNECTOR WIRING		
PIN#	WIRE COLOR	FUNCTION
1	YELLOW / BLACK	WINCH UP 12V OUTPUT
2	ORANGE / BLACK	BOOM CCW ROTATION 12V OUTPUT
3	ORANGE	BOOM ELEVATION UP 12V OUTPUT
4	BROWN	BOOM EXTENSION 12V OUTPUT
5	BLACK / RED	ENGINE START 12V OUTPUT
6	BROWN / RED	ENGINE RPM 12V OUTPUT
7	BLUE	PROPORTIONAL OUTPUT
8	RED / BLUE	AUX +12V OUTPUT
9	BROWN / BLACK	WINCH DOWN 12V OUTPUT
10	BLUE / BLACK	BOOM ROTATION RIGHT 12V OUTPUT
11	YELLOW	BOOM ELEVATION LOWER 12V OUTPUT
12	RED / BLACK	BOOM RETRACT 12V OUTPUT
13	BLUE / RED	ENGINE STOP 12V OUTPUT
14	YELLOW / RED	AUX POWER 12V OUTPUT
15	ORANGE / RED	HORN 12V OUTPUT
16	RED	SYSTEM POWER +9-30V
-	BLACK	SYSTEM GROUND (SHELL / HOUSING)

VENTURO®

VENCO VENTURO LLC
CINCINNATI, OHIO

TITLE	DATE	SECTION
REPLACEMENT PARTS DWG & LIST	07-16-26	C400
ET PROPORTIONAL SERIES CRANES	SUPERSEDES -	35320

HYDRAULIC COMPONENTS DRAWING

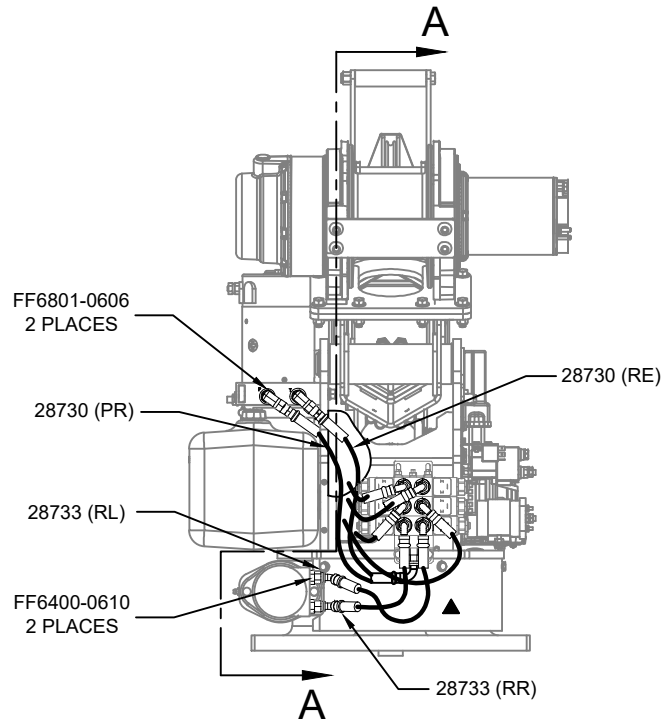

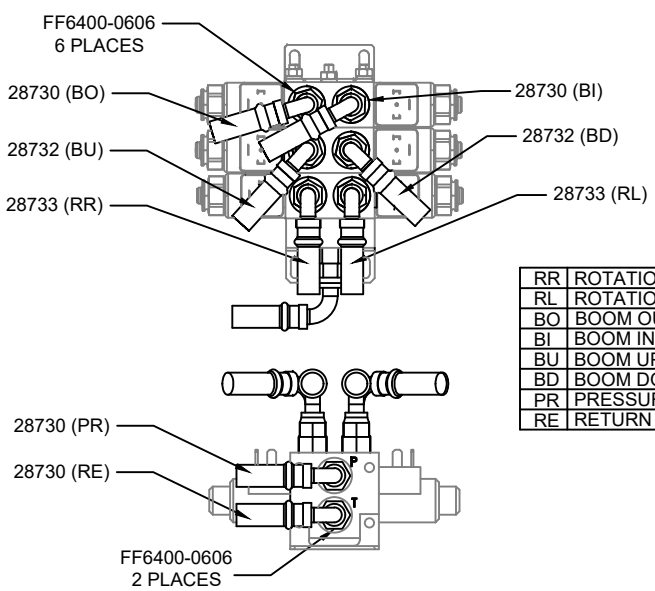

NON-PROPORTIONAL

RR	ROTATION RIGHT
RL	ROTATION LEFT
BO	BOOM OUT
BI	BOOM IN
BU	BOOM UP
BD	BOOM DOWN
PR	PRESSURE
RE	RETURN

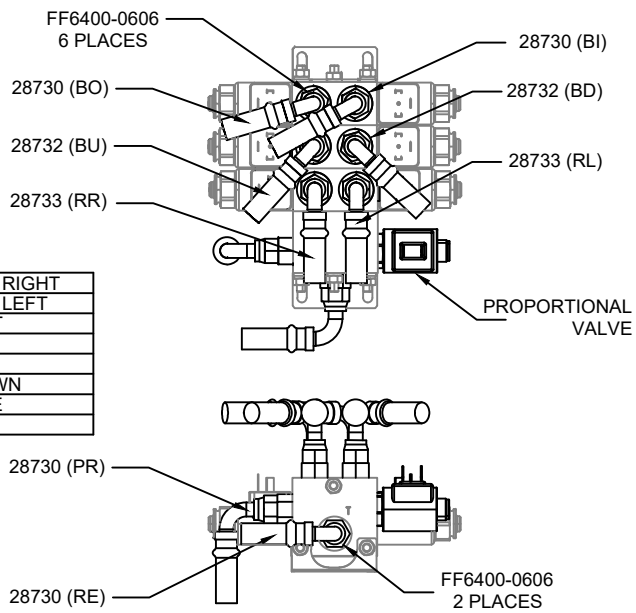

PROPORTIONAL

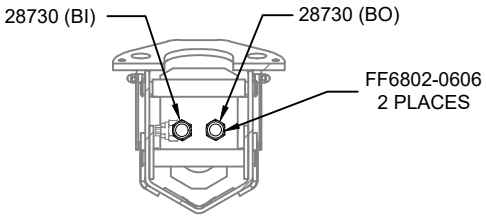

SECTION VIEW B-B
20' BOOM

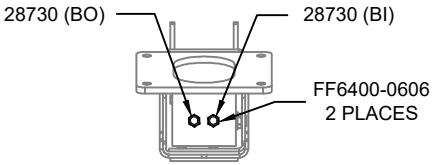

SECTION VIEW B-B
16' BOOM

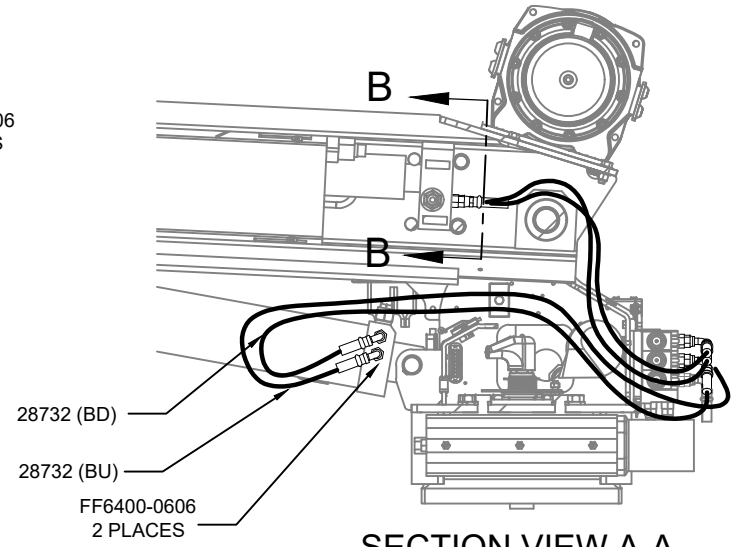

SECTION VIEW A-A

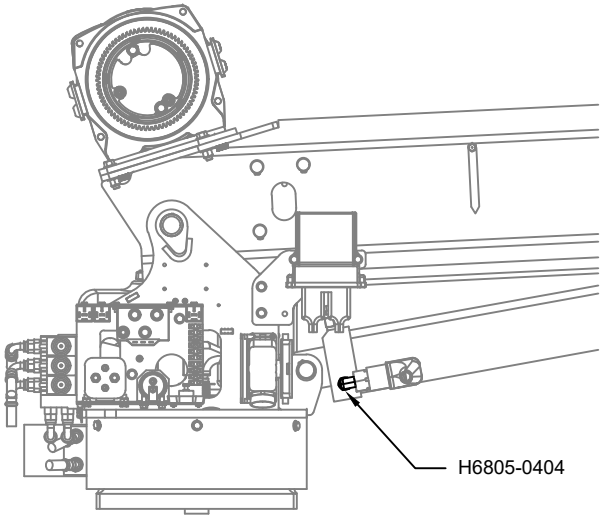

VENTURO® VENCO VENTURO INDUSTRIES LLC CINCINNATI, OHIO	TITLE HYDRAULIC COMPONENTS DRAWING	DATE 05-01-26B	SECTION C400
	45**E/40**E/3516E	SUPERSEDES 03-06-25A	28838

HYDRAULIC COMPONENTS DRAWING

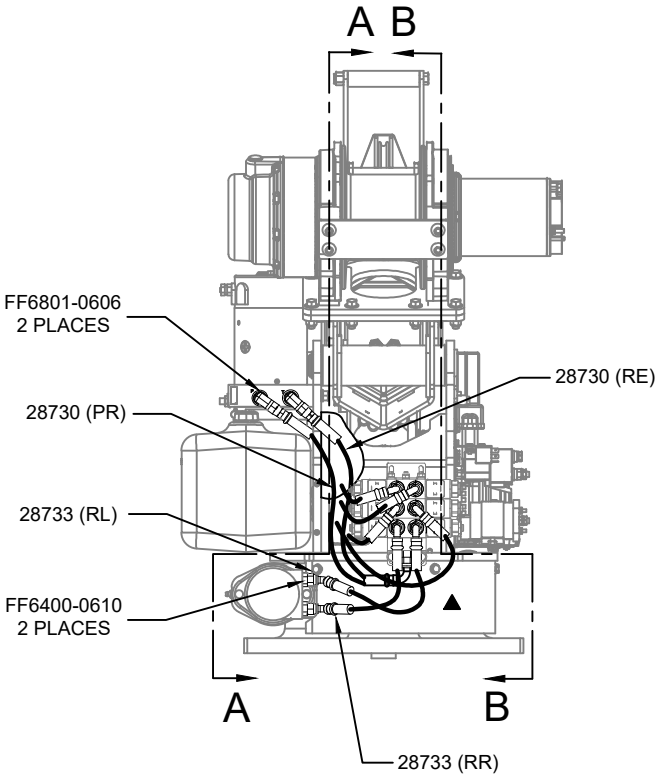

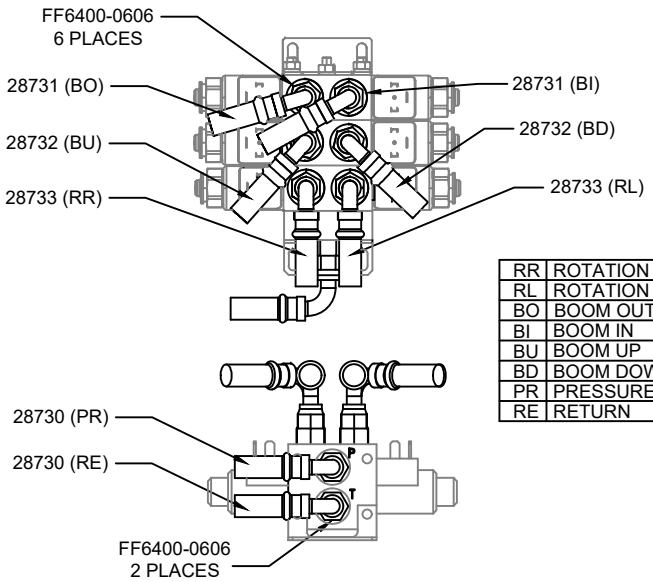

NON-PROPORTIONAL

RR	ROTATION RIGHT
RL	ROTATION LEFT
BO	BOOM OUT
BI	BOOM IN
BU	BOOM UP
BD	BOOM DOWN
PR	PRESSURE
RE	RETURN

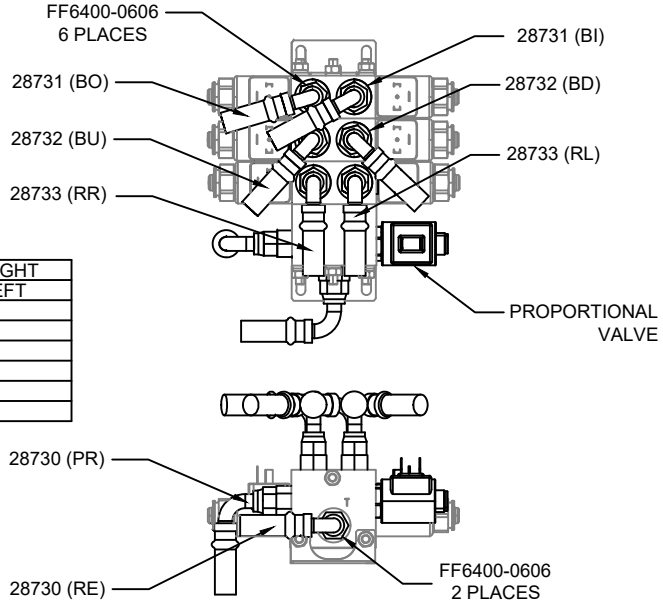

PROPORTIONAL

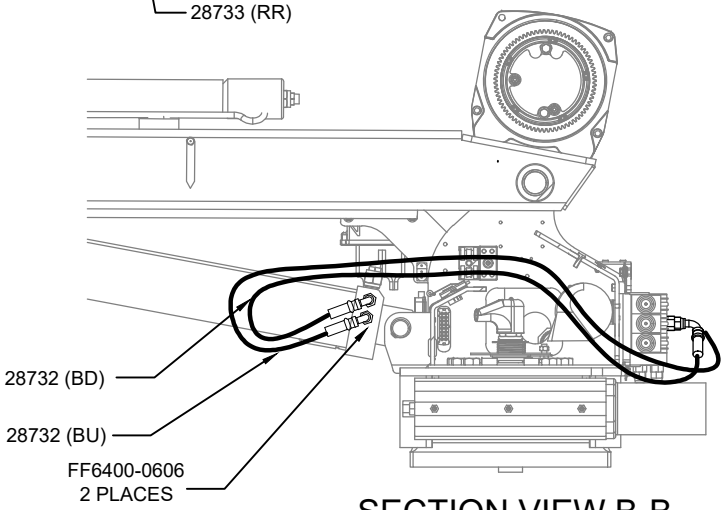

SECTION VIEW B-B

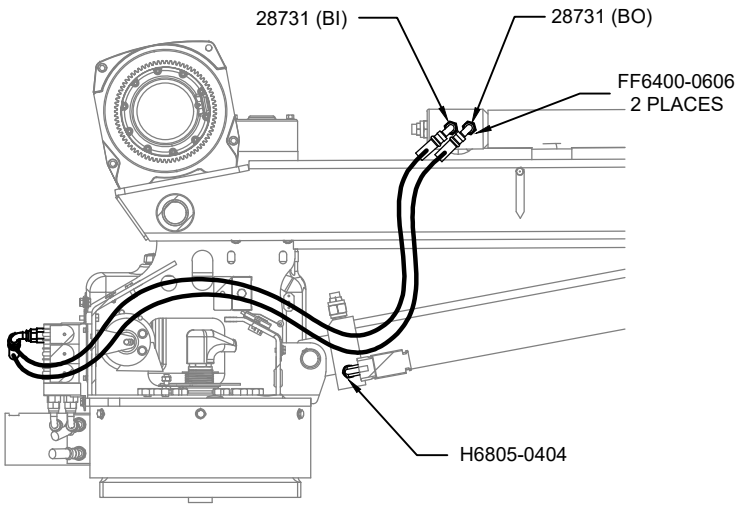

SECTION VIEW A-A

VENTURO®

VENCO VENTURO INDUSTRIES LLC
CINCINNATI, OHIO

TITLE	DATE	SECTION
HYDRAULIC COMPONENTS DRAWING	05-01-26A	C400
3215E/3515E	SUPERSEDES 10-17-24	28980

28800 / 28801 / 28805 VALVE ASSY REPLACEMENT PARTS

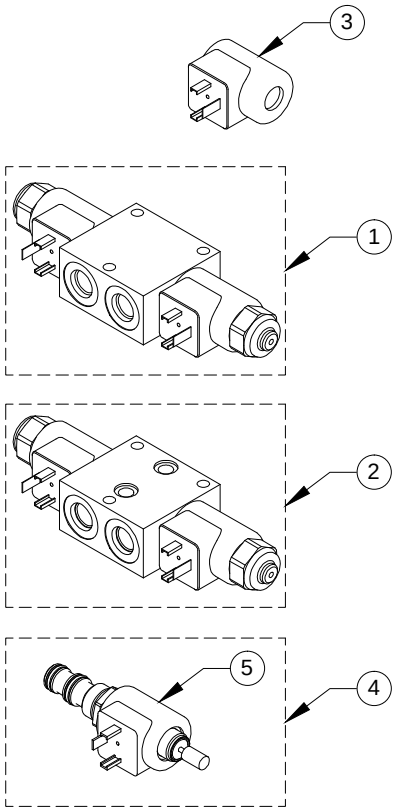

28800
3-SPOOL
PROPORTIONAL

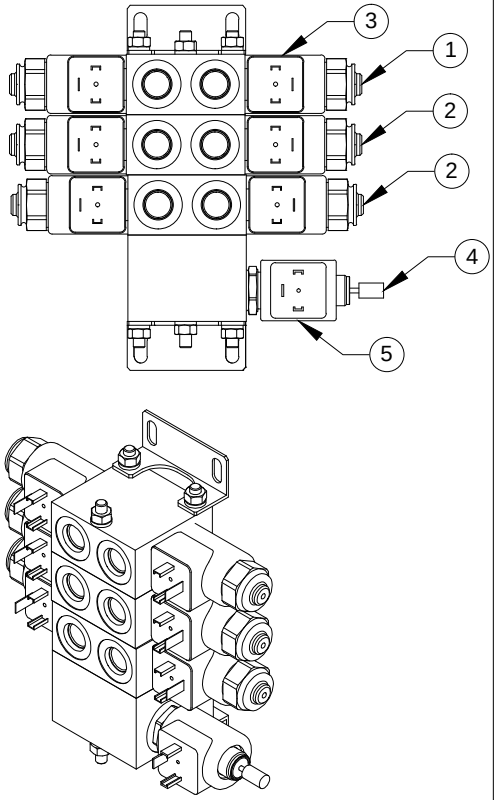

28801
3-SPOOL
NON-PROPORTIONAL

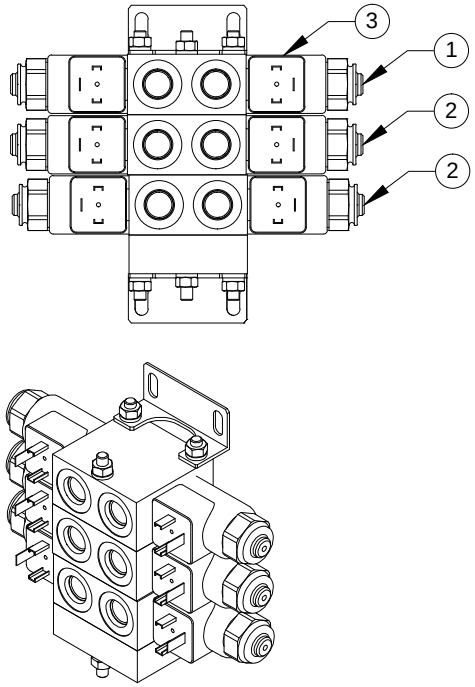

28805
2-SPOOL
NON-PROPORTIONAL

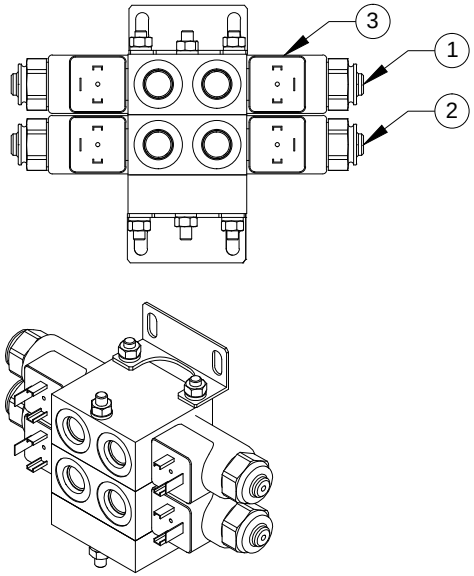

ITEM #	PART #	DESCRIPTION
1	28807	END SECTION W/ SPOOL AND COILS
2	28806	INTERMEDIATE SECTION W/ SPOOL AND COILS
3	▲ 21944	FUNCTION COIL (ONLY)
4	26485	PROPORTIONAL VALVE AND COIL
5	26487	PROPORTIONAL COIL (ONLY)

VENTURO®

VENCO VENTURO INDUSTRIES LLC
CINCINNATI, OHIO

TITLE	DATE	SECTION
28800/28801/28805 REPL PARTS DWG & LIST	10-09-25A	C400
ET CRANES	SUPERSEDES 10-08-25	28808

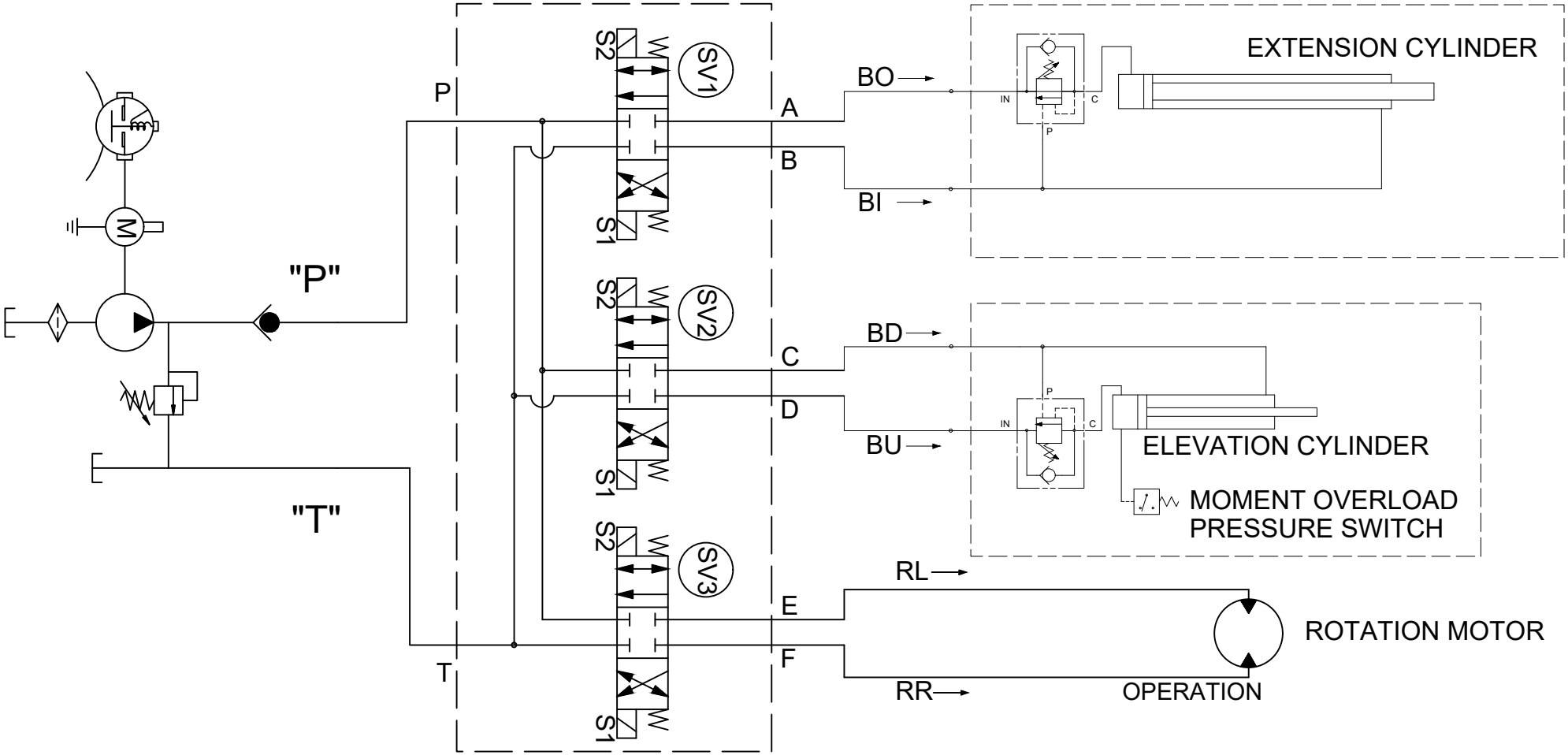

SV1	SV2	SV3
ERNERGIZE "S2"	ENERGIZE "S2"	ENERGIZE "S2"
OPEN FLOW	OPEN FLOW	OPEN FLOW
'P' TO 'A'	'P' TO 'C'	'P' TO 'E'
'B' TO 'T'	'D' TO 'T'	'F' TO 'T'
ENERGIZE "S1"	ENERGIZE "S1"	ENERGIZE "S1"
OPEN FLOW	OPEN FLOW	OPEN FLOW
'P' TO 'B'	'P' TO 'D'	'P' TO 'F'
'A' TO 'T'	'C' TO 'T'	'E' TO 'T'

VENTURO®

VENCO VENTURO INDUSTRIES LLC
CINCINNATI, OHIO

TITLE	DATE	SECTION
HYDRAULIC SYSTEM DIAGRAM	08-11-25A	C400
ET CRANES, NON-PROPORTIONAL ▲	SUPERSEDES 10-03-24	28964

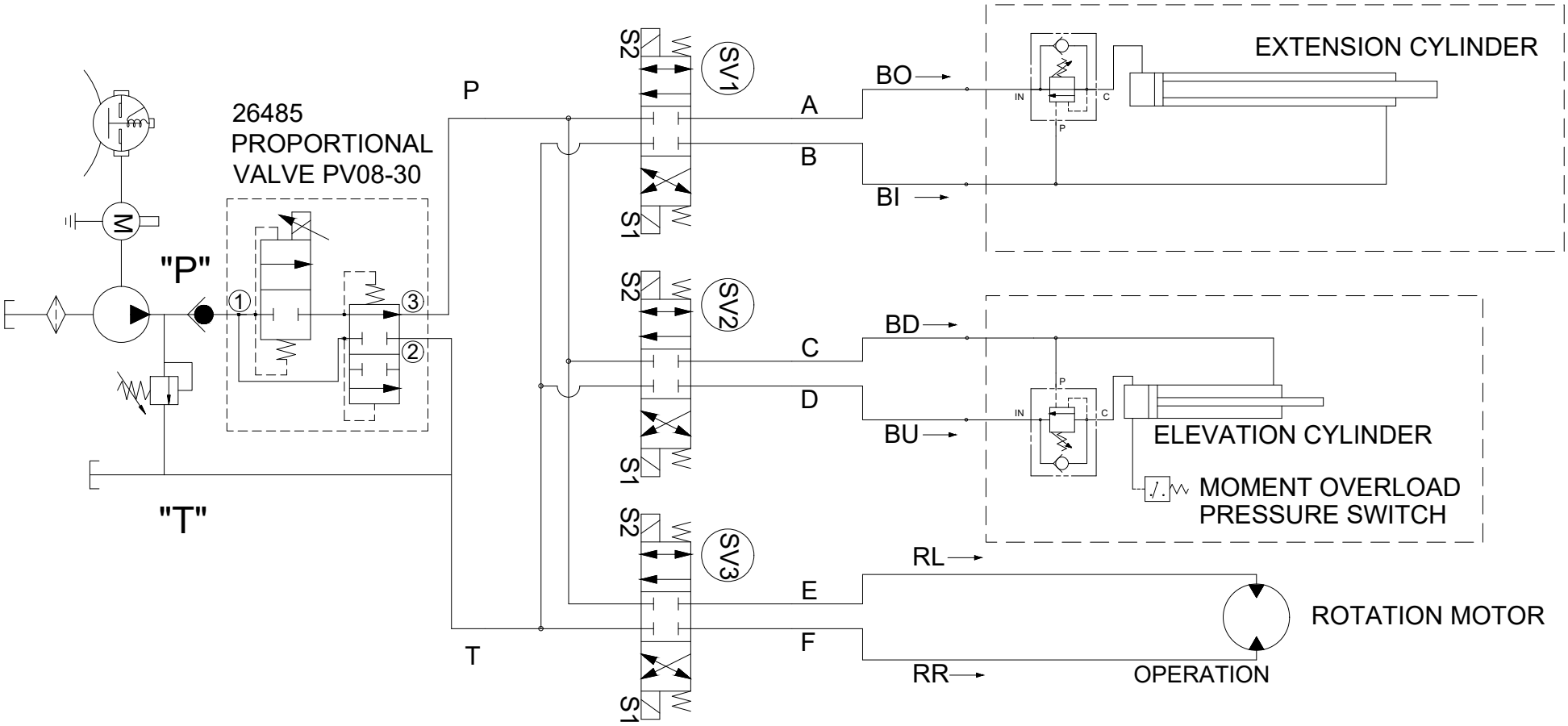

SV1	SV2	SV3
ERNERGIZE "S2"	ENERGIZE "S2"	ENERGIZE "S2"
OPEN FLOW	OPEN FLOW	OPEN FLOW
'P' TO 'A'	'P' TO 'C'	'P' TO 'E'
'B' TO 'T'	'D' TO 'T'	'F' TO 'T'
ENERGIZE "S1"	ENERGIZE "S1"	ENERGIZE "S1"
OPEN FLOW	OPEN FLOW	OPEN FLOW
'P' TO 'B'	'P' TO 'D'	'P' TO 'F'
'A' TO 'T'	'C' TO 'T'	'E' TO 'T'

VENTURO®

VENCO VENTURO INDUSTRIES LLC
CINCINNATI, OHIO

TITLE	DATE	SECTION
HYDRAULIC SYSTEM DIAGRAM	08-11-25A	C400
ET CRANES, PROPORTIONAL ▲	SUPERSEDES 09-13-24	28945

21556 WINCH REPLACEMENT PARTS

WARN DC1600

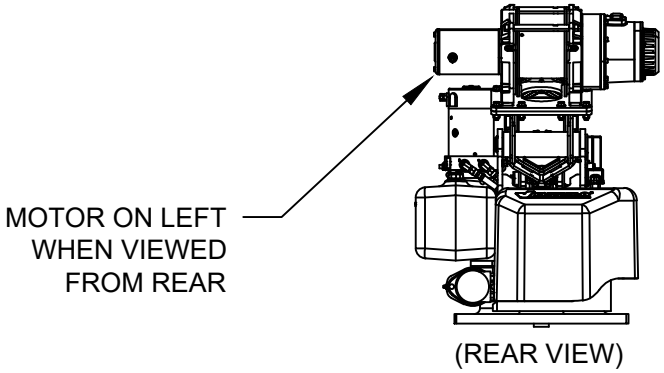

COMEUP GTD-2200

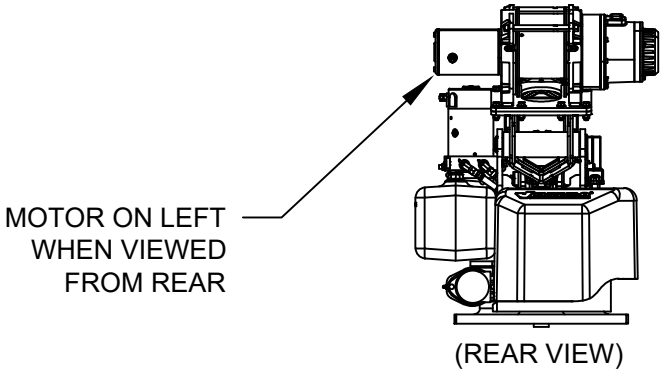

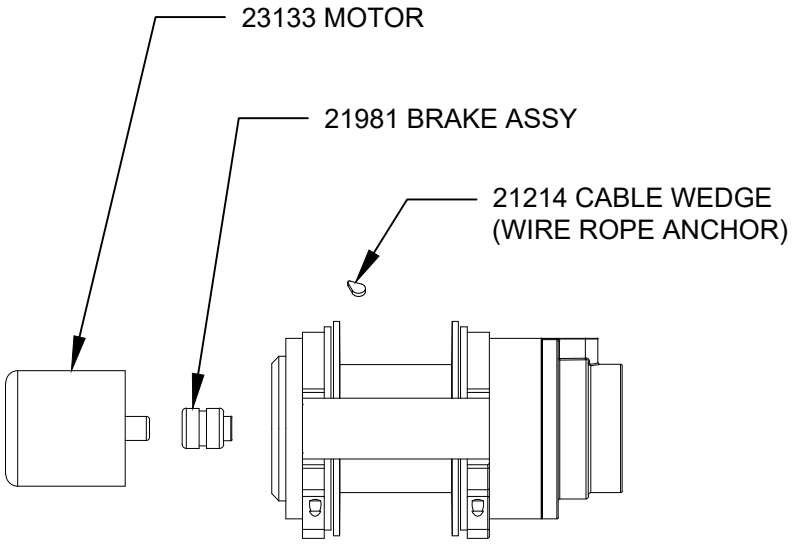

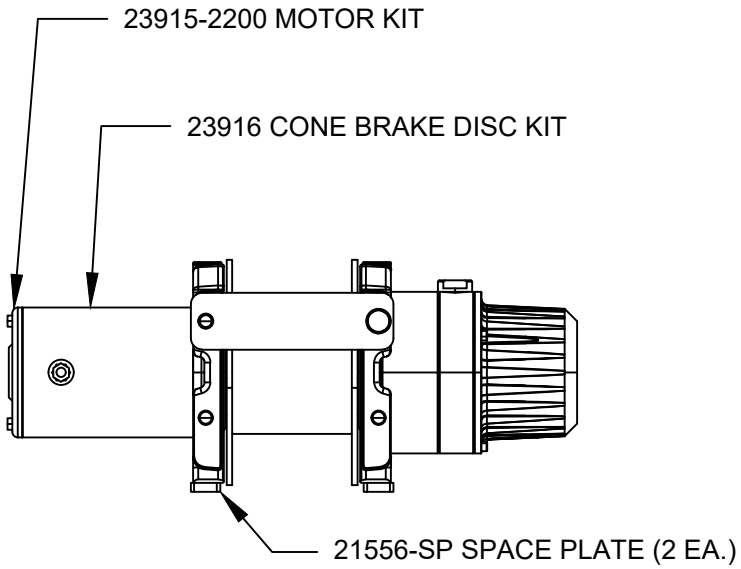

VENTURO®

VENCO VENTURO INDUSTRIES LLC
CINCINNATI, OHIO

TITLE	DATE	SECTION
WINCH REPLACEMENT PARTS	10-15-24	C400
3215E/3515E/3516E	SUPERSEDES -	28928

21735-1 SLEWING SYSTEM REPLACEMENT PARTS

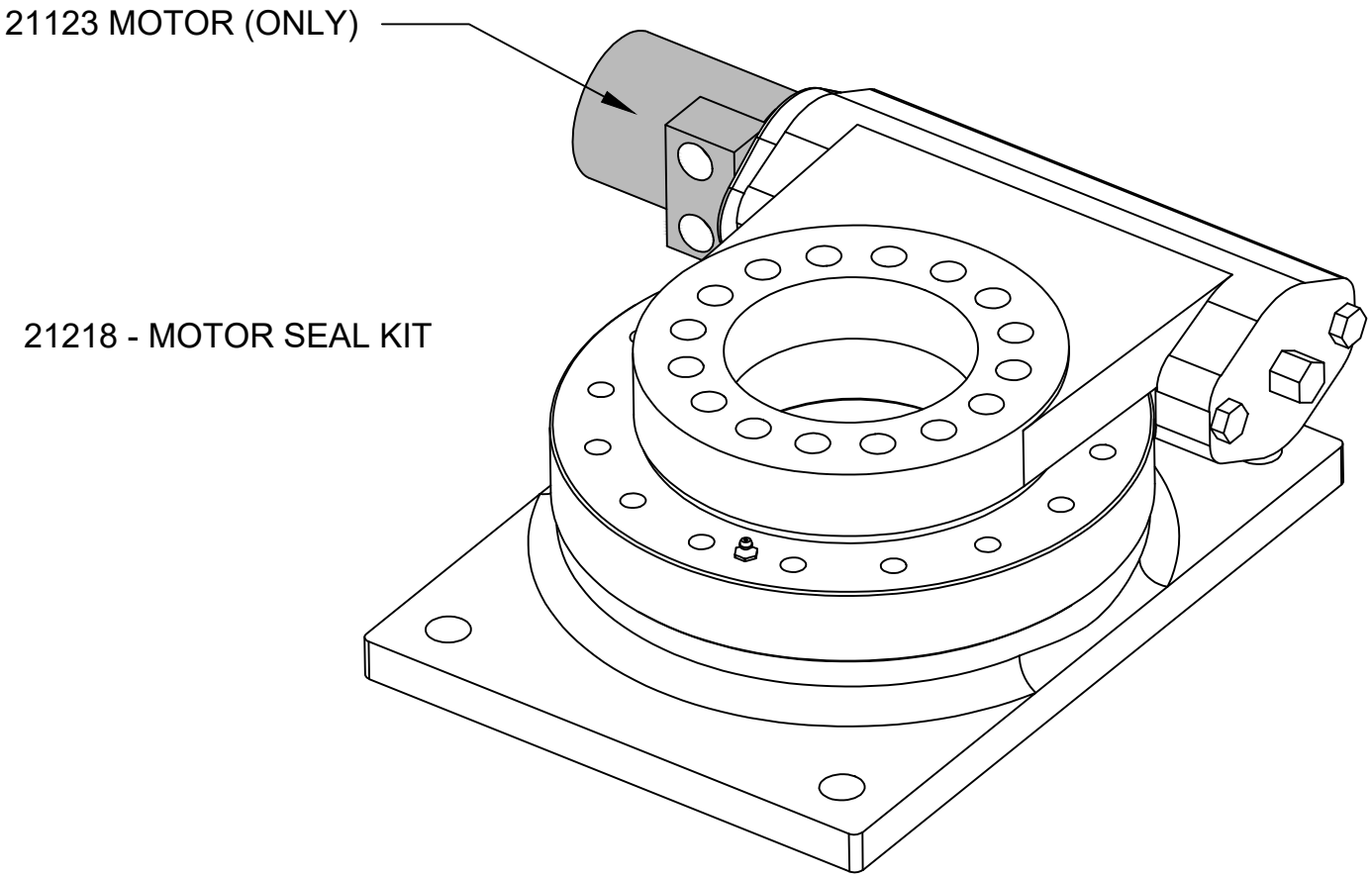

VENTURO®

VENCO VENTURO INDUSTRIES LLC
CINCINNATI, OHIO

TITLE	DATE	SECTION
SLEWING SYSTEM REPLACEMENT PARTS	04-24-24	C400
3215E/351*E/40**E/45**E	SUPERSEDES -	28847

28720 HYD. POWER UNIT REPLACEMENT PARTS

BUCHER

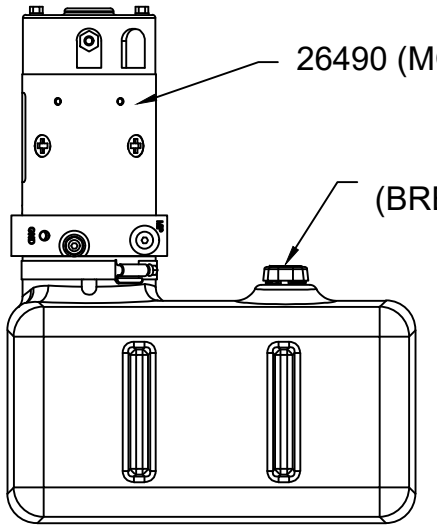

(FRONT VIEW)

KTI

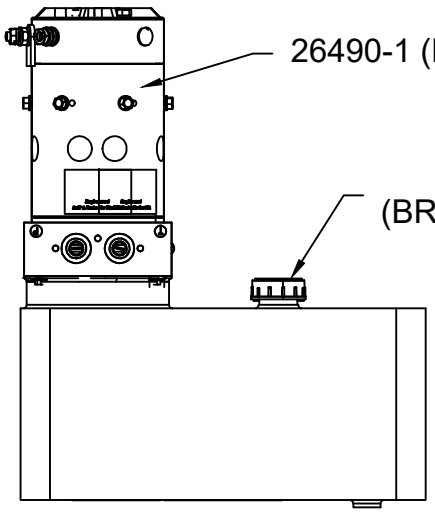

(FRONT VIEW)

BUCHER

28721 ▲
(PLASTIC RESERVOIR)

GROUND CABLE:
02025-2*22.5INX

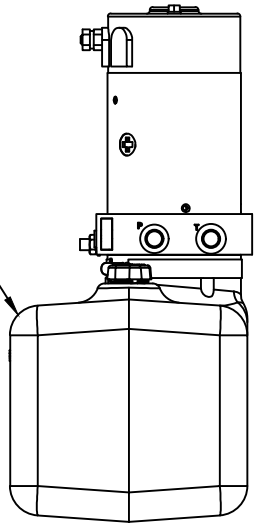

(SIDE VIEW)

KTI

28722 ▲
(STEEL RESERVOIR)

GROUND CABLE:
02025-2*22.5INX

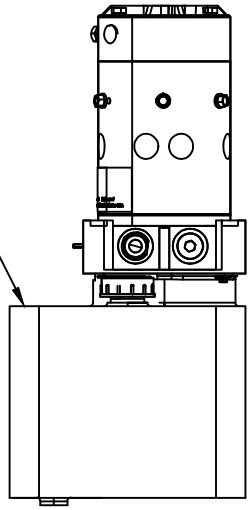

(SIDE VIEW)

VENTURO®

VENCO VENTURO INDUSTRIES LLC
CINCINNATI, OHIO

TITLE	DATE	SECTION
HYDRAULIC POWER UNIT REPLACEMENT PARTS	03-03-26B	C400
ET CRANES	SUPERSEDES 09-23-25B	28848

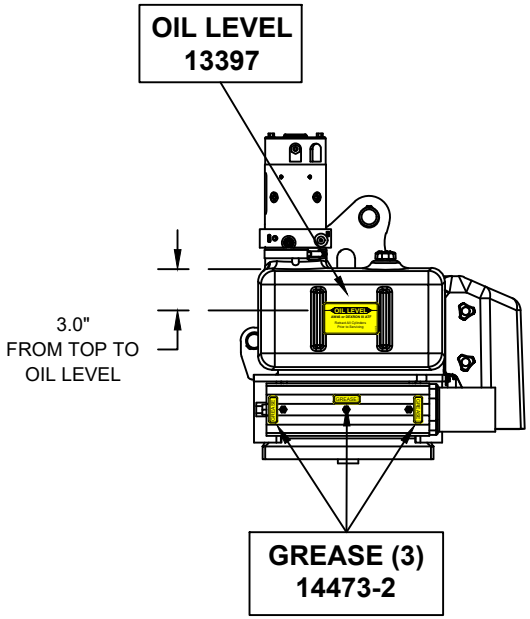

LEFT

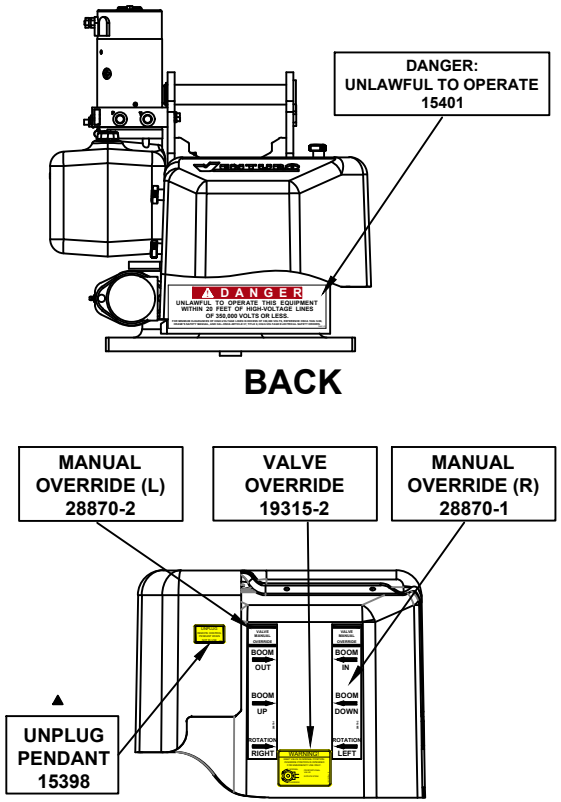

BACK

INSIDE THE COVER

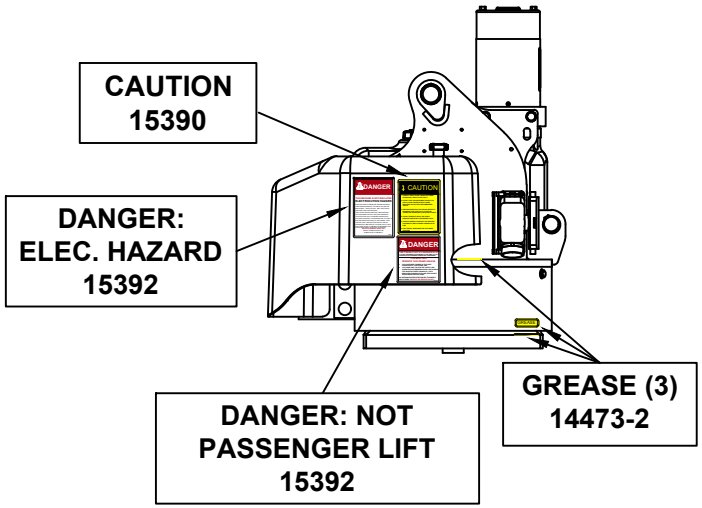

RIGHT

CAPACITY DECALS	
3516E	
RIGHT	28955-1
LEFT	28955-2

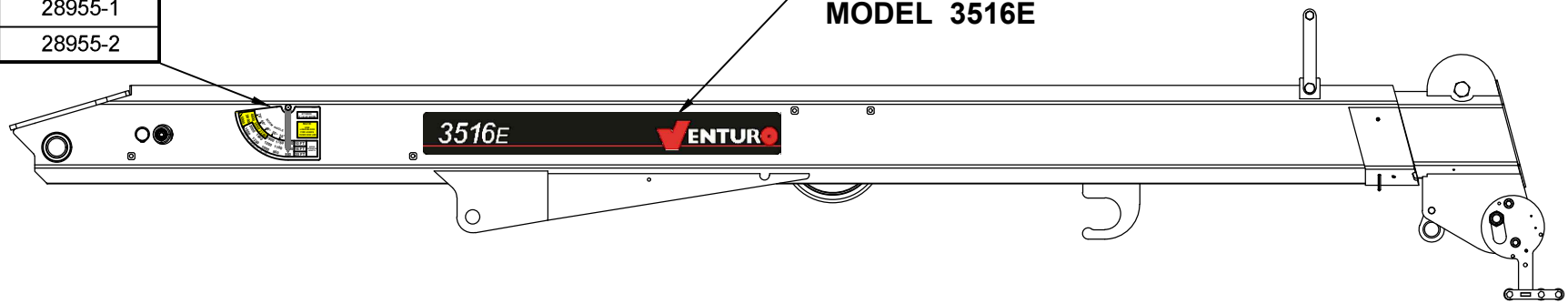

BOOM

VENTURO® VENCO VENTURO INDUSTRIES LLC CINCINNATI, OHIO	TITLE DECAL PLACEMENT	DATE 07-22-25A	SECTION C400
	3516E	SUPERSEDES 09-17-24	28947

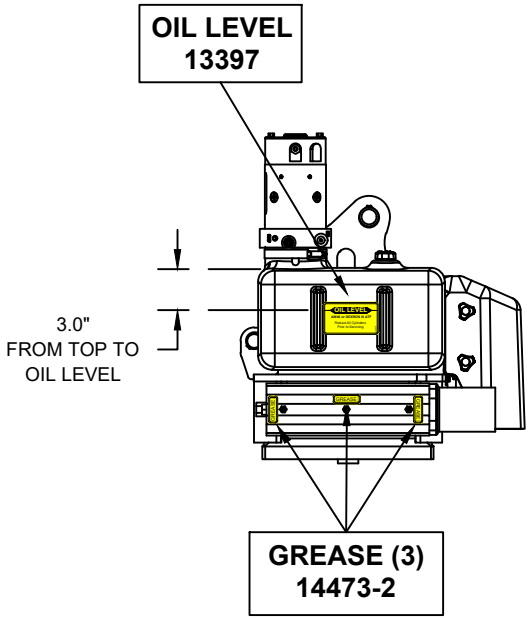

LEFT

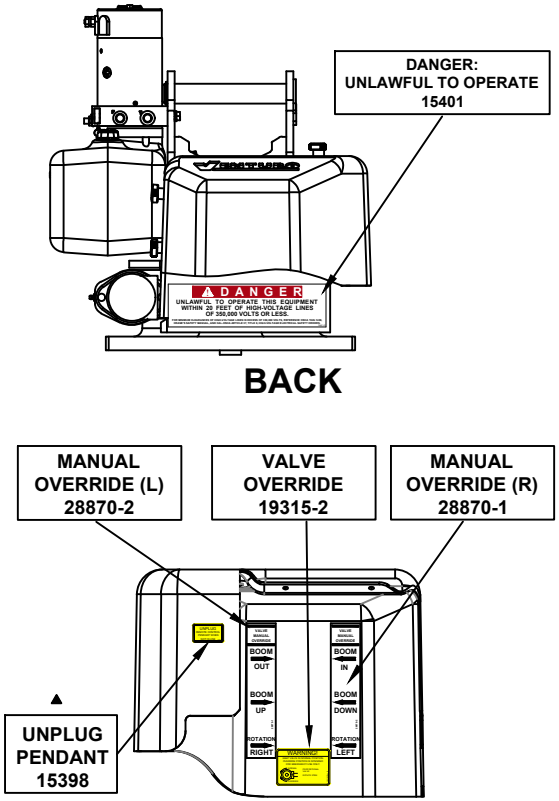

BACK

INSIDE THE COVER

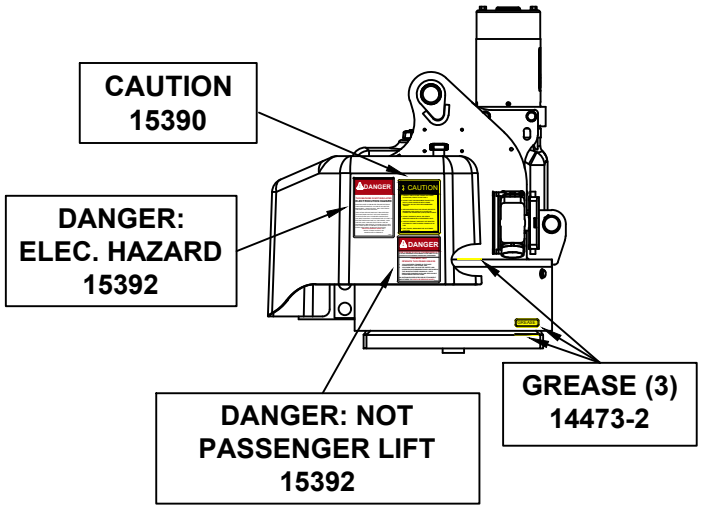

RIGHT

CAPACITY DECALS			
3215E		3515E	
RIGHT	28974-1	RIGHT	28958-1
LEFT	28974-2	LEFT	28958-2

MODEL DECALS	
3215E	3515E
28973	28957

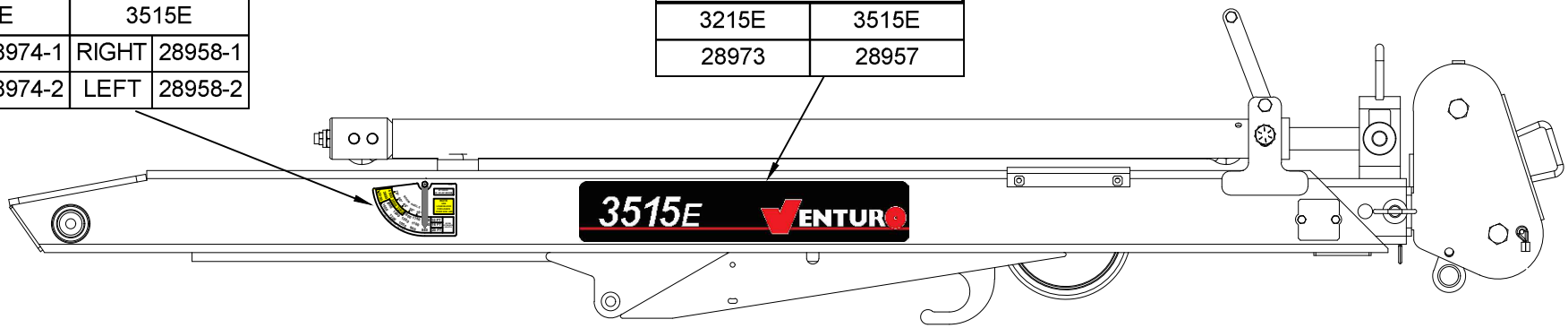

BOOM

VENTURO®

VENCO VENTURO INDUSTRIES LLC
CINCINNATI, OHIO

TITLE	DATE	SECTION
DECAL PLACEMENT	07-22-25B	C400
3215E/3515E	SUPERSEDES 05-19-25A	28965

28948 FIELD SERVICE LABEL KIT

PART NO.	QTY	DESCRIPTION
16184-1	1	DECAL; HORN RELAY
14473-2	6	DECAL; GREASE
28956	2	DECAL; MODEL 3516E
28955-1	1	DECAL; BOOM CAPACITY, RIGHT, 3516E BOOM
28955-2	1	DECAL; BOOM CAPACITY, LEFT, 3516E BOOM
13397	1	DECAL; OIL LEVEL
28870-1	1	DECAL; DIRECTIONAL VALVE, MANUAL OVERRIDE, RIGHT
28870-2	1	DECAL; DIRECTIONAL VALVE, MANUAL OVERRIDE, LEFT
19315-2	1	DECAL; PROPORTIONAL VALVE MANUAL OVERRIDE
28949	1	IDWG; FIELD SERVICE LABEL KIT
28947	1	IDWG; DECAL PLACEMENT
INST-23233	1	SAFETY MANUAL; VENTURO CRANES
15397	1	KIT; ACCIDENT PREVENTION SIGNS

FIELD SERVICE LABEL KIT; 3515E

PART NO.	QTY.	DESCRIPTION
16184-1	1	DECAL; HORN RELAY
14473-2	6	DECAL; GREASE
28957	2	DECAL; VENTURO, 3515E
28958-1	1	DECAL; BOOM CAPACITY, RIGHT, 3515E
28958-2	1	DECAL; BOOM CAPACITY, LEFT, 3515E
13397	1	DECAL; OIL LEVEL
28870-1	1	DECAL; MANUAL OVERRIDE, RIGHT
28870-2	1	DECAL; MANUAL OVERRIDE, LEFT
17813	1	DECAL; OVERLOAD SENSING SYSTEM
28967	1	IDWG; FIELD SERVICE LABEL KIT LIST
28965	1	IDWG; DECAL PLACEMENT
INST-23233	1	SAFETY MANUAL, VENTURO CRANES
15397	1	KIT; FIELD SERVICE LABELS

VENTURO CRANES LIMITED WARRANTY POLICY

Venturo products are built to last…we guarantee them.
As a purchaser of any new Venturo product covered by warranty, you will receive 1 year of the most complete coverage available…and, at no added cost to you.

1-Year Limited Warranty Policy

This limited policy warrants new products of Venturo to be free from defects in material and workmanship for a period of one (1) year from date of original installation. OEM products or accessories purchased by Venturo as part of or offered with our product will carry the OEM manufacturer's respective warranty. Our warranty covers:

- ***Repair or replacement of product***
- ***Labor to repair or replace product***
- ***Freight to return and/or replace product***

We shall not be liable for any contingent liabilities arising out of the improper function of any products. Warranty shall become void if the product is improperly installed, modified, damaged, abused or used for application other than intended use. There is no warranty of merchantability, fitness for a particular purpose, warranty arising from course of dealing or usage of trade, or any other implied or expressed warranty, except as made specifically herein. This warranty supersedes all previous warranties, written or implied.

Warranty Claims

Venco Venturo Industries LLC will make a good faith effort for prompt correction or other adjustment with respect to any product, which proves to be defective after our inspection and within the warranty period. Before any repairs are attempted or before returning any product, your Venturo Distributor is required to obtain a warranty claim number. This number is necessary for any claim to be considered. To obtain a warranty claim number, Venturo requires the model and serial number. Only authorized Venturo Distributors can perform warranty. For the name and address of your local Venturo Distributor call the **Warranty Claim Department - 513-772-8448.**

WARNING - It is the responsibility of the installer to ensure the installation is completed according to the manufacturer's recommendations, ensure the ultimate user understands how to operate product in a safe manner, and understands the need for regular service and maintenance by an authorized Venturo Distributor. No modifications or alterations may be made to any Venturo product without the expressed written consent of Venco Venturo Industries LLC. Installation of any Venturo product must be done by an authorized Venturo Distributor, to the standards of the industry; including maintenance, service and affixing of all instruction, safety and warning decals. Users should be instructed as to the safe operation at time of delivery. Maintenance, service, operation and safety warning decals are available on request from Venco Venturo Industries LLC.

VENCO VENTURO INDUSTRIES LLC
12110 BEST PLACE | CINCINNATI, OHIO 45241
P: 800-226-2238 | F: 513-326-5427
www.venturo.com